Class 14

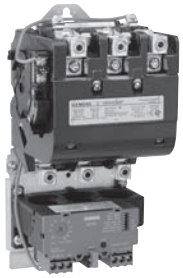

Class 17, 18

Class 82, 83, 84, 87, 88

Class LE, LC, CLM

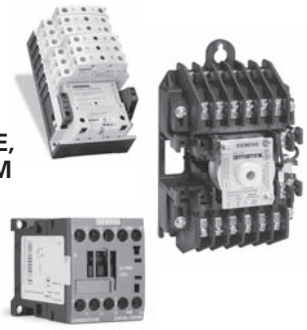

contents

Product Overview	9/3
Manual Control	
Fractional HP Starters, Class SMF	9/4 - 9/5
Switches, Class MMS and MRS	9/6 - 9/7
Starters and Switches, Class 11 - 3RV	9/8 - 9/9
NEMA Control	
Catalog Numbering System	9/10
Non-Combination Starters Features and Benefits	9/11 - 9/12
Non-Reversing Starters, Class 14	9/13 - 9/15
Combination Starters Features and Benefits	9/16
Combination Starters, Class 17 and 18	9/17 - 9/25
Reversing Starters, Class 22	9/26 - 9/27
Combination Reversing Starters, Class 25 and 26	9/28 - 9/29
Two Speed Starters Features and Benefits	9/30
Two Speed Starters, Class 30	9/31 - 9/34
Combination Two Speed Starters, Class 32	9/35 - 9/42
Reduced Voltage Control	
Reduced Voltage Features and Benefits	9/43
Auto Transformer Starters, Class 36 and 37	9/44 - 9/47
Part Winding Starters, Class 36 and 37	9/48 - 9/51
Wye Delta Open Transition, Class 36 and 37	9/52 - 9/55
Wye Delta Closed Transition, Class 36 and 37	9/56 - 9/59
Heavy Duty Contactors	
Non-Reversing Contactors, Class 40	9/60 - 9/61
Vacuum Contactors,	9/60
Reversing Contactors, Class 43	9/62
Overload Relays	
Class 3UB8, 48, 958 and 3RB20	9/64 - 9/67
Duplex Controllers	
Features and Benefits	9/72
Non Combination, Class 83	9/73
Combination, Class 84	9/74 - 9/75
Pump Control Panels	
Slim Line NEMA Pump Controller for the Agricultural industry, Class 82	9/68 - 9/71
Class 87 and 88 Features and Benefits	9/76 - 9/77
Full-Voltage Type, Class 87	9/78 - 9/79
Vacuum Starter Type, Class 87	9/80
Reduced-Voltage Type, Class 88	9/81 - 9/82
Lighting Control	
Electrically Held Contactors, Class LE	9/83 - 9/88
Electrically Held Contactors, Class LC	9/89 - 9/93
Mechanically Held Contactors, Class CLM	9/94 - 9/96
Control Power Transformers	
Domestic and International (UL, CSA, CE) Class MT, MTG	9/97 - 9/101
Modifications and Drawings	
Field Modification Kits	9/102 - 9/112
Enclosure Kits	9/113 - 9/118
Factory Modifications	9/119 - 9/123
Dimensions	9/137 - 9/171
Wiring Diagrams	9/172 - 9/193
Heater Tables and Replacement Parts	
Overload Relay Heater Tables	9/124 - 9/130
NEMA Coils and Contact Kits	9/131 - 9/132
Coil VA Ratings and Overload Relays	9/133
Lighting Contactor Parts and Kits	9/134

Starters at the speed you need

Siemens NEMA starters, pump panels and lighting contactors are known for their dependability and ruggedness, and now they are delivered faster than ever before through Controls Express.

Controls Express puts our most popular products in your hands faster, because we stock more products across our entire product line. Our Class 14 NEMA starters, Class 87 pump panels, and LC & LE lighting contactors are now available in stock for immediate or next day shipping. In addition, thousands of our open and enclosed starters can now be built-to-order and shipped in 1-3 days through Controls Express.

Siemens is committed to making your job easier by stocking more products, offering more configurations, expediting factory modifications, and delivering industry leading turnaround times on our most requested control products.

To quickly identify products that are part of Controls Express and therefore available in 3 days or less, applicable catalog numbers have a light blue background. See the appropriate selection pages listed below.

Class 14 NEMA Starters see pages 9/13 & 9/15

Class 17 NEMA Combination Starters see pages 9/17 to 9/22. For quick ship versions with factory modifications see on-line at www.usa.siemens.com/controls-express

Class 18 NEMA Combination Starters see pages 9/23 & 9/25.

Class 40 NEMA Contactors see page 9/60

Class 87 Pump Panels see pages 9/78 & 9/79

LE Lighting Contactors see page 9/85

LC Lighting Contactors see page 9/91 & 9/92

Controls Express lead times apply to orders of up to 6 units of the Class 14, Class 87, LC, or LE. Please contact customer service at 1-866-663-7324 for lead times of larger order volumes.

For more information on Controls Express and a complete list of available products, please visit our website at www.usa.siemens.com/controls-express

NEMA & General Purpose Controls

Product Overview

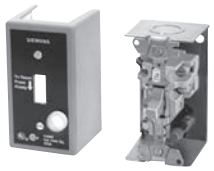

Class SMF
Fractional Horsepower
Manual Starters
Page 9/4

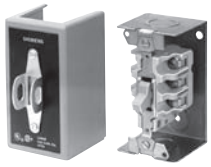

Class MMS & MRS
Fractional Horsepower
Manual Switches
Page 9/6

Class 11
Manual Starters and
Switches
Page 9/8

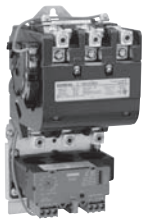

Class 14
NEMA Starters
Page 9/13

Class 17, 18
NEMA Combination
Starters
Page 9/17

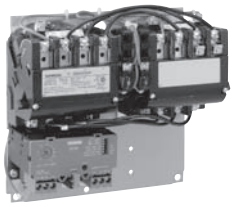

Class 22
NEMA Reversing
Starters
Page 9/26

Class 25, 26
NEMA Combination
Reversing Starters
Page 9/28

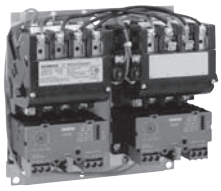

Class 30
NEMA Multi-Speed
Starters
Page 9/31

Class 32
NEMA Combination
Multi-Speed Starters
Page 9/35

Class 36, 37
Reduced Voltage
Electromechanical
Starters
Page 9/43

Class 40
NEMA Contactors
and Vacuum Contactors
Page 9/60

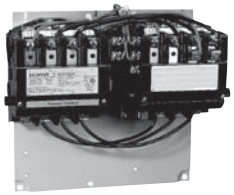

Class 43
NEMA Reversing
Contactors
Page 9/62

Class 48, 958, 3RB20
Overload Relays
Page 9/63

**Class 82, 83, 84,
87, 88**
Pump Controls
Page 9/68

Class LE, LC, CLM
Lighting Contactors
Page 9/83

Class MT, MTG
Control Power
Transformers
Page 9/97

Modifications and
Drawings
Page 9/102

Heater Tables and
Replacement Parts
Page 9/124

Class SMF

Class SMF fractional horsepower starters provide overload protection as well as manual on-off control for small horsepower motors in a variety of industrial and commercial applications. Available in one or two pole versions, these devices are suitable for use with AC single phase motors up to 1 HP. Two pole starters can also be used with DC motors up to ¾ HP. Typical applications include fans, conveyors, pumps, and small machine tools.

Continuous Current Rating

16 amperes.

Overload Trip Assembly

Motor protection is provided by a Class SMFH heater element which must be installed before the starter will operate.

Two Speed Starters

Two speed manual starters are designed for control of small single phase AC motors having separate windings for high and low speed operation. Two toggle operated starters are used, with overload protection included for each motor winding. Surface mounting devices, and those with a gray flush plate, utilize a mechanical interlock which allows direct control of the motor by means of the toggle operators.

Enclosures

Class SMF, NEMA Type 1 surface mounting enclosures are sheet steel with a thermo-plastic wrap-around cover for convenience in wiring. The NEMA Type 1 enclosure is also available in an oversized version which allows more wiring space. A zinc alloy die casting is used for NEMA Type 4 enclosures.

Pilot Lights

Red or green neon pilot light units are available for flush mounting plates, NEMA Type 1 enclosures, and NEMA Type 4 enclosures. Pilot lights may be either factory or field installed. (For starters that contain a pilot light, a Red light is standard. For a Green pilot light add "G" to the end of the catalog number.)

Terminals

Binding head screw type terminals are suitable for #10 or smaller copper wire, and are accessible from the front. All terminals are clearly marked.

Mounting

Open types without a pilot light fit standard single gang switch boxes, and can be used with any cover plate having a standard toggle cutout. Single-unit flush mounting types, including those with pilot lights, are suitable for wall mounting in a standard switch box or for machine cavity mounting without a box.

Operation

Available with toggle handle or with removable key type operator to discourage unauthorized operation.

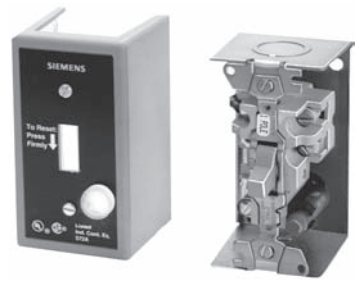

Class SMF Starter in a NEMA Type 1 Enclosure with Pilot Light

Emergency Off Actuator

A toggle operator extender is available for Class SMF, NEMA Type 1 surface mounted units. The extender has a red vinyl button that provides a fast and easy method for locating and switching the device's toggle operator into the OFF position. The Emergency Off Actuator is available in kit form only for field installation.

Handle Guard/Lock-Off

An optional handle guard on Class SMF, NEMA Type 1 enclosed starters prevents accidental operation of the toggle operator and also allows the toggle operator to be padlocked in either the "ON" or "OFF" position. This handle guard can be factory installed on NEMA Type 1 enclosed starters and is also available in kit form for field installation on NEMA Type 1 surface and flush mounting enclosures. Standard NEMA Type 4 metallic enclosures include provisions for padlocking the device in the OFF position.

Fractional HP Starters with Melting Alloy Overload, Class SMF

Selection

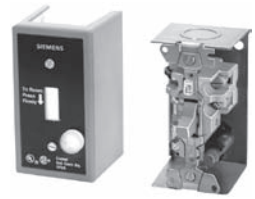

Class SMF Starter in a NEMA Type 1 Enclosure with Pilot Light

Ordering Information

- ► Heater Elements see page 9/124.
- ► Field Modification Kits see page 9/102.
- ► Dimensions see page 9/137.
- ► Wiring Diagrams see page 9/172.

Horsepower Ratings

Volts	Maximum Horsepower: AC Single Phase 1-Pole	AC Single Phase 2-Pole	DC 2-Pole
115	1	1	¾
230	1	2	¾
277	1	1	—

Starter—Class SMF, Single Phase①

Type of Operator	No. of Poles	Starter Features⑤	Open Type Catalog Number	Open Type List Price$	General Purpose Flush Mounting Open Starter with Flush Plate (No Enclosure Provided): Gray Flush Plate Catalog Number	Gray Flush Plate List Price$	Standard Stainless Steel Flush Plate Catalog Number	Standard Stainless Steel Flush Plate List Price$	Jumbo Stainless Steel Flush Plate Catalog Number	Jumbo Stainless Steel Flush Plate List Price$	NEMA Type 1 General Purpose Enclosure, Surface Mounting: Standard Catalog Number	Standard List Price$	Oversized Catalog Number	Oversized List Price$	NEMA Type 3R, 4 & 12 Watertight, Dust-tight Metallic Enclosure with Clear Cover Catalog Number	NEMA Type 3R, 4 & 12 List Price$	NEMA Type 4 Watertight, Dust-tight Metallic Enclosure Catalog Number	NEMA Type 4 List Price$	NEMA Type 3R, 7 & 9 Div 1 and Div 2 Class I Groups B, C, D & Class II Groups E, F, G Enclosures Catalog Number	NEMA Type 3R, 7 & 9 List Price$
Toggle	1	Standard	SMFF01		SMFFF1		SMFFS1		—	—	SMFFG1		SMFFGJ1		SMFFWN1		—	—	—	—
		Red Pilot Light	SMFF01P		SMFFF1P		SMFFS1P		SMFFSJ1P		SMFFG1P		SMFFGJ1P				—	—	—	—
	2	Standard	SMFF02		SMFFF2		SMFFS2		—	—	SMFFG2		SMFFGJ2		SMFFWN2		—	—	—	—
		Red Pilot Light	SMFF02P		SMFFF2P		SMFFS2P		SMFFSJ2P		SMFFG2P		SMFFGJ2P				—	—	—	—
Key	1	Standard	SMFF03		SMFFF3		SMFFS3		—	—	SMFFG3		SMFFGJ3		SMFFWN3		—	—	—	—
		Red Pilot Light	SMFF03P		SMFFF3P		SMFFS3P		SMFFSJ3P		SMFFG3P		SMFFGJ3P				—	—	—	—
	2	Standard	SMFF04		—	—	SMFFS4		—	—	SMFFG4		SMFFGJ4		SMFFWN4		—	—	—	—
		Red Pilot Light	SMFF04P		SMFFF4P		SMFFS4P		SMFFSJ4P		SMFFG4P		SMFFGJ4P				—	—	—	—

Starter With Handle Guard/Lock-Off—Class SMF, Single Phase①

Toggle	1	Standard	—	—	④	—	④	—	④	—	SMFFG5		SMFFGJ5		—	—	SMFFW1②		SMFFR1②	
		Red Pilot Light	—	—	④	—	④	—	④	—	SMFFG5P		SMFFGJ5P		—	—	SMFFW1P②		—	—
		(2) ¾" NPT Outlets	—	—	④	—	④	—	④	—	—	—	—	—	—	—	SMFFW1H		SMFFR1H	
		(2) ¾" NPT Outlets and Red Pilot Light	—	—	④	—	④	—	④	—	—	—	—	—	—	—	SMFFW1PH		—	—
	2	Standard	—	—	④	—	④	—	④	—	SMFFG6		SMFFGJ6		—	—	SMFFW2②		SMFFR2②	
		Red Pilot Light	—	—	④	—	④	—	④	—	SMFFG6P		SMFFGJ6P		—	—	SMFFW2P②		—	—
		(2) ¾" NPT Outlets	—	—	④	—	④	—	④	—	—	—	—	—	—	—	SMFFW2H		SMFFR2H	
		(2) ¾" NPT Outlets and Red Pilot Light	—	—	④	—	④	—	④	—	—	—	—	—	—	—	SMFFW2PH		—	—

One Starter in Duplex Enclosure—Class SMF, Single Phase①

Type of Operator	Number of Poles	Starter Features⑤	General Purpose Flush Mounting Open Starter with Flush Plate - (No Enclosure Provided): Gray Flush Plate For Wall or Cavity Mounting Catalog Number	Gray Flush Plate List Price $	Stainless Steel Flush Plate for Wall or Cavity Mounting Catalog Number	Stainless Steel Flush List Price $	NEMA Type 1 General Purpose Enclosure Surface Mounting Catalog Number	NEMA Type 1 List Price $	Replacement Starters Catalog Number	Replacement Starters List Price $
Toggle	2	Standard	—	—	—	—	SMFFG02		—	—
		Red Pilot Light	—	—	—	—	SMFFG02P		—	—
Key	2	Red Pilot Light	—	—	—	—	SMFFG04P		—	—

Two Starters In Duplex Enclosure—Class SMF, Single Phase③

Toggle	2 Per Starter	Standard	SMFFF222		—	—	SMFFG222		—	—
		Red Pilot Light on Each Starter	SMFFF222P		—	—	SMFFG222P		—	—
Key	2 Per Starter	Red Pilot Light on Each Starter	SMFFF44P		SMFFS44P		SMFFG44P		—	—

Starter And "Auto-Off-Hand" SPDT Selector Switch (AC Only)—Class SMF, Single Phase①

Toggle	1	Standard	SMFFF71		—	—	SMFFG71		—	—
		Red Pilot Light	SMFFF71P		SMFFS71P		SMFFG71P		—	—
	2	Standard	—	—	—	—	SMFFG72		—	—
		Red Pilot Light	SMFFF72P		SMFFS72P		SMFFG72P		—	—
Key	2	Red Pilot Light	SMFFF74P		SMFFS74P		SMFFG74P		—	—

Two Speed Starters (AC Only)—Class SMF, Single Phase③

Toggle	1	Mechanical Interlock	SMFFF11		—	—	SMFFG11		SMFF01T	
		Mechanical Interlock and (2) Red Pilot Lights	SMFFF11P		—	—	SMFFG11P		SMFF01PT	
		Mechanical Interlock, HIGH-OFF-LOW Selector Switch and (2) Red Pilot Lights	—	—	—	—	—	—	SMFF01PT	
	2	Mechanical Interlock	SMFFF22		—	—	SMFFG22		—	—
		Mechanical Interlock and (2) Red Pilot Lights	SMFFF22P		—	—	SMFFG22P		SMFF02PT	
		Mechanical Interlock, HIGH-OFF-LOW Selector Switch and (2) Red Pilot Lights	—	—	SMFFS202P		—	—	SMFF02PT	

① One heater element required.
② Furnished with (1) ¾" NPT Outlet in bottom (reversible for top feed).
③ Two heater elements required.
④ Order Open Type starter plus separate handle guard kit.
⑤ For starters that contain a pilot light, a Red light is standard. For a Green pilot light add "G" to the end of the catalog number.

Class MMS, MRS

Class MMS and MRS motor starting switches provide manual "ON-OFF" control of single or three phase AC motors where overload protection is not required or is provided separately. Compact construction and a 600 volt rating make these switches suitable for a wide range of industrial and commercial uses. Typical applications include small machine tools, pumps, fans, conveyors and many other types of electrical machinery. They can also be used on non-motor loads such as resistance heating applications.

Continuous Current Rating

MMS & MRS: 30 amperes at 250 volts max, 26.4 amperes at 277 volts, 20 amperes at 600 volts max, 30 amperes resistive at 600 volts max.

Two Speed—Class MRS

Two speed manual switches may be used with separate winding three phase or single phase AC motors where overload protection is not required or is provided separately. Two switches are employed to give "ON-OFF" control in each speed.

Reversing—Class MRS

Reversing manual switches provide a compact means of starting, stopping and reversing AC motors where overload protection is not required or is provided separately. They are suitable for use with three phase squirrel cage motors and for single phase motors which can be reversed by reconnecting motor leads. Two switches are used, one to connect the motor forward rotation and one for reverse.

Enclosures

Class MMS, MRS, NEMA Type 1 surface mounting enclosures are sheet steel with a thermo-plastic wrap-around cover for convenience in wiring. The NEMA Type 1 enclosure is also available in an oversized version which allows more wiring space. A zinc alloy die casting is used for NEMA Type 4 enclosures.

Pilot Lights

Red or green neon pilot light units are available for flush mounting plates, NEMA Type 1 enclosures, and NEMA Type 4 enclosures. Pilot lights may be either factory or field installed. (For switches that contain a pilot light, a Red light is standard. For a Green pilot light add "G" to the end of the catalog number.)

Terminals

Binding head screw type terminals are suitable for #10 or smaller copper wire, and are accessible from the front. All terminals are clearly marked.

Mounting

Open types without a pilot light fit standard single gang switch boxes, and can be used with any cover plate having a standard toggle cutout. Single-unit flush mounting types, including those with pilot lights, are suitable for wall mounting in a standard switch box or for machine cavity mounting without a box.

Operation

Available with toggle handle or with removable key type operator to discourage unauthorized operation.

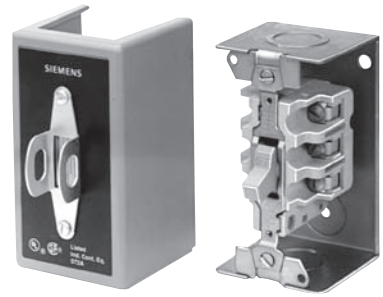

Class MMS Switch in a NEMA Type 1 Enclosure

Emergency Off Actuator

A toggle operator extender is available for Class MMS, MRS, NEMA Type 1 surface mounted units. The extender has a red vinyl button that provides a fast and easy method for locating and switching the device's toggle operator into the OFF position. The Emergency Off Actuator is available in kit form only for field installation.

Handle Guard/Lock-Off

An optional handle guard on Class MMS, MRS, NEMA Type 1 enclosed switches prevents accidental operation of the toggle operator and also allows the toggle operator to be padlocked in either the "ON" or "OFF" position. This handle guard is available in kit form for field installation on NEMA Type 1 surface and flush mounting enclosures. Standard NEMA Type 4 metallic enclosures include provisions for padlocking the device in the OFF position.

Switches①, Class MMS, MRS

Selection

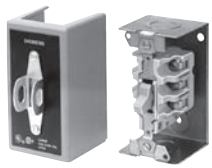

Class MMS Switch in a NEMA Type 1 Enclosure

Ordering Information

- Heater Elements not Required.
- Field Modification Kits see page 9/102.
- Dimensions see page 9/137.
- Wiring Diagrams see page 9/172.

Horsepower Ratings

Device	No of Poles	Motor Type AC	Maximum HP 115V	Maximum HP 230V	Maximum HP 450–575V	DC Ratings 90V	DC Ratings 115V	DC Ratings 230V
Class MMS	2	Single Phase	2	2	3	1	2	1 1/2
	3	3-Phase	2	7 1/2	10	1	2	1 1/2
Class MRS Reversing	2	Single Phase	2	2	3	1	2	1 1/2
	3	3-Phase	2	7 1/2	10	1	2	1 1/2
Class MMS Two Speed	2	Single Phase	2	2	3	1	2	1 1/2
	3	3-Phase, Constant or Variable Torque	2	7 1/2	10	1	2	1 1/2
	3	3-Phase, Constant Horsepower	2	7 1/2	10	1	2	1 1/2

Switch—Class MMS, Single Phase and 3-Phase

Type of Operator	No of Poles	Switch Features④	Open Type		General Purpose Flush Mounting Open Switch with Flush Plate (No Enclosure Provided)						NEMA Type 1 General Purpose Enclosure Surface Mounting				NEMA Type 3R, 4 & 12 Watertight, Dust-tight Metallic Enclosurer with Clear Cover		NEMA Type 4② Watertight, Dust-tight Metallic Enclosure		NEMA Type 7 & 9② Class I Groups B, C & D & Class II Groups E, F, G Enclosures	
					Gray Flush Plate		Standard Stainless Steel Flush Plate		Jumbo Stainless Steel Flush Plate		Standard		Oversized							
			Catalog Number	List Price$	Catalog Number	List Price$	Catalog Number	List Price$	Catalog Number	List Price$	Catalog Number	List Price$	Catalog Number	List Price$	Catalog Number	List Price$	Catalog Number	List Price$	Catalog Number	List Price$
Toggle	2	Standard	MMSK01		MMSKF1		MMSKS1		—		MMSKG1		—		MMSKWN1		MMSKW1		MMSKR1	
		Red Pilot Light 115V AC	MMSK01A③		MMSKF1A		MMSKS1A		—		MMSKG1A		MMSKGJ1A				MMSKW1A		—	
		Red Pilot Light 230V AC	MMSK01B③		MMSKF1B		MMSKS1B		MMSKSJ1B		MMSKG1B		—				MMSKW1B		—	
	3	Standard	MMSK02		MMSKF2		MMSKS2		—		MMSKG2		MMSKGJ2		MMSKWN2		MMSKW2		MMSKR2	
		Red Pilot Light 208-240V AC	MMSK02B③		MMSKF2B		MMSKS2B		—		MMSKG2B		MMSKGJ2B				MMSKW2B		—	
		Red Pilot Light 440-600V AC	MMSK02C③		—		MMSKS2C		MMSKSJ2C		MMSKG2C		MMSKGJ2C				MMSKW2C		—	
Key	2	Standard	MMSK03		MMSKF3		MMSKS3		—		MMSKG3		MMSKGJ3		MMSKWN3		—		—	
		Red Pilot Light 115V AC	—		MMSKF3A		MMSKS3A		MMSKSJ3A		MMSKG3A		MMSKGJ3A				—		—	
		Red Pilot Light 230V AC	MMSK03B		MMSKF3B		MMSKS3B		MMSKSJ3B		MMSKG3B		MMSKGJ3B				—		—	
	3	Standard	MMSK04		MMSKF4		MMSKS4		—		MMSKG4		MMSKGJ4		MMSKWN4		—		—	
		Red Pilot Light 208–240V AC	MMSK04B		MMSKF4B		MMSKS4B		MMSKSJ4B		MMSKG4B		MMSKGJ4B				—		—	
		Red Pilot Light 440–600V AC	MMSK04C		MMSKF4C		MMSKS4C		MMSKSJ4C		MMSKG4C		MMSKGJ4C				—		—	

Reversing Switch—Class MRS, Single Phase and 3-Phase

Type of Operator	Number of Poles	Suitable Motor Types	Switch Features④ (Including Mechanical Interlock)	General Purpose Flush Mounting Open Switch with Flush Plate (No Enclosure Provided)		NEMA Type 1 General Purpose Enclosure Surface Mounting		Replacement Switch Class MRS	
				Catalog Number	List Price $	Catalog Number	List Price $	Catalog Number	List Price $
Toggle	2	Single Phase 3-Lead Repulsion-Induction	Standard	MRSKF11		—		MRSK01T	
			Red Pilot Device—115V AC	MRSKF11A		—		MRSK01AT	
			Red Pilot Device— 230V AC	MRSKF11B		MRSKG11B		MRSK01BT	
	3	3-Phase; Also Single Phase Capacitor, Split Phase, or 4-Lead Repulsion-Induction	Standard	MRSKF22		MRSKG22		—	
			Red Pilot Light—110–120V AC	MRSKF22A		MRSKG22A		MRSK02AT	
			Red Pilot Light—208–220V AC	MRSKF22B		—		MRSK02BT	
			Red Pilot Light—440–600V AC	MRSKF22C		MRSKG22C		MRSK02CT	

Two Speed Switch—Class MMS, Single Phase and 3-Phase

Type of Operator	Number of Poles	Suitable Motor Types	Switch Features④ (Including Mechanical Interlock)	General Purpose Flush Mounting Open Switch with Flush Plate (No Enclosure Provided)		NEMA Type 1 General Purpose Enclosure Surface Mounting		Replacement Switch Class MRS	
				Catalog Number	List Price $	Catalog Number	List Price $	Catalog Number	List Price $
Toggle	2	Single Phase Two Winding (3-Lead)	Standard	MMSKF11		MMSKG11		MRSK01T	
			(2) Red Pilot Devices—115V AC	MMSKF11A		MMSKG11A		MRSK01AT	
			(2) Red Pilot Devices—230V AC	MMSKF11B		MMSKG11B		MRSK01BT	
	3	3-Phase Separate Winding (Wye-Connected)	Standard	MMSKF22		MMSKG22		MRSK02T	
			(2) Red Pilot Lights—208–240V AC	MMSKF22B		MMSKG22B		MRSK02BT	
			(2) Red Pilot Lights—440–600V AC	MMSKF22C		MMSKG22C		MRSK02CT	

① Manual switches do not include overloads.
② Furnished with (1) 3/4" NPT outlet in bottom (reversible for top feed). In order to obtain a 3/4" NPT outlet in top and bottom, add suffix letter "H" to type number with List Price adder.
③ Do not use as replacement interiors for NEMA Type 4 metallic enclosures. For replacement unit, order Type MMSK01 or MMSK02 and separate pilot light kit.
④ For switches that contain a pilot light, a Red light is standard. For a Green pilot light add "G" to the end of the catalog number.

Now Available with the New 3RV2 Innovations MSP

Class 11 - 3RV

Class 11 across the line manual starters and switches provide control for machinery where remote start stop control is not required.

Class 11 - 3RV manual starters are used for single and poly-phase motors up to 20HP @ 575V. Starters have bimetallic heater elements to provide class 10 overcurrent protection. Each starter has a fourth bimetallic strip that reacts only to the ambient temperature inside the control panel. This ambient compensation helps prevent the starter from nuisance tripping when the panel temperature is higher than the ambient temperature of the motor.

A built-in differential trip bar causes the starter to trip faster on a phase loss condition to help reduce motor damage.

Magnetic trip elements in each starter take the device off line when it senses current of 13 times the maximum FLA dial setting.

Class 11 - 3RV switches provide control for inherently protected motors. Typical applications include metal and woodworking machinery, grinders, power saws, conveyors, fans, pumps, blowers, textile and packaging machinery, and paper cutters.

Each switch is provided with magnetic trip elements which take the device off line when it senses current of 13 times the maximum switch rating.

Class 11 - 3RV manual starters can be used as Type E self-protected manual combination starters (up to 22 amps) per UL508 or as components in Group Installation per NEC 430.53. When using the Class 11 - 3RV as a manual combination starter upstream protection is not required.

Class 11 - 3RV controllers are available with low voltage protection which will automatically open the power poles when the voltage drops or the power is interrupted.

Controllers with the LVP option provide the OSHA requirements for protecting personnel from potential injury caused by the automatic start-up of machinery following a voltage drop or power interruption when low voltage protection is specified.

Class 11 - 3RV is available as Open style, or in NEMA 1, NEMA 7 & 9 or NEMA 7 & 9 / 3 & 4 enclosures.

Standard Features include:

- ON/OFF rotary handle with lockout and visible trip indication
- Adjustment dial for setting to motor FLA (Starters only)
- Low Voltage Protection (LVP) Option
- Short Circuit trip at 13 times the maximum setting of the FLA dial or rated current
- Ambient compensated up to 140°F
- Phase loss sensitivity
- Test trip function
- LVP Option Meets OSHA Requirements
- UL Listed
- CSA Certified

OPEN TYPE
Starter

NEMA 1
General Purpose

NEMA 7 & 9
Div 1 & Div 2
Class I Group C & D
Class II Group E, F & G

NEMA 3 & 4, NEMA 7 & 9
Div 1 & Div 2
Class I Group C & D
Class II Group E, F & G

Starters and Switches, Class 11 - 3RV

Selection

Class 11 Manual Motor Starter

Ordering Information

- No heaters required.
- Field Modification Kits see page 9/102.
- Dimensions see page 9/139.
- Wiring Diagrams see page 9/172.
- For applications requiring a low voltage protection coil see table at right.

Low Voltage Protection Coil Table

60 Hz Voltage	Letter
120V	*F
208V	*D
240V	*G
460V	*H

*Add corresponding letter to end of base Class 11 catalog number for low voltage protection coil with List Price adder.

Note: The LVP option for Open type 3RV is available from the factory, please order separately from the field modification kits on page 9/103.

The coil voltage should correspond with the line voltage.

Manual Starter—Class 11 - 3RV

FLA Adjustment Range①	Max HP						Enclosure							
	Single Phase HP Ratings		3-Phase HP Ratings				Open Type		NEMA 1 General Purpose		NEMA 7 & 9 Class I Groups C & D Class II Groups E, F & G		NEMA 3 & 4, NEMA 7 & 9 Watertight Class I Groups C & D Class II Groups E, F & G	
	115V	230V	200V	230V	460V	575V	Catalog No.	List Price $	Catalog No.	List Price $	Catalog No.	List Price $	Catalog No.	List Price $
0.11-0.16	—	—	—	—	—	—	3RV2011-0AA10②		11AD3B		11AD3H		11AD3W	
0.14-0.2	—	—	—	—	—	—	3RV2011-0BA10②		11BD3B		11BD3H		11BD3W	
0.18-0.25	—	—	—	—	—	—	3RV2011-0CA10②		11CD3B		11CD3H		11CD3W	
0.22-0.32	—	—	—	—	—	—	3RV2011-0DA10②		11DD3B		11DD3H		11DD3W	
0.28-0.4	—	—	—	—	—	—	3RV2011-0EA10②		11ED3B		11ED3H		11ED3W	
0.35-0.5	—	—	—	—	—	—	3RV2011-0FA10②		11FD3B		11FD3H		11FD3W	
0.45-0.63	—	—	—	—	—	—	3RV2021-0GA10②		11GD3B		11GD3H		11GD3W	
0.55-0.8	—	—	—	—	—	½	3RV2021-0HA10②		11HD3B		11HD3H		11HD3W	
0.7-1	—	—	—	—	½	½	3RV2021-0JA10②		11JD3B		11JD3H		11JD3W	
0.9-1.25	—	—	—	—	¾	¾	3RV2021-0KA10②		11KD3B		11KD3H		11KD3W	
1.1-1.6	—	1/10	—	—	¾	1	3RV2021-1AA10②		11LD3B		11LD3H		11LD3W	
1.4-2	—	⅛	—	—	1	1 ½	3RV2021-1BA10②		11MD3B		11MD3H		11MD3W	
1.8-2.5	—	⅛	½	½	1 ½	1 ½	3RV2021-1CA10②		11ND3B		11ND3H		11ND3W	
2.2-3.2	1/10	¼	¾	¾	1 ½	2	3RV2021-1DA10②		11PD3B		11PD3H		11PD3W	
2.8-4	⅛	⅓	¾	1	2	3	3RV2021-1EA10②		11QD3B		11QD3H		11QD3W	
3.5-5	⅛	½	1	1	3	3	3RV2021-1FA10②		11RD3B		11RD3H		11RD3W	
4.5-6.3	¼	¾	1 ½	1 ½	5	5	3RV2021-1GA10②		11SD3B		11SD3H		11SD3W	
5.5-8	⅓	1	2	2	5	5	3RV2021-1HA10②		11TD3B		11TD3H		11TD3W	
7-10	½	1 ½	3	3	7 ½	10	3RV2021-1JA10②		11UD3B		11UD3H		11UD3W	
9-12.5	½	2	3	3	7 ½	10	3RV2021-1KA10②		11VD3B		11VD3H		11VD3W	
11-16	1	3	5	5	10	15③	3RV2021-4AA10②		11WD3B		11WD3H		11WD3W	
14-20	1 ½	3	5	7 ½	15	20③	3RV2021-4BA10②		11XD3B		11XD3H		11XD3W	
17-22	2	3	7 ½	7 ½	15	20③	3RV2021-4CA10②		11YD3B		11YD3H		11YD3W	
20-25	2③	5③	7 ½③	7 ½③	15③	20③	3RV2021-4DA10②		11ZD3B		11ZD3H		11ZD3W	

Manual Switch—Class 11 - 3RV

Rated Current①	Max HP						Enclosure							
	Single Phase HP Ratings		3-Phase HP Ratings				Open Type		NEMA 1 General Purpose		NEMA 7 & 9 Class I Groups C & D Class II Groups E, F & G		NEMA 3 & 4, NEMA 7 & 9 Watertight Class I Groups C & D Class II Groups E, F & G	
	115V	230V	200V	230V	460V	575V	Catalog No.	List Price $	Catalog No.	List Price $	Catalog No.	List Price $	Catalog No.	List Price $
1	—	—	—	—	½③	½③	3RV2321-0JC10②		111D3B		111D3H		111D3W	
5	⅙③	½③	1③	1③	3③	3③	3RV2321-1FC10②		112D3B		112D3H		112D3W	
10	½③	1 ½③	3③	3③	7 ½③	10③	3RV2321-1JC10②		113D3B		113D3H		113D3W	
20	1 ½③	3③	5③	7 ½③	15③	20③	3RV2321-4BC10②		114D3B		114D3H		114D3W	
25	2③	5③	7 ½③	7 ½ ③	15③	20③	3RV2321-4DC10②		115D3B		115D3H		115D3W	

① Instantaneous Magnetic Trip will occur at 13 times the maximum FLA dial setting or rated switch current.
② Product Category: IEC
③ Shaded Ratings apply for Manual Motor Controllers Only! These Ratings do not apply as UL Listed Manual Combination Starters.
④ Add 1 to the end of the catalog number for 1/2 inch drain hole with plug and list price adder. Drain fitting not supplied, order separately XDB-2.

Catalog Numbering System

General

Class

- **17** — Combination Starter (Non Fusible, Fusible)
- **18** — Combination Starter (Circuit Breaker)
- **25** — Reversing Combination Starter (Non Fusible, Fusible)
- **26** — Reversing Combination Starter (Circuit Breaker)

Size

- **B** — 00
- **C** — 0
- **D** — 1
- **E** — 1¾
- **F** — 2
- **G** — 2½
- **H** — 3
- **I** — 3½
- **J** — 4
- **L** — 5
- **M** — 6
- **N** — 7
- **P** — 8

Model

- **U** — Solid-state OLR size 0–4 & size 7 & 8
- **P** — Thermal size 0–3½, Solid state size 5 & 6

Solid-state OLR Current Range⑤

Three Phase

- **A** — 0.25–1
- **B** — 0.75–3.4
- **C** — 3–12
- **D** — 5.5–22
- **E** — 10–40
- **F** — 13–52
- **G** — 25–100
- **H** — 50–200
- **J** — 100–300 w/ CT's
- **K** — 133–400 w/ CT's
- **L** — 200–600 w/ CT's
- **M** — 250–750 w/ CT's
- **N** — 400–1200 w/ CT's

Breaker HP Code②
Horsepower Rating
200, 230, 460, 575

- **A** — ½, ½,1, 1
- **B** — 1, 1, 3, 3
- **C** — 3, 3, 5, 5
- **D** — 3, 3, 7½, 7½
- **E** — 7½, 7½, 10, 10
- **F** — —, —, 15, 15
- **G** — 10, 10, —, —
- **H** — 7½, 10, 20, 20
- **J⑥** — 10, 15, 25, 25
- **K** — —, —, 30, 30
- **L** — 15, 20, —, —
- **M** — —, —, 30, 30
- **N** — 25, 30, 50, 50
- **P** — 30, 40, 75, 75
- **R** — 40, 50, 100, 100

Enclosure Size

- **92** — Standard Width
- **82** — Extra Wide

Enclosure Type

- **B** — NEMA 1
- **F** — NEMA 4X Fiberglass
- **H** — NEMA 7/9/3/4, Bolted (Class 18 & 26 only)
- **N** — NEMA 12 (Field convertible to 3/3R/4)
- **W** — NEMA 4/4X 304 Stainless Steel

Class

- **14** — Across the Line NEMA Motor Starter
- **22** — Reversing NEMA Motor Starter
- **40** — Across the Line NEMA Magnetic Contactor
- **43** — Reversing NEMA Magnetic Contactor

Size

- **B** — 00
- **C** — 0
- **D** — 1
- **E** — 1¾
- **F** — 2
- **G** — 2½
- **H** — 3
- **I** — 3½
- **J** — 4
- **L** — 5
- **M** — 6
- **N** — 7
- **P** — 8

Model

- **U** — Solid-state OLR size 00–4, Size 7 & 8
- **P** — Thermal size 00–4, Solid state sizes 5 & 6

Solid-state OLR Current Range⑤

Three Phase

- **A** — 0.25–1
- **B** — 0.75–3.4
- **C** — 3–12
- **D** — 5.5–22
- **E** — 10–40
- **F** — 13–52
- **G** — 25–100
- **H** — 50–200
- **J** — 100–300 w/ CT's
- **K** — 133–400 w/ CT's
- **L** — 200–600 w/ CT's
- **M** — 250–750 w/ CT's
- **N** — 400–1200 w/ CT's

Single Phase①

- **A** — 0.25–1
- **B** — 0.75–3.4
- **C** — 3–12
- **D** — 5.5–22

Pilot Control Circuit

- **2** — suitable for 3-wire control (NO aux. contact incl.)

Enclosure Size

- **1** — 2 power poles,1-phase
- **3** — 3 power poles, 3-phase
- **8** — 3 power poles, 3-phase, extra wide enclosure

Coil

- **A③** — 110–120V/220–240V@60Hz 110V/190–220V@50Hz
- **C③** — 220–240V/440–480V@60Hz 190–220V/380–440V@50Hz
- **D** — 200–208V@60Hz
- **E** — 550–600V@60Hz 550V@50Hz
- **F** — 120V@60Hz 110V@50Hz
- **G** — 220–240V@60Hz 190–220V@50Hz
- **H** — 440–480V@60Hz 380–440V@50Hz
- **J⑥** — 24V@60Hz 24V@50Hz
- **L** — 277V@60Hz 240V@50Hz

Enclosure Type

- **A** — Open
- **B** — NEMA 1
- **F** — NEMA 4X Fiberglass
- **H** — NEMA 7/9/3/4, Bolted (Class 18 & 26 only)
- **0** — NEMA 12 (Field convertible to 3/3R/4)
- **W** — NEMA 4/4X 304 Stainless Steel

Class

- **36** — Non Combination Reduced Voltage Starter
- **37** — Combination Reduced Voltage Starter

Size

- **C** — 0
- **D** — 1
- **E** — 1¾
- **F** — 2
- **G** — 2½
- **H** — 3
- **I** — 3½
- **J** — 4
- **L** — 5
- **M** — 6
- **N** — 7
- **P** — 8

Model

- **U** — Solid-state OLR size 0–4 & size 7 & 8
- **P** — Thermal size 0–3½ Solid state size 5 & 6

Solid-state OLR Current Range⑤

Type

- **T** — Auto XFMR
- **P** — Part Wind.
- **0** — Wye Delta Open Trans.
- **C** — Wye Delta Closed Trans.

Line Volts

- **2** — 230
- **3** — 380
- **4** — 460
- **5** — 575
- **6** — 200/208

Enclosure Type

- **A** — Open
- **B** — NEMA 1
- **W** — NEMA 4/4X Stainless Steel
- **0** — NEMA 12

Coil

- **D**
- **E**
- **F**
- **G**
- **H**
- **L**

Disconnect Type④

- **D** — Non Fused Disc.
- **F** — Fusible Disc.
- **P** — MCP

① Single phase solid-state OLR available on Class 14 Starters only.
② Not used on Class 17, 25 or with solid-state OLR versions.
③ Not available on sizes 5–8.
④ For Class 37 only.
⑤ Position used for solid-state OLR only.
⑥ Not available on sizes 7 and 8.

Features and Benefit

General

Solid State Starter Class 14

Standard Features

Size 00–4 magnetic starters include the following standard features:

- Rugged Industrial Design
- Half Sizes for Cost and Space Savings
- Dual Voltage, Dual Frequency Coils
- Solid State or Ambient Compensated Bimetal Overload Protection
- Wide Range of Accessories
- Easy Coil Access
- Overload Test Feature
- Straight Thru Wiring
- Gravity Dropout
- Large Silver Cadmium Contacts
- UL listed file #E14900 (class 14, 22, 30, 40 & 43)
- CSA certified file #LR 6535 (class 14, 22, 30, 40 & 43)

Application

Heavy Duty starters are designed for across the line starting of single phase and polyphase motors.

These controls are available in NEMA Sizes 00 through 8. In addition to the usual NEMA Starter Sizes, Siemens offers three exclusive Half Sizes; 1¾, 2½ and 3½. These integral sizes offer the same rugged, industrial construction as our NEMA Sizes and ensure efficient operating performance. Half Sizes provide a real cost savings by cutting down on over capacity when NEMA Sizes exceed the motor ratings. All Siemens Heavy Duty controls, including our popular Half Sizes comply with applicable NEMA and UL tests.

All starters are supplied with a NO holding interlock that in conjunction with an appropriate pilot device will provide low voltage protection or release.

NEMA starters are ideal for applications requiring dependability and durability. Typical applications include use with machine tools, air conditioning equipment, material handling equipment, compressors, hoists and various production and industrial equipment as well as in demanding automotive applications.

Starters are available as an open type or in NEMA 1, 12/3/3R, 4 (painted), 4/4X (stainless), 4X (fiberglass), and 7 & 9 enclosures.

Gravity Dropout

For added reliability, the gravity dropout of the armature and contacts is assisted by stainless steel springs which help provide quick, precise opening of the contacts.

45 Degree, Wedge Action Contacts

The 45 degree, wedge action contacts reduce tracking and provide faster arc quenching. The resulting self-cleaning and reduced contact bounce mean cooler operation and longer life for the large silver cadmium oxide contacts.

Terminal Design

Control terminals are self-rising pressure type.

Molded Coil

Magnetic coils are carefully wound and then sealed in epoxy. Encapsulation helps seal out moisture, promotes heat transfer and resists electrical, mechanical and thermal stresses.

Dual Voltage/Frequency Coil

Starters are available with dual voltage, dual frequency coils. They are designed to operate on either 50 or 60 Hertz.

Molded Stationary Contact Block

Thermoset materials resist arc tracking and the stresses of heat and severe impact.

Field Modification Kits

All starters can be modified in the field with a complete range of accessories. These include pushbuttons, selector switches, pilot lights, auxiliary contacts and surge suppressors.

Auxiliary Equipment

- NEMA starters are available with built-in START-STOP push buttons for 3-wire control or a HAND-OFF-AUTO selector switch for 2-wire control
- Field modifications such as auxiliary contacts, pilot lights, push buttons, selector switches, and fuse blocks are available to meet particular application requirements
- Normally opened or normally closed auxiliary power pole kits are available for Sizes 00 through 1¾
- Transformers can be ordered as either factory or field modifications. In some cases these may require a larger enclosure
- A full line of replacement parts are available including contact kits, coils, and overload relays

Size 5 & 6 Starters Additional Features

- Solid State Overload (3RB type) Standard
- Latest technology in arc quenching to extend contactor life
- Wide variety of enclosures in all starter configurations

Size 7 & 8 Starters Additional Features

- New Compact Design
- Can be mounted in any position
- Same coil voltage is AC or DC

Features and Benefits

Selection

ESP200™ Solid State Starter

ESP200™ starters combine the rugged NEMA contactors with a state of the art solid state overload that provides phase loss, phase unbalance ground fault protection. It offers the user greater motor protection and extended life in heavy duty applications. The ESP200™ ultimately results in a cost savings to the user.

ESP200™ Solid State Overload Relays

Standard features provide Improved Starter Performance:

- True phase loss protection; trips within 3 seconds
- Phase unbalanced prevents motor running inefficiently
- Ground fault trip when selected
- Selectable trip class 5, 10, 20 or 30
- Reset trip can be selected Auto/ Manual restart
- Easy to select and use, Dip Switch selectable
- Overload is self powered, no need for external power source

Half Size Starters

Half-Size starters feature all the rugged performance characteristics of our NEMA rated starter sizes, but are fractionally sized to more closely match your exact motor rating. As a result, significant economic savings are made possible without sacrificing the reliability you expect from a heavy duty starter.

These additional starter sizes have the reserve capacity to handle occasional plugging and jogging applications without derating. Superior operating performance in heavy duty applications is assured by the large current carrying parts, not by derating the device.

Exclusive "half-sizes" save potentially hundreds, even thousands of dollars per project.

Using the table below, simply match the specific size starter to the horsepower rating of your motor. Every half-size starter saves you money—up to 31%.

All "half-sizes" comply to applicable NEMA and UL standards.

ESP200® FLA Adjustment Dial—Set the adjustment dial on the overload to the FLA of the motor.

Figure 1

Typical Solid-State Overload Adjustment Dial Markings

Each overload is precisely calibrated and labels are laser printed.

DIP Switch Settings

Adjust DIP switch settings to the Trip Class desired 5, 10, 20, or 30.

- Set Phase Unbalance ON or OFF
- Set Phase Loss ON or OFF
- Set Reset to Manual or Automatic
- Set Ground Fault ON or OFF

Savings for Siemens "Half-Size" Starters in NEMA 1 Enclosures, FVNR

Motor Size		Starter Size	Half Size	List Price $	"Half-Size" Savings Over Next Full Size
230V	460V				
7½	10	1	—		—
10	15	—	1¾		31%
15	25	2	—		—
20	30	—	2½		20%
30	50	3	—		—
40	75	—	3½		13%
50	100	4	—		—

Standard Auxiliary Contacts			
Type	Size (3rd Character)	Configuration	Internal / External
All FVNR Starters & Contactors	B Thru E	1N.O.	Internal
	F Thru J	1N.O.	External
	L Thru M	2N.O., 2N.C.	External
	N Thru P	1N.O., 1N.C.	External

Solid State Overload with Auto/Manual Reset, Class 14

Selection

Ordering Information

- Replace the (*) with a letter from the coil table. Dual voltage coils are wired on high voltage unless specified on order.
- Field Modification Kits see page 9/104.
- Factory Modifications see page 9/119.
- Dimensions see pages 9/140 open and 9/157 enclosed.
- Wiring Diagrams see page 9/173.
- Replacement Parts see page 9/131.

Coil Table

60Hz Voltage	Letter
24	J
120	F
110–120/220–240①	A
200–208	D
220–240	G
277	L
220–240/440–480①	C
440–480	H
575–600	E

For other voltages and frequencies, see Factory Modifications page 9/119.

Open Type & Standard Width Enclosure, 3-Phase, 3-Pole

Max Hp						Overload		Enclosure											
								Open Type Standard Auxiliary Contacts⑦		**NEMA 1** General Purpose		**NEMA 4/4X Stainless** Watertight, Dust-tight, Corrosion Resistant @ = W for 304 Stainless Steel @ = X for 316 Stainless Steel		**NEMA 4X Fiberglass** Watertight, Dust-tight Corrosion Resistant		**NEMA 7 & 9 NEMA 3 & 4** Div. 1 and Div. 2 Class I Groups C & D Class II Groups E, F & G Class III Bolted Enclosures Indoor/Outdoor Use		**NEMA 12 NEMA 3/3R** Industrial Use Weatherproof	
200 Volts	**230 Volts**	**460 Volts**	**575 Volts**	**NEMA Size**	**Half Size**	**Amp Range**	**Frame Size**	**Catalog Number**	**List Price $**	**Catalog Number**	**List Price $**	**Catalog Number**	**List Price $**	**Catalog Number**	**List Price $**	**Catalog Number**	**List Price $**	**Catalog Number**	**List Price $**
⅛	⅛	½	½	00	—	0.25–1	A	**14BUA32A***		**14BUA32B***		**Use Size 0**	—	**Use Size 0**	—	**Use Size 0**	—	**Use Size 0**	—
½	¾	1½	2	00	—	0.75–3.4	A	**14BUB32A***		**14BUB32B***		**Use Size 0**	—	**Use Size 0**	—	**Use Size 0**	—	**Use Size 0**	—
1½	1½	2	—	00	—	3–12	A1	**14BUC32A***		**14BUC32B***		**Use Size 0**	—	**Use Size 0**	—	**Use Size 0**	—	**Use Size 0**	—
⅛	⅛	½	½	0	—	0.25–1	A	**14CUA32A***		**14CUA32B***		**14CUA32@***		**14CUA32F***		**14CUA32H***		**14CUA320***	
½	¾	1½	2	0	—	0.75–3.4	A	**14CUB32A***		**14CUB32B***		**14CUB32@***		**14CUB32F***		**14CUB32H***		**14CUB320***	
2	2	5	5	0	—	3–12	A1	**14CUC32A***		**14CUC32B***		**14CUC32@***		**14CUC32F***		**14CUC32H***		**14CUC320***	
3	3	—	—	0	—	5.5–22	A1	**14CUD32A***		**14CUD32B***		**14CUD32@***		**14CUD32F***		**14CUD32H***		**14CUD320***	
⅛	⅛	½	½	1	—	0.25–1	A	**14DUA32A***		**14DUA32B***		**14DUA32@***		**14DUA32F***		**14DUA32H***		**14DUA320***	
½	¾	1½	2	1	—	0.75–3.4	A	**14DUB32A***		**14DUB32B***		**14DUB32@***		**14DUB32F***		**14DUB32H***		**14DUB320***	
2	2	5	5	1	—	3–12	A1	**14DUC32A***		**14DUC32B***		**14DUC32@***		**14DUC32F***		**14DUC32H***		**14DUC320***	
3	3	10	10	1	—	5.5–22	A1	**14DUD32A***		**14DUD32B***		**14DUD32@***		**14DUD32F***		**14DUD32H***		**14DUD320***	
7½	7½	—	—	1	—	10–40	A1	**14DUE32A***		**14DUE32B***		**14DUE32@***		**14DUE32F***		**14DUE32H***		**14DUE320***	
10	10	15	15	—	1¾	10–40	A1	**14EUE32A***		**14EUE32B***		**14EUE32@***		**14EUE32F***		**14EUE32H***		**14EUE320***	
10	15	25	25	2	—	13–52	B	**14FUF32A***		**14FUF32B***		**14FUF32@***		**14FUF32F***		**14FUF32H***		**14FUF320***	
15	20	30	30	—	2½	25–100	B	**14GUG32A***		**14GUG32B***		**14GUG32@***		**14GUG32F***		**14GUG32H***		**14GUG320***	
25	30	50	50	3	—	25–100	B	**14HUG32A***		**14HUG32B***		**14HUG32@***		**14HUG32F***		**14HUG32H***		**14HUG320***	
30	40	75	75	—	3½	50–200	B	**14IUH32A***		**14IUH32B***		**14IUH32@***		**14IUH32F***		**14IUH32H***		**14IUH320***	
40	50	100	100	4	—	50–200	B	**14JUH32A***		**14JUH32B***		**14JUH32@***		**14JUH32F***		**14JUH32H***		**14JUH320***	
75	100	200	200	5	—	55–250	—	**14LPU32A***		**14LPU32B***		**14LPU32E*③**		—	—	**14LPU32H***		**14LPU320***	
150	200	400	400	6	—	160–630	—	**14MPX32A***		**14MPX32B***		**14MPX32E*③**		—	—	—	—	**14MPX320***	
—	300	600	600	7*④	—	400–1220	A1+CT	**14NUN32A***		**14NUN32B***		**14NUN32E*③**		—	—	—	—	**14NUN320***	
—	450	900	900	8⑤	—	400–1220	A1+CT	**14PUN32A***		**14PUN32B***		**14PUN32E*③**		—	—	—	—	**14PUN320***	

Open Type & Standard Width Enclosure, Single Phase, 2-Pole②⑥

Max Hp			Overload		Enclosure											
					Open Type Standard Auxiliary Contacts		**NEMA 1** General Purpose		**NEMA 4/4X Stainless** Watertight, Dust-tight, Corrosion Resistant @ = W for 304 Stainless Steel @ = X for 316 Stainless Steel		**NEMA 4X Fiberglass** Watertight, Dust-tight Corrosion Resistant		**NEMA 7 & 9 NEMA 3 & 4** Div. 1 and Div. 2 Class I Groups C & D Class II Groups E, F & G Class III Bolted Enclosures Indoor/Outdoor Use		**NEMA 12 NEMA 3/3R** Industrial Use Weatherproof	
115 Volts	**208/230 Volts**	**NEMA Size**	**Amp Range**	**Frame Size**	**Catalog Number**	**List Price $**	**Catalog Number**	**List Price $**	**Catalog Number**	**List Price $**	**Catalog Number**	**List Price $**	**Catalog Number**	**List Price $**	**Catalog Number**	**List Price $**
⅛	¼	0	0.75–3.4	A	**14CUB12A***		**14CUB12B***		**14CUB12@***		**14CUB12F***		**14CUB12H***		**14CUB120***	
¼	½	0	3–12	A1	**14CUC12A***		**14CUC12B***		**14CUC12@***		**14CUC12F***		**14CUC12H***		**14CUC120***	
1	2	0	5.5–22	A1	**14CUD12A***		**14CUD12B***		**14CUD12@***		**14CUD12F***		**14CUD12H***		**14CUD120***	
⅛	¼	1	0.75–3.4	A	**14DUB12A***		**14DUB12B***		**14DUB12@***		**14DUB12F***		**14DUB12H***		**14DUB120***	
¼	½	1	3–12	A1	**14DUC12A***		**14DUC12B***		**14DUC12@***		**14DUC12F***		**14DUC12H***		**14DUC120***	
1	2	1	5.5–22	A1	**14DUD12A***		**14DUD12B***		**14DUD12@***		**14DUD12F***		**14DUD12H***		**14DUD120***	
3	7½	2	25-100	B	**14FUG12A***		**14FUG12B***		**14FUG12@***		**14FUG12F***		**14FUG12H***		**14FUG120***	
7½	15	3	25-100	B	**14HUG12A***		**14HUG12B***		**14HUG12@***		**14HUG12F***		**14HUG12H***		**14HUG120***	

Note: All starter sizes carry one maximum Hp rating (per the National Electric Code).

① Dual voltage coils not available in size 5–8 starters.

② Coils D, F, or G will be wired for incoming voltage. J coil will be wired for separate source. Coils E, H, and L do not apply to single phase starters.

③ Enclosure is NEMA Type 4 (painted steel).

④ F coil 100-250V AC 50/60Hz, or DC, H coil 150-500V AC 50/60Hz, or DC

⑤ Only available F coil100-250V AC 50/60Hz, or DC

⑥ To receive a single phase starter in an extra wide enclosure order an enclosure kit from pg 9/113 and the open style starter from pg 9/13 or 9/15 as separate items.

Solid State Overload with Auto/Manual Reset, Class 14

Selection

NEMA 1

Ordering Information

- Replace the (*) with a letter from the coil table. Dual voltage coils are wired on high voltage unless specified on order.
- Field Modification Kits see page 9/104.
- Factory Modifications see page 9/119.
- Dimensions see page 9/157.
- Wiring Diagrams see page 9/173.
- Replacement Parts see page 9/131.

Coil Table

60Hz Voltage	Letter
24	J
120	F
110–120/220–240	A
200–208	D
220–240	G
277	L
220–240/440–480	C
440–480	H
575–600	E

For other voltages and frequencies, see Factory Modifications page 9/119.

Extra Wide Enclosure, 3-Phase, 3-Pole

Max Hp						Overload		Enclosure							
								NEMA 1 General Purpose		**NEMA 4/4X Stainless** Watertight, Dust-tight, Corrosion Resistant @ = W for 304 Stainless Steel @ = X for 316 Stainless Steel		**NEMA 7 & 9** **NEMA 3 & 4** Div. 1 and Div. 2 Class I Groups C & D Class II Groups E, F & G Class III Bolted Enclosures Indoor/Outdoor Use		**NEMA 12** **NEMA 3/3R** Industrial Use Weatherproof	
200 Volts	**230 Volts**	**460 Volts**	**575 Volts**	**NEMA Size**	**Half Size**	**Amp Range**	**Frame Size**	**Catalog Number**	**List Price $**	**Catalog Number**	**List Price $**	**Catalog Number**	**List Price $**	**Catalog Number**	**List Price $**
⅛	⅛	½	½	00	—	0.25–1	A	**14BUA82B***		**Use Size 0**	—	**Use Size 0**	—	**Use Size 0**	—
½	¾	1½	2	00	—	0.75–3.4	A	**14BUB82B***		**Use Size 0**	—	**Use Size 0**	—	**Use Size 0**	—
1½	1½	2	—	00	—	3–12	A1	**14BUC82B***		**Use Size 0**	—	**Use Size 0**	—	**Use Size 0**	—
⅛	⅛	½	½	0	—	0.25–1	A	**14CUA82B***		**14CUA82@***		**14CUA82H***		**14CUA820***	
½	¾	1½	2	0	—	0.75–3.4	A	**14CUB82B***		**14CUB82@***		**14CUB82H***		**14CUB820***	
2	2	5	5	0	—	3–12	A1	**14CUC82B***		**14CUC82@***		**14CUC82H***		**14CUC820***	
3	3	—	—	0	—	5.5–22	A1	**14CUD82B***		**14CUD82@***		**14CUD82H***		**14CUD820***	
⅛	⅛	½	½	1	—	0.25–1	A	**14DUA82B***		**14DUA82@***		**14DUA82H***		**14DUA820***	
½	¾	1½	2	1	—	0.75–3.4	A	**14DUB82B***		**14DUB82@***		**14DUB82H***		**14DUB820***	
2	2	5	5	1	—	3–12	A1	**14DUC82B***		**14DUC82@***		**14DUC82H***		**14DUC820***	
3	3	10	10	1	—	5.5–22	A1	**14DUD82B***		**14DUD82@***		**14DUD82H***		**14DUD820***	
7½	7½	—	—	1	—	10–40	A1	**14DUE82B***		**14DUE82@***		**14DUE82H***		**14DUE820***	
10	10	15	15	—	1¾	10–40	A1	**14EUE82B***		**14EUE82@***		**14EUE82H***		**14EUE820***	
10	15	25	25	2	—	13–52	B	**14FUF82B***		**14FUF82@***		**14FUF82H***		**14FUF820***	
15	20	30	30	—	2½	25–100	B	**14GUG82B***		**14GUG82@***		**14GUG82H***		**14GUG820***	
25	30	50	50	3	—	25–100	B	**14HUG82B***		**14HUG82@***		**14HUG82H***		**14HUG820***	
30	40	75	75	—	3½	50–200	B	**14IUH82B***		**14IUH82@***		**14IUH82H***		**14IUH820***	

Note: All starter sizes carry one maximum Hp rating (per the National Electric Code).

Ambient Compensated Bimetal Overload with Manual and Auto Reset, Class 14

Selection

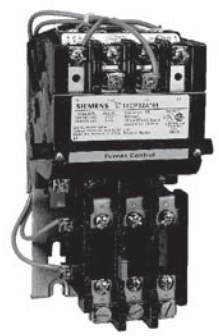

Ordering Information

- Replace the (*) with a letter from the coil table. Dual voltage coils are wired on high voltage unless specified on order.
- Heater elements see page 9/124. Single phase starters require 1 heater element. 3-phase starters require 3 heater elements.
- Field Modification Kits page 9/104.
- Factory Modifications page 9/119.
- Dimensions see page 9/140 open and 9/157 enclosed.
- Wiring Diagrams see page 9/173.
- Replacement Parts see page 9/131.
- For NO/NC SPDT contact on overload relay, replace "81" with "91". "81" indicates one NC contact.

Coil Table

60Hz Voltage	Letter
24	J
120	F
110–120/220–240	A
200–208	D
220–240	G
277	L
220–240/440–480	C
440–480	H
575–600	E

For other voltages and frequencies, see Factory Modifications page 9/119.

Open Type & Standard Width Enclosure, 3-Phase, 3-Pole

Max Hp							Enclosure											
200 Volts	230 Volts	460 Volts	575 Volts	Cont-actor Amp Rating	NEMA Size	Half Size	Open Type Standard Auxiliary Contacts③		NEMA 1 General Purpose		NEMA 4/4X Stainless Watertight, Dust-tight Corrosion Resistant @ = W for 304 Stainless @ = X for 316 Stainless Steel		NEMA 4X Fiberglass Watertight, Dust-tight Corrosion Resistant		NEMA 7 & 9 NEMA 3 & 4 Class I Groups C & D Class II Groups E, F & G Class III Bolted Enclosures Indoor/Outdoor Use		NEMA 12 NEMA 3/3R Industrial Use Weatherproof	
							Catalog No	$	Catalog No	$	Catalog No	$	Catalog No	$	Catalog No	$	Catalog No	$
1½	1½	2	2	9	00	—	14BP32A*81		14BP32B*81		Use Size 0	—	Use Size 0	—	Use Size 0	—	Use Size 0	—
3	3	5	5	18	0	—	14CP32A*81		14CP32B*81		14CP32@*81		14CP32F*81		14CP32H*81		14CP320*81	
7½	7½	10	10	27	1	—	14DP32A*81		14DP32B*81		14DP32@*81		14DP32F*81		14DP32H*81		14DP320*81	
10	10	15	15	40	—	1¾	14EP32A*81		14EP32B*81		14EP32@*81		14EP32F*81		14EP32H*81		14EP320*81	
10	15	25	25	45	2	—	14FP32A*81		14FP32B*81		14FP32@*81		14FP32F*81		14FP32H*81		14FP320*81	
15	20	30	30	60	—	2½	14GP32A*81		14GP32B*81		14GP32@*81		14GP32F*81		14GP32H*81		14GP320*81	
25	30	50	50	90	3	—	14HP32A*81		14HP32B*81		14HP32@*81		14HP32F*81		14HP32H*81		14HP320*81	
30	40	75	75	115	—	3½	14IP32A*81		14IP32B*81		14IP32@*81		14IP32F*81		14IP32H*81		14IP320*81	
40	50	100	100	135	4	—	14JG32A*81		14JG32B*81		14JG32@*81		14JG32F*81		14JG32H*81		14JG320*81	

Open Type & Standard Width Enclosure, Single Phase, 2-Pole①②

Max Hp					Enclosure											
115 Volts	208/ 230 Volts	Contactor Amp Rating	NEMA Size	Half Size	Open Type		NEMA 1 General Purpose		NEMA 4/4X Stainless Watertight, Dust-tight Corrosion Resistant @ = W for 304 Stainless Steel @ = X for 316 Stainless Steel		NEMA 4X Fiberglass Watertight, Dust-tight Corrosion Resistant Class II Groups E, F & G Class III		NEMA 7 & 9 NEMA 3 & 4 Div 1 and Div 2 Class I Groups C & D Bolted Enclosures		NEMA 12 NEMA 3/3R Industrial Use Weatherproof	
					Catalog No	$	Catalog No	$	Catalog No	$	Catalog No	$	Catalog No	$	Catalog No	$
⅓	1	9	00	—	14BP12A*81		14BP12B*81		Use Size 0	—	Use Size 0	—	Use Size 0	—	Use Size 0	—
1	2	18	0	—	14CP12A*81		14CP12B*81		14CP12@*81		14CP12F*81		14CP12H*81		14CP120*81	
2	3	27	1	—	14DP12A*81		14DP12B*81		14DP12@*81		14DP12F*81		14DP12H*81		14DP120*81	
3	5	35	1P	—	14EP12A*81		14EP12B*81		14EP12@*81		14EP12F*81		14EP12H*81		14EP120*81	
3	7½	45	2	—	14FP12A*81		14FP12B*81		14FP12@*81		14FP12F*81		14FP12H*81		14FP120*81	
5	10	60	—	2½	14GP12A*81		14GP12B*81		14GP12@*81		14GP12F*81		14GP12H*81		14GP120*81	

Extra Wide Enclosure, 3-Phase, 3-Pole

Max Hp							Enclosure							
200 Volts	230 Volts	460 Volts	575 Volts	Cont-actor Amp Rating	NEMA Size	Half Size	NEMA 1 General Purpose		NEMA 4/4X Stainless Watertight, Dust-tight Corrosion Resistant @ = W for 304 Stainless Steel @ = X for 316 Stainless Steel		NEMA 7 & 9. NEMA 3 & 4 Div 1 and Div 2 Class II Groups E, F & G Bolted Enclosures		NEMA 12. NEMA 3/3R Industrial Use Weatherproof Class III	
							Catalog No	Price $	Catalog No	Price $	Catalog No	Price $	Catalog No	Price $
1½	1½	2	2	9	00	—	14BP82B*81		Use Size 0	—	Use Size 0	—	Use Size 0	—
3	3	5	5	18	0	—	14CP82B*81		14CP82@*81		14CP82H*81		14CP820*81	
7½	7½	10	10	27	1	—	14DP82B*81		14DP82@*81		14DP82H*81		14DP820*81	
10	10	15	15	40	—	1 3/4	14EP82B*81		14EP82@*81		14EP82H*81		14EP820*81	
10	15	25	25	45	2	—	14FP82B*81		14FP82@*81		14FP82H*81		14FP820*81	
15	20	30	30	60	—	2 1/2	14GP82B*81		14GP82@*81		14GP82H*81		14GP820*81	
25	30	50	50	90	3	—	14HP82B*81		14HP82@*81		14HP82H*81		14HP820*81	
30	40	75	75	115	—	3 1/2	14IP82B*81		14IP82@*81		14IP82H*81		14IP820*81	

Note: Hp's shown above are based on the overload amp range for the FLA's (per the National Electric Code) of typical industrial motors. All Starter Sizes carry one maximum Hp rating. **For higher Hp single phase motors, use 3-phase starters, wire and set per diagram on page 17-175.**

① To receive a single phase starter in an extra wide enclosure order an enclosure kit from pg 9/113 and the open style starter from pg 9/13 or 9/15 as separate items.

② Coils D, F, or G will be wired for incoming voltage. J coil will be wired for separate source. Coils E, H, and L do not apply to single phase starters.

③ Standard Auxiliary Contacts, Same as Contactors, refer to page 9/60.

Features and Benefits

General

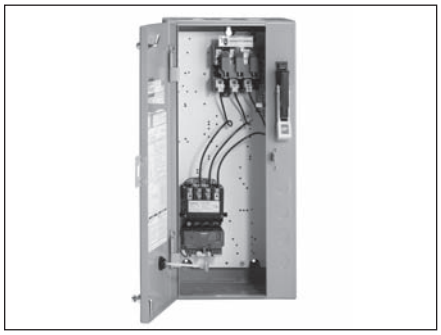

Combination Starter Features

Combination starters include the following features:

- Manufactured with Cold Forming "TOX" Process
- Solid State Overloads Standard on Sizes 5–8
- Easy to Install
- Wide Range of Enclosure Types Available
- Heavy Duty Quarter Turns
- 100kA Short Circuit Current Rating when Protected with Class R Fuses to 600V or MCP to 480V
- Visible Blade Disconnect
- Industrial Type Disconnect Handle
- UL listed file #E185287 (class 17, 18, 25, 26 & 32)
- CSA certified file #LR 6535 (class 17, 18, 25, 26 & 32)

Application

A combination starter meets National Electrical Code requirements for:

1. A means of providing short circuit motor protection with fused or breaker disconnection of line voltage.

2. A means of safeguarding personnel from contact with live parts and from accidental starting of machinery by disconnecting the motor and the controller.

3. A motor controller with overload protection.

Prewired combination starters eliminate the cost of wiring between separate disconnect and starter. Factory testing assures field performance. Combination starters also provide a more compact and attractive installation than separate units.

Enclosure Types

Combination starters are available in NEMA 1, 12/3/3R/4 (painted), 4/4X (stainless), 4X fiberglass and 7 & 9 enclosures. Enclosures protect personnel from contact with live parts and depending upon the construction, protect the control in varying degrees from physical damage and harmful atmospheres. All enclosures are supplied with corrosion resistant finishes.

Heavy Duty Disconnect Switches

The disconnect switch that goes the distance in durability, performance and reliability has the following advantages:

- Visible blades for the highest level of safety
- Double break switching action to reduce arcing, increase lifetime and eliminate the "electric hinge"
- More rugged positive action switch
- Oversized lugs are standard
- Line side shield to help guard personnel from contact with live parts
- Higher horsepower rating for design E high efficiency motors
- UL listed for Ilsco, Burndy and T&B crimp type lugs
- The 200A switch accepts up to 300 MCM versus 250 MCM wire size

Its rugged construction - with a high fault withstand rating of 100kA at 600 VAC when fused with class R rated fuses - meets the most stringent industry standards set forth by the automotive, petro-chemical, and pulp and paper industries. UL recognized and CSA certified, our disconnect switches are available either non-fusible or fusible with class R and class J fuse clips.

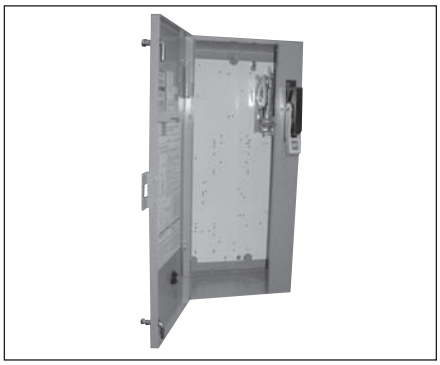

Enclosure Kits for NEMA Combination Starters Description

You can assemble a non-stocked combination starter per your unanticipated needs in minutes. Say, for example, your customer needs a fusible combination starter that you don't have in stock. You need in now, but don't sweat it. Simply start with the enclosure kit which has the handle preinstalled. You install the required starter and fusible disconnect, connect the power wire and you are finished. Within minutes, you have the required combination starter in your hands. No more waiting on the factory. You need it, you got it!

What Is In It For You!

- **Reduce Lead-time -** What used to take days to get now takes minutes
- **Reduced Inventory -** Instead of stocking scores of various combination starters, simply stock a few enclosure kits, disconnect kits, circuit breaker kits and open starters. With these basic "building blocks" you virtually have hundreds of products on-hand
- **Quality -** The same high level of quality you have been accustomed to with our products will also be found in these new enclosure kits
- **UL Listed -** By correctly following the instructions included with the kits, the product you build is UL/CSA Listed

Refer to page 9/115 for more details.

Siemens Type ETI Circuit Breaker

The ETI circuit breaker is a device designed specifically for application in motor circuits. The ETI is a magnetic only protective device designed to provide protection against short circuit current.

The instantaneous-only type ETI circuit breaker employs adjustable magnetic trip settings to allow broader application ranges and a higher degree of motor short circuit protection.

Heavy Duty Starters

These combination starters use the same starters described in the heavy duty starter section of this catalog.

Non-Fusible with Solid State Overload, Class 17

Selection

Ordering Information

- Replace the (*) with a letter from the coil table. Dual voltage coils are wired on high voltage unless specified on order.
- For Fusible Styles see page 9/20.
- Field Modification Kits see page 9/104.
- Factory Modifications see page 9/119.
- Dimensions see page 9/159.
- Wiring Diagrams see page 9/174.
- Replacement Parts see page 9/131.

Coil Table

60Hz Voltage	Letter
24	J
120	F
110–120/220–240①	A
200–208	D
220–240	G
277	L
220–240/440–480①	C
440–480	H
575–600	E

For other voltages and frequencies, see Factory Modifications page 9/119.

Standard Width Enclosure, 3 Phase, 3-Pole

Max Hp						Overload			Enclosure							
									NEMA 1 General Purpose		**NEMA 4/4X Stainless** Watertight, Dust-tight, Corrosion Resistant @ = W for 304 Stainless Steel @ = X for 316 Stainless Steel		**NEMA 4X Fiberglass** Watertight, Dust-tight Corrosion Resistant		**NEMA 12, NEMA 3/3R, NEMA 4 Painted (thru size 4)** Industrial Use Weatherproof Watertight, Dust-tight	
200 Volts	230 Volts	460 Volts	575 Volts	NEMA Size	Half Size	Amp Range	Frame Size	Disc. Amp Range	Catalog Number	List Price $	Catalog Number	List Price $	Catalog Number	List Price $	Catalog Number	List Price $
⅛	⅛	½	½	0	—	0.25–1	A	30	**17CUA92B***		**17CUA92@***		**17CUA92F***		**17CUA92N***	
½	¾	1½	2	0	—	0.75–3.4	A	30	**17CUB92B***		**17CUB92@***		**17CUB92F***		**17CUB92N***	
2	2	5	5	0	—	3–12	A1	30	**17CUC92B***		**17CUC92@***		**17CUC92F***		**17CUC92N***	
3	3	—	—	0	—	5.5–22	A1	30	**17CUD92B***		**17CUD92@***		**17CUD92F***		**17CUD92N***	
⅛	⅛	½	½	1	—	0.25–1	A	30	**17DUA92B***		**17DUA92@***		**17DUA92F***		**17DUA92N***	
½	¾	1½	2	1	—	0.75–3.4	A	30	**17DUB92B***		**17DUB92@***		**17DUB92F***		**17DUB92N***	
2	2	5	5	1	—	3–12	A1	30	**17DUC92B***		**17DUC92@***		**17DUC92F***		**17DUC92N***	
3	3	10	10	1	—	5.5–22	A1	30	**17DUD92B***		**17DUD92@***		**17DUD92F***		**17DUD92N***	
7½	7½	—	—	1	—	10–40	A1	60	**17DUE92B***		**17DUE92@***		**17DUE92F***		**17DUE92N***	
10	10	15	15	—	1¾	10–40	A1	60	**17EUE92B***		**17EUE92@***		**17EUE92F***		**17EUE92N***	
10	15	25	25	2	—	13–52	B	60	**17FUF92B***		**17FUF92@***		**17FUF92F***		**17FUF92N***	
15	20	30	30	—	2½	25–100	B	100②	**17GUG92B***		**17GUG92@***		**17GUG92F***		**17GUG92N***	
20③	25④	50	50	3	—	25–100	B	100	**17HUG92B***		**17HUG92@***		**17HUG92F***		**17HUG92N***	
30	40	75	75	—	3½	50–200	B	200	**17IUH92B***		**17IUH92@***		**17IUH92F***		**17IUH92N***	
40	50	100	100	4	—	50–200	B	200	**17JUH92B***		**17JUH92@***		**17JUH92F***		**17JUH92N***	
75	100	200	200	5	—	55–250	—	400⑤	**17LPU92B***		**17LPU92E*⑥**		—	—	**17LPU92N***	
150	200	400	400	6	—	160–630	—	600	**17MPX92B***		**17MPX92E*⑥**		—	—	**17MPX92N***	
—	300	600	600	7⑦	—	400–1220	A1+CT	1200	**17NUN92B***		—	—	—	—	**17NUN92N***	
—	450	900	900	8⑧	—	400–1220	A1+CT	1600	**17PUN92B***		—	—	—	—	**17PUN92N***	

Note: All starter sizes carry one maximum Hp rating (per the National Electric Code).

① Dual voltage coils not available in starter sizes 5–8.
② For 60A disconnect, order fusible cat. no. page 9/20
③ For 20 HP and 200A disconnect, order fusible cat. no. page 9/20.
④ For 25 HP and 200A disconnect, order fusible cat. no. page 9/20.
⑤ For 600A disconnect, order fusible cat. no. page 9/20.
⑥ Enclosure is NEMA Type 4 (painted steel).
⑦ F coil 100-250V AC 50/60Hz, or DC, H coil 150-500V AC 50/60Hz, or DC
⑧ Only available F coil 100-250V AC 50/60Hz, or DC

Non-Fusible with Solid State Overload, Class 17

Selection

Ordering Information

- Replace the (*) with a letter from the coil table. Dual voltage coils are wired on high voltage unless specified on order.
- For Fusible Styles see page 9/21.
- Field Modification Kits see page 9/104.
- Factory Modifications see page 9/119.
- Dimensions see page 9/159.
- Wiring Diagrams see page 9/174.
- Replacement Parts see page 9/131.

Coil Table

60Hz Voltage	Letter
24	J
120	F
110–120/220–240①	A
200–208	D
220–240	G
277	L
220–240/440–480①	C
440–480	H
575–600	E

For other voltages and frequencies, see Factory Modifications page 9/119.

Extra Wide Enclosure, 3-Phase, 3-Pole

Hp						Overload			Enclosure					
									NEMA 1 General Purpose		NEMA 4/4X Stainless Watertight, Dust-tight, Corrosion Resistant @ = W for 304 Stainless Steel @ = X for 316 Stainless Steel		NEMA 12, NEMA 3/3R, NEMA 4 Painted Industrial Use Weatherproof Watertight, Dust-tight	
200 Volts	230 Volts	460 Volts	575 Volts	NEMA Size	Half Size	Amp Range	Frame Size	Disc. Amp Range	Catalog Number	List Price $	Catalog Number	List Price $	Catalog Number	List Price $
⅛	⅛	⅓	½	0	—	0.25–1	A	30	**17CUA82B***		**17CUA82@***		**17CUA82N***	
½	¾	1½	2	0	—	0.75–3.4	A	30	**17CUB82B***		**17CUB82@***		**17CUB82N***	
2	2	5	5	0	—	3–12	A1	30	**17CUC82B***		**17CUC82@***		**17CUC82N***	
3	3	—	—	0	—	5.5–22	A1	30	**17CUD82B***		**17CUD82@***		**17CUD82N***	
⅛	⅛	⅓	½	1	—	0.25–1	A	30	**17DUA82B***		**17DUA82@***		**17DUA82N***	
½	¾	1½	2	1	—	0.75–3.4	A	30	**17DUB82B***		**17DUB82@***		**17DUB82N***	
2	2	5	5	1	—	3–12	A1	30	**17DUC82B***		**17DUC82@***		**17DUC82N***	
3	3	10	10	1	—	5.5–22	A1	30	**17DUD82B***		**17DUD82@***		**17DUD82N***	
7½	7½	—	—	1	—	10–40	A1	60	**17DUE82B***		**17DUE82@***		**17DUE82N***	
10	10	15	15	—	1¾	10–40	A1	60	**17EUE82B***		**17EUE82@***		**17EUE82N***	
10	15	25	25	2	—	13–52	B	60	**17FUF82B***		**17FUF82@***		**17FUF82N***	
15	20	30	30	—	2½	25–100	B	100①	**17GUG82B***		**17GUG82@***		**17GUG82N***	
20②	25③	50	50	3	—	25–100	B	100	**17HUG82B***		**17HUG82@***		**17HUG82N***	

Note: All starter sizes carry one maximum Hp rating (per the National Electric Code).

① For 60A disconnect, order fusible cat. no. page 9/21.
② For 20 HP and 200A disconnect, order fusible cat. no. page 9/21.
③ For 25 HP and 200A disconnect, order fusible cat. no. page 9/21.

Non-Fusible with Ambient Compensated Bimetal Overload, Class 17

Selection

Ordering Information

- Replace the (*) with a letter from the coil table. Dual voltage coils are wired on high voltage unless specified on order.
- Heater elements see page 9/124. (3 required)
- Field Modification Kits see page 9/104.
- Factory Modifications see page 9/119.
- Dimensions see page 9/159.
- Wiring Diagrams see page 9/174.
- Replacement Parts see page 9/131.
- For NO/NC SPDT contact on overload relay, replace "81" with "91". "81" indicates one NC contact.

Coil Table

60Hz Voltage	Letter
24	J
120	F
110–120/220–240	A
200–208	D
220–240	G
277	L
220–240/440–480	C
440–480	H
575–600	E

For other voltages and frequencies, see Factory Modifications page 9/119.

Standard Width Enclosure, 3-Phase, 3-Pole

Max Hp							Enclosure							
							NEMA 1 General Purpose		NEMA 4/4X Stainless Watertight, Dust-tight Corrosion Resistant @ = W for 304 Stainless Steel @ = X for 316 Stainless Steel		NEMA 4X Fiberglass Watertight, Dust-tight Corrosion Resistant Weatherproof		NEMA 12, NEMA 3/3R, NEMA 4 Painted Industrial Use Watertight, Dust-tight	
200 Volts	230 Volts	460 Volts	575 Volts	NEMA Size	Half Size	Disc Amp Rating	Catalog Number	List Price $	Catalog Number	List Price $	Catalog Number	List Price $	Catalog Number	List Price $
3	3	5	5	0	—	30	17CP92B*81		17CP92@*81		17CP92F*81		17CP92N*81	
7½	7½	10	10	1	—	30	17DP92B*81		17DP92@*81		17DP92F*81		17DP92N*81	
10	10	15	15	—	1¾	60	17EP92B*81		17EP92@*81		17EP92F*81		17EP92N*81	
10	15	25	25	2	—	60	17FP92B*81		17FP92@*81		17FP92F*81		17FP92N*81	
15	20	30	30	—	2½	100①	17GP92B*81		17GP92@*81		17GP92F*81		17GP92N*81	
25②	30③	50	50	3	—	100	17HP92B*81		17HP92@*81		17HP92F*81		17HP92N*81	
30	40	75	75	—	3½	200	17IP92B*81		17IP92@*81		17IP92F*81		17IP92N*81	
40	50	100	100	4	—	200	17JP92B*81		17JP92@*81		17JP92F*81		17JP92N*81	

Extra Wide Enclosure, 3-Phase, 3-Pole

Max Hp							Enclosure					
							NEMA 1 General Purpose		NEMA 4/4X Stainless Watertight, Dust-tight Corrosion Resistant @ = W for 304 Stainless Steel @ = X for 316 Stainless Steel		NEMA 12, NEMA 3/3R, NEMA 4 Painted Industrial Use Weatherproof Watertight, Dust-tight	
200 Volts	230 Volts	460 Volts	575 Volts	NEMA Size	Half Size	Disc Amp Rating	Catalog Number	List Price $	Catalog Number	List Price $	Catalog Number	List Price $
3	3	5	5	0	—	30	17CP82B*81		17CP82@*81		17CP82N*81	
7½	7½	10	10	1	—	30	17DP82B*81		17DP82@*81		17DP82N*81	
10	10	15	15	—	1¾	60	17EP82B*81		17EP82@*81		17EP82N*81	
10	15	25	25	2	—	60	17FP82B*81		17FP82@*81		17FP82N*81	
15	20	30	30	—	2½	100①	17GP82B*81		17GP82@*81		17GP82N*81	
25②	30③	50	50	3	—	100	17HP82B*81		17HP82@*81		17HP82N*81	

Standard Width Enclosure, Single Phase, (Catalog Numbers are three phase, wire for single phase in the field)

Max Hp					Enclosure							
					NEMA 1 General Purpose		NEMA 4/4X Stainless Watertight, Dust-tight Corrosion Resistant @ = W for 304 Stainless Steel @ = X for 316 Stainless Steel		NEMA 4X Fiberglass Watertight, Dust-tight Corrosion Resistant		NEMA 12, NEMA 3/3R, NEMA 4 Painted Industrial Use Weatherproof Watertight, Dust-tight	
115 Volts	208/230 Volts	NEMA Size	Half Size	Disc Amp Rating	Catalog Number	List Price $	Catalog Number	List Price $	Catalog Number	List Price $	Catalog Number	List Price $
1	2	0	—	30	17CP92B*81		17CP92@*81		17CP92F*81		17CP92N*81	
2	3	1	—	30	17DP92B*81		17DP92@*81		17DP92F*81		17DP92N*81	
3	5	1P	—	60	17EP92B*81		17EP92@*81		17EP92F*81		17EP92N*81	
3	7½	2	—	60	17FP92B*81		17FP92@*81		17FP92F*81		17FP92N*81	
5	10	—	2½	100①	17GP92B*81		17GP92@*81		17GP92F*81		17GP92N*81	

Note: Hp's shown above are based on the overload amp range for the FLA's (per the National Electric Code) of typical industrial motors. All starter sizes carry one maximum Hp rating.

① For 60A disc, order fusible cat. no. page 9/22.
② For 25 HP and 200A disconnect, order fusible cat. no. page 9/22.
③ For 30 HP and 200A disconnect, order fusible cat. no. page 9/22.

Fusible with Solid State Overload, Class 17

Selection

Ordering Information

- Replace the (*) with a letter from the coil table. Dual voltage coils are wired on high voltage unless specified on order.
- Field Modification Kits see page 9/104.
- Factory Modifications see page 9/119.
- Dimensions see page 9/159.
- Wiring Diagrams see page 9/174.
- Replacement Parts see page 9/131.

Coil Table

60Hz Voltage	Letter
24	J
120	F
110–120/220–240①	A
200–208	D
220–240	G
277	L
220–240/440–480①	C
440–480	H
575–600	E

For other voltages and frequencies, see Factory Modifications page 9/119.

Standard Width Enclosure, 3-Phase, 3-Pole④

Max Hp						Overload				Enclosure							
										NEMA 1 General Purpose		NEMA 4/4X Stainless Watertight, Dust-tight, Corrosion Resistant @ = W for 304 Stainless Steel @ = X for 316 Stainless Steel		NEMA 4X Fiberglass Watertight, Dust-tight Corrosion Resistant		NEMA 12, NEMA 3/3R, NEMA 4 Painted (thru size 4) Industrial Use Weatherproof Watertight, Dust-tight	
200 Volts	230 Volts	460 Volts	575 Volts	NEMA Size	Half Size	Amp Range	Frame Size	Disc. Amp Range	Fuse Clip Amp/Volts	Catalog Number	List Price $	Catalog Number	List Price $	Catalog Number	List Price $	Catalog Number	List Price $
⅛	⅛	—	—	0	—	0.25–1	A	30	30A/250V	**17CUA92B*10**		**17CUA92@*10**		**17CUA92F*10**		**17CUA92N*10**	
—	—	⅓	½	0	—	0.25–1	A	30	30A/600V	**17CUA92B*11**		**17CUA92@*11**		**17CUA92F*11**		**17CUA92N*11**	
½	¾	—	—	0	—	0.75–3.4	A	30	30A/250V	**17CUB92B*10**		**17CUB92@*10**		**17CUB92F*10**		**17CUB92N*10**	
—	—	1½	2	0	—	0.75–3.4	A	30	30A/600V	**17CUB92B*11**		**17CUB92@*11**		**17CUB92F*11**		**17CUB92N*11**	
2	2	—	—	0	—	3–12	A1	30	30A/250V	**17CUC92B*10**		**17CUC92@*10**		**17CUC92F*10**		**17CUC92N*10**	
—	—	5	5	0	—	3–12	A1	30	30A/600V	**17CUC92B*11**		**17CUC92@*11**		**17CUC92F*11**		**17CUC92N*11**	
3	3	—	—	0	—	5.5–22	A1	30	30A/250V	**17CUD92B*10**		**17CUD92@*10**		**17CUD92F*10**		**17CUD92N*10**	
⅛	⅛	—	—	1	—	0.25–1	A	30	30A/250V	**17DUA92B*10**		**17DUA92@*10**		**17DUA92F*10**		**17DUA92N*10**	
—	—	⅓	½	1	—	0.25–1	A	30	30A/600V	**17DUA92B*11**		**17DUA92@*11**		**17DUA92F*11**		**17DUA92N*11**	
½	¾	—	—	1	—	0.75–3.4	A	30	30A/250V	**17DUB92B*10**		**17DUB92@*10**		**17DUB92F*10**		**17DUB92N*10**	
—	—	1½	2	1	—	0.75–3.4	A	30	30A/600V	**17DUB92B*11**		**17DUB92@*11**		**17DUB92F*11**		**17DUB92N*11**	
2	2	—	—	1	—	3–12	A1	30	30A/250V	**17DUC92B*10**		**17DUC92@*10**		**17DUC92F*10**		**17DUC92N*10**	
—	—	5	5	1	—	3–12	A1	30	30A/600V	**17DUC92B*11**		**17DUC92@*11**		**17DUC92F*11**		**17DUC92N*11**	
3	3	—	—	1	—	5.5–22	A1	30	30A/250V	**17DUD92B*10**		**17DUD92@*10**		**17DUD92F*10**		**17DUD92N*10**	
—	—	10	10	1	—	5.5–22	A1	30	30A/600V	**17DUD92B*11**		**17DUD92@*11**		**17DUD92F*11**		**17DUD92N*11**	
7½	7½	—	—	1	—	10–40	A1	30	30A/250V	**17DUE92B*10**		**17DUE92@*10**		**17DUE92F*10**		**17DUE92N*10**	
7½	7½	—	—	1	—	10–40	A1	60	60A/250V	**17DUE92B*12**		**17DUE92@*12**		**17DUE92F*12**		**17DUE92N*12**	
—	—	15	15	—	1¾	10–40	A1	60	60A/600V	**17EUE92B*13**		**17EUE92@*13**		**17EUE92F*13**		**17EUE92N*13**	
10	10	—	—	—	1¾	10–40	A1	60	60A/250V	**17EUE92B*12**		**17EUE92@*12**		**17EUE92F*12**		**17EUE92N*12**	
10	15	—	—	2	—	13–52	B	60	60A/250V	**17FUF92B*12**		**17FUF92@*12**		**17FUF92F*12**		**17FUF92N*12**	
—	—	25	25	2	—	13–52	B	60	60A/600V	**17FUF92B*13**		**17FUF92@*13**		**17FUF92F*13**		**17FUF92N*13**	
—	—	—	30	—	2½	25–100	B	60	60A/600V	**17GUG92B*13**		**17GUG92@*13**		**17GUG92F*13**		**17GUG92N*13**	
—	—	30	—	—	2½	25–100	B	100	100A/600V	**17GUG92B*15**		**17GUG92@*15**		**17GUG92F*15**		**17GUG92N*15**	
15	20	—	—	—	2½	25–100	B	100	100A/250V	**17GUG92B*14**		**17GUG92@*14**		**17GUG92F*14**		**17GUG92N*14**	
20	25	—	—	3	—	25–100	B	100	100A/250V	**17HUG92B*14**		**17HUG92@*14**		**17HUG92F*14**		**17HUG92N*14**	
—	—	50	50	3	—	25–100	B	100	100A/600V	**17HUG92B*15**		**17HUG92@*15**		**17HUG92F*15**		**17HUG92N*15**	
25	30	—	—	3	—	25–100	B	200	200A/250V	**17HUG92B*16**		**17HUG92@*16**		**17HUG92F*16**		**17HUG92N*16**	
30	40	—	—	—	3½	50–200	B	200	200A/250V	**17IUH92B*16**		**17IUH92@*16**		**17IUH92F*16**		**17IUH92N*16**	
—	—	75	75	—	3½	50–200	B	200	200A/600V	**17IUH92B*17**		**17IUH92@*17**		**17IUH92F*17**		**17IUH92N*17**	
40	50	—	—	4	—	50–200	B	200	200A/250V	**17JUH92B*16**		**17JUH92@*16**		**17JUH92F*16**		**17JUH92N*16**	
—	—	100	100	4	—	50–200	B	200	200A/600V	**17JUH92B*17**		**17JUH92@*17**		**17JUH92F*17**		**17JUH92N*17**	
75	100	—	—	5	—	55–250	—	400	400A/250V	**17LPU92B*18**		**17LPU92E*18③**		—	—	**17LPU92N*18**	
—	100	—	—	5	—	55–250	—	600	600A/250V②	**17LPU92B*20**		**17LPU92E*20③**		—	—	**17LPU92N*20**	
—	—	—	125	5	—	55–250	—	200	200A/600V	**17LPU92B*17**		**17LPU92E*17③**		—	—	**17LPU92N*17**	
—	—	200	200	5	—	55–250	—	400	400A/600V	**17LPU92B*19**		**17LPU92E*19③**		—	—	**17LPU92N*19**	
—	—	200	—	5	—	55–250	—	600	600A/600V②	**17LPU92B*21**		**17LPU92E*21③**		—	—	**17LPU92N*21**	
150	200	—	—	6	—	160–630	—	600	600A/250V	**17MPX92B*20**		**17MPX92E*20③**		—	—	**17MPX92N*20**	
—	—	400	400	6	—	160–630	—	600	600A/600V	**17MPX92B*21**		**17MPX92E*21③**		—	—	**17MPX92N*21**	
—	—	400	400	6	—	160–630	—	800	800A/600V	**17MPX92B*23**		**17MPX92E*23③**		—	—	**17MPX92N*23**	
—	—	600	600	7⑤	—	400–1220	A1+CT	1200	1200A/600V	**17NUN92B*24**		—	—	—	—	**17NUN92N*24**	
—	—	900	900	8⑥	—	400–1220	A1+CT	1600	1600A/600V	**17PUN92B*25**		—	—	—	—	**17PUN92N*25**	

Note: All starter sizes carry one maximum Hp rating (per the National Electric Code).

① Dual voltage coils not available in starter sizes 5–8.
② Use Class J fuses only.
③ Enclosure is NEMA Type 4 (painted steel).
④ Single phase wiring page 9/173.
⑤ F coil 100-250V AC 50/60Hz, or DC, H coil 150-500V AC 50/60Hz, or DC
⑥ Only available F coil 100-250V AC 50/60Hz, or DC

Fusible with Solid State Overload, Class 17

Selection

Ordering Information

- Replace the (*) with a letter from the coil table. Dual voltage coils are wired on high voltage unless specified on order.
- Field Modification Kits see page 9/104.
- Factory Modifications see page 9/119.
- Dimensions see page 9/159.
- Wiring Diagrams see page 9/174.
- Replacement Parts see page 9/131.

Coil Table

60Hz Voltage	Letter
24	J
120	F
110–120/220–240	A
200–208	D
220–240	G
277	L
220–240/440–480	C
440–480	H
575–600	E

For other voltages and frequencies, see Factory Modifications page 9/119.

Extra Wide Enclosure, 3-Phase, 3-Pole

Max Hp						Overload				Enclosure					
										NEMA 1 General Purpose		NEMA 4/4X Stainless Watertight, Dust-tight, @ = W for 304 Stainless Steel @ = X for 316 Stainless Steel		NEMA 12, NEMA 3/3R, NEMA 4 Painted Industrial Use Weatherproof Watertight, Dust-tight	
200 Volts	230 Volts	460 Volts	575 Volts	NEMA Size	Half Size	Amp Range	Frame Size	Disc. Amp Range	Fuse Clip Amp/Volts	Catalog Number	List Price $	Catalog Number	List Price $	Catalog Number	List Price $
⅛	⅛	—	—	0	—	0.25–1	A	30	30A/250V	**17CUA82B*10**		**17CUA82@*10**		**17CUA82N*10**	
—	—	⅓	½	0	—	0.25–1	A	30	30A/600V	**17CUA82B*11**		**17CUA82@*11**		**17CUA82N*11**	
½	¾	—	—	0	—	0.75–3.4	A	30	30A/250V	**17CUB82B*10**		**17CUB82@*10**		**17CUB82N*10**	
—	—	1½	2	0	—	0.75–3.4	A	30	30A/600V	**17CUB82B*11**		**17CUB82@*11**		**17CUB82N*11**	
2	2	—	—	0	—	3–12	A1	30	30A/250V	**17CUC82B*10**		**17CUC82@*10**		**17CUC82N*10**	
—	—	5	5	0	—	3–12	A1	30	30A/600V	**17CUC82B*11**		**17CUC82@*11**		**17CUC82N*11**	
3	3	—	—	0	—	5.5–22	A1	30	30A/250V	**17CUD82B*10**		**17CUD82@*10**		**17CUD82N*10**	
⅛	⅛	—	—	1	—	0.25–1	A	30	30A/250V	**17DUA82B*10**		**17DUA82@*10**		**17DUA82N*10**	
—	—	⅓	½	1	—	0.25–1	A	30	30A/600V	**17DUA82B*11**		**17DUA82@*11**		**17DUA82N*11**	
½	¾	—	—	1	—	0.75–3.4	A	30	30A/250V	**17DUB82B*10**		**17DUB82@*10**		**17DUB82N*10**	
—	—	1½	2	1	—	0.75–3.4	A	30	30A/600V	**17DUB82B*11**		**17DUB82@*11**		**17DUB82N*11**	
2	2	—	—	1	—	3–12	A1	30	30A/250V	**17DUC82B*10**		**17DUC82@*10**		**17DUC82N*10**	
—	—	5	5	1	—	3–12	A1	30	30A/600V	**17DUC82B*11**		**17DUC82@*11**		**17DUC82N*11**	
3	3	—	—	1	—	5.5–22	A1	30	30A/250V	**17DUD82B*10**		**17DUD82@*10**		**17DUD82N*10**	
—	—	10	10	1	—	5.5–22	A1	30	30A/600V	**17DUD82B*11**		**17DUD82@*11**		**17DUD82N*11**	
5	5	—	—	1	—	10–40	A1	30	30A/250V	**17DUE82B*10**		**17DUE82@*10**		**17DUE82N*10**	
7½	7½	—	—	1	—	10–40	A1	60	60A/250V	**17DUE82B*12**		**17DUE82@*12**		**17DUE82N*12**	
—	—	15	15	—	1¾	10–40	A1	60	60A/600V	**17EUE82B*13**		**17EUE82@*13**		**17EUE82N*13**	
10	10	—	—	—	1¾	10–40	A1	60	60A/250V	**17EUE82B*12**		**17EUE82@*12**		**17EUE82N*12**	
10	15	—	—	2	—	13–52	B	60	60A/250V	**17FUF82B*12**		**17FUF82@*12**		**17FUF82N*12**	
—	—	25	25	2	—	13–52	B	60	60A/600V	**17FUF82B*13**		**17FUF82@*13**		**17FUF82N*13**	
—	—	—	30	—	2½	25–100	B	60	60A/600V	**17GUG82B*13**		**17GUG82@*13**		**17GUG82N*13**	
—	—	30	—	—	2½	25–100	B	100	100A/600V	**17GUG82B*15**		**17GUG82@*15**		**17GUG82N*15**	
15	20	—	—	—	2½	25–100	B	100	100A/250V	**17GUG82B*14**		**17GUG82@*14**		**17GUG82N*14**	
20	25	—	—	3	—	25–100	B	100	100A/250V	**17HUG82B*14**		**17HUG82@*14**		**17HUG82N*14**	
—	—	50	50	3	—	25–100	B	100	100A/600V	**17HUG82B*15**		**17HUG82@*15**		**17HUG82N*15**	
25	30	—	—	3	—	25–100	B	200	200A/250V	**17HUG82B*16**		**17HUG82@*16**		**17HUG82N*16**	

Note: All starter sizes carry one maximum Hp rating (per the National Electric Code).

Fusible with Ambient Compensated Bimetal Overload, Class 17

Selection

Ordering Information

- Replace the (*) with a letter from the coil table. Dual voltage coils are wired on high voltage unless specified on order.
- Heater elements see page 9/124. (3 required)
- Field Modification Kits see page 9/104.
- Factory Modifications see page 9/119.
- Dimensions see page 9/159.
- Wiring Diagrams see page 9/174.
- Replacement Parts see page 9/131.
- For NO/NC SPDT contact on overload relay, replace "81" with "91". "81" indicates one NC contact.

Coil Table

60Hz Voltage	Letter
24	J
120	F
110–120/220–240	A
200–208	D
220–240	G
277	L
220–240/440–480	C
440–480	H
575–600	E

For other voltages and frequencies, see Factory Modifications page 9/119.

Standard Width Enclosure, 3-Phase, 3-Pole①

Max Hp								Enclosure							
								NEMA 1 General Purpose		NEMA 4/4X Stainless Watertight, Dust-tight Corrosion Resistant @ = W for 304 Stainless Steel @ = X for 316 Stainless Steel		NEMA 4X Fiberglass Watertight, Dust-tight Corrosion Resistant		NEMA 12, NEMA 3/3R, NEMA 4 Painted Industrial Use Weatherproof Watertight, Dust-tight	
200 Volts	230 Volts	460 Volts	575 Volts	NEMA Size	Half Size	Disc Amp Rating	Fuse Clip Size Amps/Volts	Catalog Number	List Price $	Catalog Number	List Price $	Catalog Number	List Price $	Catalog Number	List Price $
3	3	—	—	0	—	30	30A/250V	17CP92B*1081		17CP92@*1081		17CP92F*1081		17CP92N*1081	
—	—	5	5	0	—	30	30A/600V	17CP92B*1181		17CP92@*1181		17CP92F*1181		17CP92N*1181	
5	5	—	—	1	—	30	30A/250V	17DP92B*1081		17DP92@*1081		17DP92F*1081		17DP92N*1081	
—	—	10	10	1	—	30	30A/600V	17DP92B*1181		17DP92@*1181		17DP92F*1181		17DP92N*1181	
7½	7½	—	—	1	—	60	60A/250V	17DP92B*1281		17DP92@*1281		17DP92F*1281		17DP92N*1281	
10	10	—	—	—	1¾	60	60A/250V	17EP92B*1281		17EP92@*1281		17EP92F*1281		17EP92N*1281	
—	—	15	15	—	1¾	60	60A/600V	17EP92B*1381		17EP92@*1381		17EP92F*1381		17EP92N*1381	
10	15	—	—	2	—	60	60A/250V	17FP92B*1281		17FP92@*1281		17FP92F*1281		17FP92N*1281	
—	—	25	25	2	—	60	60A/600V	17FP92B*1381		17FP92@*1381		17FP92F*1381		17FP92N*1381	
—	—	—	30	—	2½	60	60A/600V	17GP92B*1381		17GP92@*1381		17GP92F*1381		17GP92N*1381	
—	—	30	—	—	2½	100	100A/600V	17GP92B*1581		17GP92@*1581		17GP92F*1581		17GP92N*1581	
15	20	—	—	—	2½	100	100A/250V	17GP92B*1481		17GP92@*1481		17GP92F*1481		17GP92N*1481	
20	25	—	—	3	—	100	100A/250V	17HP92B*1481		17HP92@*1481		17HP92F*1481		17HP92N*1481	
—	—	50	50	3	—	100	100A/600V	17HP92B*1581		17HP92@*1581		17HP92F*1581		17HP92N*1581	
25	30	—	—	3	—	200	200A/250V	17HP92B*1681		17HP92@*1681		17HP92F*1681		17HP92N*1681	
30	40	—	—	—	3½	200	200A/250V	17IP92B*1681		17IP92@*1681		17IP92F*1681		17IP92N*1681	
—	—	75	75	—	3½	200	200A/600V	17IP92B*1781		17IP92@*1781		17IP92F*1781		17IP92N*1781	
40	50	—	—	4	—	200	200A/250V	17JP92B*1681		17JP92@*1681		17JP92F*1681		17JP92N*1681	
—	—	100	100	4	—	200	200A/600V	17JP92B*1781		17JP92@*1781		17JP92F*1781		17JP92N*1781	

Extra Wide Enclosure, 3-Phase, 3-Pole

Max Hp								Enclosure					
								NEMA 1 General Purpose		NEMA 4/4X Stainless Watertight, Dust-tight Industrial Use Weatherproof @ = W for 304 Stainless Steel @ = X for 316 Stainless Steel		NEMA 12, NEMA 3/3R, NEMA 4 Painted Industrial Use Weatherproof Watertight, Dust-tight	
200 Volts	230 Volts	460 Volts	575 Volts	NEMA Size	Half Size	Disc Amp Rating	Fuse Clip Size Amps/Volts	Catalog Number	List Price $	Catalog Number	List Price $	Catalog Number	List Price $
3	3	—	—	0	—	30	30A/250V	17CP82B*1081		17CP82@*1081		17CP82N*1081	
—	—	5	5	0	—	30	30A/600V	17CP82B*1181		17CP82@*1181		17CP82N*1181	
5	5	—	—	1	—	30	30A/250V	17DP82B*1081		17DP82@*1081		17DP82N*1081	
—	—	10	10	1	—	30	30A/600V	17DP82B*1181		17DP82@*1181		17DP82N*1181	
7½	7½	—	—	1	—	60	60A/250V	17DP82B*1281		17DP82@*1281		17DP82N*1281	
10	10	—	—	—	1¾	60	60A/250V	17EP82B*1281		17EP82@*1281		17EP82N*1281	
—	—	15	15	—	1¾	60	60A/600V	17EP82B*1381		17EP82@*1381		17EP82N*1381	
10	15	—	—	2	—	60	60A/250V	17FP82B*1281		17FP82@*1281		17FP82N*1281	
—	—	25	25	2	—	60	60A/600V	17FP82B*1381		17FP82@*1381		17FP82N*1381	
—	—	—	30	—	2½	60	60A/600V	17GP82B*1381		17GP82@*1381		17GP82N*1381	
—	—	30	—	—	2½	100	100A/600V	17GP82B*1581		17GP82@*1581		17GP82N*1581	
15	20	—	—	—	2½	100	100A/250V	17GP82B*1481		17GP82@*1481		17GP82N*1481	
20	25	—	—	3	—	100	100A/250V	17HP82B*1481		17HP82@*1481		17HP82N*1481	
—	—	50	50	3	—	100	100A/600V	17HP82B*1581		17HP82@*1581		17HP82N*1581	
25	30	—	—	3	—	200	200A/250V	17HP82B*1681		17HP82@*1681		17HP82N*1681	

Note: Hp's shown above are based on the overload amp range for the FLA's (per the National Electric Code) of typical industrial motors. All starter sizes carry one maximum Hp rating.

① Single phase wiring page 9/173.

MCP Type with Solid State Overload, Class 18

Selection

Ordering Information

- Replace the (*) with a letter from the coil table. Dual voltage coils are wired on high voltage unless specified on order.
- Field Modification Kits see page 9/104.
- Factory Modifications see page 9/119.
- Dimensions see page 9/159.
- Wiring Diagrams see page 9/174.
- Replacement Parts see page 9/131.

Coil Table

60Hz Voltage	Letter
24	J
120	F
110–120/220–240①	A
200–208	D
220–240	G
277	L
220–240/440–480①	C
440–480	H
575–600	E

For other voltages and frequencies, see Factory Modifications page 9/119.

Standard Width Enclosure, 3-Phase, 3-Pole

Max Hp							Overload		Enclosure									
									NEMA 1 General Purpose		NEMA 4/4X Stainless Watertight, Dust-tight, Corrosion Resistant @ = W for 304 Stainless Steel @ = X for 316 Stainless Steel		NEMA 4X Fiberglass Watertight, Dust-tight Corrosion Resistant		NEMA 7 & 9 NEMA 3 & 4 Div. 1 and Div. 2 Class I Groups C & D Class II Groups E, F & G Class III Bolted Enclosures Indoor/Outdoor Use		NEMA 12, NEMA 3/3R, NEMA 4 Painted (thru size 4) Industrial Use Weatherproof Watertight, Dust-tight	
200 Volts	230 Volts	460 Volts	575 Volts	NEMA Size	Half Size	Motor Circuit Interruter ETI Amps	Amp Range	Frame Size	Catalog Number	List Price $	Catalog Number	List Price $	Catalog Number	List Price $	Catalog Number	List Price $	Catalog Number	List Price $
½	½	1	1	0	—	3	0.75–3.4	A	18CUB92B*		18CUB92@*		18CUB92F*		18CUB92H*		18CUB92N*	
2	2	5	5	0	—	10	3–12	A1	18CUC92B*		18CUC92@*		18CUC92F*		18CUC92H*		18CUC92N*	
3	3	—	—	0	—	25	5.5–22	A1	18CUD92B*		18CUD92@*		18CUD92F*		18CUD92H*		18CUD92N*	
½	½	1	1	1	—	3	0.75–3.4	A	18DUB92B*		18DUB92@*		18DUB92F*		18DUB92H*		18DUB92N*	
2	2	5	5	1	—	10	3–12	A1	18DUC92B*		18DUC92@*		18DUC92F*		18DUC92H*		18DUC92N*	
3	3	7½	10	1	—	25	5.5–22	A1	18DUD92B*		18DUD92@*		18DUD92F*		18DUD92H*		18DUD92N*	
7½	7½	10	—	1	—	30	10–40	A1	18DUE92B*		18DUE92@*		18DUE92F*		18DUE92H*		18DUE92N*	
—	—	15	15	—	1¾	40	10–40	A1	18EUE92B*		18EUE92@*		18EUE92F*		18EUE92H*		18EUE92N*	
10	15	25	25	2	—	50	13–52	B	18FUF92B*		18FUF92@*		18FUF92F*		18FUF92H*		18FUF92N*	
15	20	30	30	—	2½	100	25–100	B	18GUG92B*		18GUG92@*		18GUG92F*		18GUG92H*		18GUG92N*	
25	30	50	50	3	—	125	25–100	B	18HUG92B*		18HUG92@*		18HUG92F*		18HUG92H*		18HUG92N*	
30	40	75	75	—	3½	125	50–200	B	18IUH92B*		18IUH92@*		18IUH92F*		18IUH92H*		18IUH92N*	
40	50	100	100	4	—	150	50–200	B	18JUH92B*		18JUH92@*		18JUH92F*		18JUH92H*		18JUH92N*	
50	75	150	200	5	—	250	55–250	—	18LPT92B*		18LPT92E*②		—	—	18LPT92H*		18LPT92N*	
75	100	200	—	5	—	400	55–250	—	18LPU92B*		18LPU92E*②		—	—	—	—	18LPU92N*	
100	125	250	300	6	—	400	160–630	—	18MPW92B*		18MPW92E*②		—	—	—	—	18MPW92N*	
150	200	400	400	6	—	600	160–630	—	18MPX92B*		18MPX92E*②		—	—	—	—	18MPX92N*	
—	250	500	500	7③	—	800	400–1220	A1+CT	18NUV92B*		—	—	—	—	—	—	18NUV92N*	
—	300	600	600	7③	—	1000	400–1220	A1+CT	18NUY92B*		—	—	—	—	—	—	18NUY92N*	
—	400	800	800	8④	—	1200	400–1220	A1+CT	18PUW92B*		—	—	—	—	—	—	18PUW92N*	
—	450	900	900	8④	—	1600	400–1220	A1+CT	18PUZ92B*		—	—	—	—	—	—	18PUZ92N*	

Note: All starter sizes carry one maximum Hp rating (per the National Electric Code).

① Dual voltage coils not available in starter sizes 5–8.

② Enclosure is NEMA Type 4 (painted steel).

③ F coil 100-250V AC 50/60Hz, or DC, H coil 150-500V AC 50/60Hz, or DC

④ Only available F coil 100-250V AC 50/60Hz, or DC

MCP Type with Solid State Overload, Class 18

Selection

Ordering Information

- Replace the (*) with a letter from the coil table. Dual voltage coils are wired on high voltage unless specified on order.
- Field Modification Kits see page 9/104.
- Factory Modifications see page 9/119.
- Dimensions see page 9/159.
- Wiring Diagrams see page 9/174.
- Replacement Parts see page 9/131.

Coil Table

60Hz Voltage	Letter
24	J
120	F
110–120/220–240	A
200–208	D
220–240	G
277	L
220–240/440–480	C
440–480	H
575–600	E

For other voltages and frequencies, see Factory Modifications page 9/119.

Extra Wide Enclosure, 3-Phase, 3-Pole

Max Hp							Overload		Enclosure					
									NEMA 1 General Purpose		**NEMA 4/4X Stainless** Watertight, Dust-tight, Corrosion Resistant @ = W for 304 Stainless Steel @ = X for 316 Stainless Steel		**NEMA 12, NEMA 3/3R, NEMA 4 Painted** Industrial Use Weatherproof Watertight, Dust-tight	
200 Volts	**230 Volts**	**460 Volts**	**575 Volts**	**NEMA Size**	**Half Size**	**Motor Circuit Interruter ETI Amps**	**Amp Range**	**Frame Size**	**Catalog Number**	**List Price $**	**Catalog Number**	**List Price $**	**Catalog Number**	**List Price $**
½	½	1	1	0	—	3	0.75–3.4	A	**18CUB82B***		**18CUB82@***		**18CUB82N***	
2	2	5	5	0	—	10	3–12	A1	**18CUC82B***		**18CUC82@***		**18CUC82N***	
3	3	—	—	0	—	25	5.5–22	A1	**18CUD82B***		**18CUD82@***		**18CUD82N***	
½	½	1	1	1	—	3	0.75–3.4	A	**18DUB82B***		**18DUB82@***		**18DUB82N***	
2	2	5	5	1	—	10	3–12	A1	**18DUC82B***		**18DUC82@***		**18DUC82N***	
3	3	7½	10	1	—	25	5.5–22	A1	**18DUD82B***		**18DUD82@***		**18DUD82N***	
7½	7½	10	—	1	—	30	10–40	A1	**18DUE82B***		**18DUE82@***		**18DUE82N***	
—	—	15	15	—	1¾	40	10–40	A1	**18EUE82B***		**18EUE82@***		**18EUE82N***	
10	15	25	25	2	—	50	13–52	B	**18FUF82B***		**18FUF82@***		**18FUF82N***	
15	20	30	30	—	2½	100	25–100	B	**18GUG82B***		**18GUG82@***		**18GUG82N***	
25	30	50	50	3	—	125	25–100	B	**18HUG82B***		**18HUG82@***		**18HUG82N***	

Note: All starter sizes carry one maximum Hp rating (per the National Electric Code).

MCP Type with Ambient Compensated Bimetal Overload, Class 18

Selection

Ordering Information

- Replace the (*) with a letter from the coil table. Dual voltage coils are wired on high voltage unless specified on order.
- Heater elements see page 9/124. (3 required)
- Field Modification Kits see page 9/104.
- Factory Modifications see page 9/119.
- Dimensions see page 9/159.
- Wiring Diagrams see page 9/174.
- Replacement Parts see page 9/131.
- For NO/NC SPDT contact on overload relay, replace "81" with "91". "81" indicates one NC contact.

Coil Table

60Hz Voltage	Letter
24	J
120	F
110–120/220–240	A
200–208	D
220–240	G
277	L
220–240/440–480	C
440–480	H
575–600	E

For other voltages and frequencies, see Factory Modifications page 9/119.

Standard Width Enclosure, 3-Phase, 3-Pole

Max Hp							Enclosure									
							NEMA 1 General Purpose Watertight, Dust-tight		NEMA 4/4X Stainless Watertight, Dust-tight Corrosion Resistant @ = W for 304 Stainless Steel @ = X for 316 Stainless Steel		NEMA 4X Fiberglass NEMA 3 & 4 Corrosion Resistant Class I Groups C & D Class II Groups E, F & G		NEMA 7 & 9 Div 1 and Div 2 Weatherproof Watertight, Dust-tight Class III Bolted Enclosures Indoor/Outdoor Use		NEMA 12,NEMA 3/3R, NEMA 4 Painted Industrial Use	
200 Volts	230 Volts	460 Volts	575 Volts	NEMA Size	Half Size	Motor Circuit Interrupter ETI Amps	Catalog Number	List Price $	Catalog Number	List Price $	Catalog Number	List Price $	Catalog Number	List Price $	Catalog Number	List Price $
½	½	1	1	0	—	3	18CP92BA*81		18CP92@A*81		18CP92FA*81		18CP92HA*81		18CP92NA*81	
1	1	3	3	0	—	10	18CP92BB*81		18CP92@B*81		18CP92FB*81		18CP92HB*81		18CP92NB*81	
3	3	5	5	0	—	25	18CP92BC*81		18CP92@C*81		18CP92FC*81		18CP92HC*81		18CP92NC*81	
½	½	1	1	1	—	3	18DP92BA*81		18DP92@A*81		18DP92FA*81		18DP92HA*81		18DP92NA*81	
1	1	3	3	1	—	10	18DP92BB*81		18DP92@B*81		18DP92FB*81		18DP92HB*81		18DP92NB*81	
3	3	7½	7½	1	—	25	18DP92BD*81		18DP92@D*81		18DP92FD*81		18DP92HD*81		18DP92ND*81	
7½	7½	10	10	1	—	30	18DP92BE*81		18DP92@E*81		18DP92FE*81		18DP92HE*81		18DP92NE*81	
—	—	15	15	—	1¾	40	18EP92BF*81		18EP92@F*81		18EP92FF*81		18EP92HF*81		18EP92NF*81	
10	10	—	—	—	1¾	50	18EP92BG*81		18EP92@G*81		18EP92FG*81		18EP92HG*81		18EP92NG*81	
—	—	20	20	2	—	40	18FP92BH*81		18FP92@H*81		18FP92FH*81		18FP92HH*81		18FP92NH*81	
10	15	25	25	2	—	50	18FP92BJ*81		18FP92@J*81		18FP92FJ*81		18FP92HJ*81		18FP92NJ*81	
10	15	30	30	—	2½	50	18GP92BK*81		18GP92@K*81		18GP92FK*81		18GP92HK*81		18GP92NK*81	
15	20	—	—	—	2½	100	18GP92BL*81		18GP92@L*81		18GP92FL*81		18GP92HL*81		18GP92NL*81	
—	—	30	30	3	—	50	18HP92BM*81		18HP92@M*81		18HP92FM*81		18HP92HM*81		18HP92NM*81	
25	30	50	50	3	—	125	18HP92BN*81		18HP92@N*81		18HP92FN*81		18HP92HN*81		18HP92NN*81	
30	40	75	75	—	3½	125	18IP92BP*81		18IP92@P*81		18IP92FP*81		18IP92HP*81		18IP92NP*81	
40	50	100	100	4	—	150	18JP92BR*81		18JP92@R*81		18JP92FR*81		18JP92HR*81		18JP92NR*81	

Extra Wide Enclosure, 3-Phase, 3-Pole

Max Hp							Enclosure					
							NEMA 1 General Purpose		NEMA 4/4X Stainless Watertight, Dust-tight Corrosion Resistant @=W for 304 Stainless Steel @=X for 316 Stainless Steel		NEMA 12, NEMA 3/3R, NEMA 4 Painted Industrial Use Weatherproof Watertight, Dust-tight	
200 Volts	230 Volts	460 Volts	575 Volts	NEMA Size	Half Size	Motor Circuit Interrupter ETI Amps	Catalog Number	List Price $	Catalog Number	List Price $	Catalog Number	List Price $
½	½	1	1	0	—	3	18CP82BA*81		18CP82@A*81		18CP82NA*81	
1	1	3	3	0	—	10	18CP82BB*81		18CP82@B*81		18CP82NB*81	
3	3	5	5	0	—	25	18CP82BC*81		18CP82@C*81		18CP82NC*81	
½	½	1	1	1	—	3	18DP82BA*81		18DP82@A*81		18DP82NA*81	
1	1	3	3	1	—	10	18DP82BB*81		18DP82@B*81		18DP82NB*81	
3	3	7½	7½	1	—	25	18DP82BD*81		18DP82@D*81		18DP82ND*81	
7½	7½	10	10	1	—	30	18DP82BE*81		18DP82@E*81		18DP82NE*81	
—	—	15	15	—	1¾	40	18EP82BF*81		18EP82@F*81		18EP82NF*81	
10	10	—	—	—	1¾	50	18EP82BG*81		18EP82@G*81		18EP82NG*81	
—	—	20	20	2	—	40	18FP82BH*81		18FP82@H*81		18FP82NH*81	
10	15	25	25	2	—	50	18FP82BJ*81		18FP82@J*81		18FP82NJ*81	
10	15	30	30	—	2½	50	18GP82BK*81		18GP82@K*81		18GP82NK*81	
15	20	—	—	—	2½	100	18GP82BL*81		18GP82@L*81		18GP82NL*81	
—	—	30	30	3	—	50	18HP82BM*81		18HP82@M*81		18HP82NM*81	
25	30	50	50	3	—	125	18HP82BN*81		18HP82@N*81		18HP82NN*81	

Note: Hp's shown above are based on the overload amp range for the FLA's (per the National Electric Code) of typical industrial motors. All starter sizes carry one maximum Hp rating.

Solid State Overload, Class 22

Selection

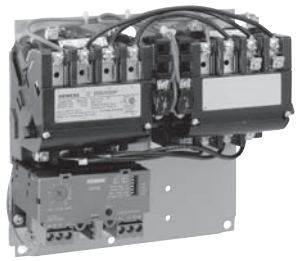

Ordering Information

- Replace the (*) with a letter from the coil table. Dual voltage coils are wired on high voltage unless specified on order.
- Field Modification Kits see page 9/104.
- Factory Modifications see page 9/119.
- Dimensions see page 9/142 open and 9/162 enclosed.
- Wiring Diagrams see page 9/176.

Coil Table

60Hz Voltage	Letter
24	J
120	F
110–120/220–240①	A
200–208	D
220–240	G
277	L
220–240/440–480①	C
440–480	H
575–600	E

For other voltages and frequencies, see Factory Modifications page 9/119.

Open Type & Standard Width Enclosure, 3-Phase, 3-Pole

Max Hp						Overload		Enclosure											
								Open Type Standard Auxiliary Contacts⑤		**NEMA 1** General Purpose		**NEMA 4/4X Stainless** Watertight, Dust-tight, Corrosion Resistant 304 Stainless Steel		**NEMA 4X Fiberglass** Watertight, Dust-tight Corrosion Resistant		**NEMA 7 & 9 NEMA 3 & 4** Div. 1 and Div. 2 Class I Groups C & D Class II Groups E, F & G Class III Bolted Enclosures Indoor/ Outdoor Use		**NEMA 12 NEMA 3/3R** Industrial Use Weatherproof	
200 Volts	**230 Volts**	**460 Volts**	**575 Volts**	**NEMA Size**	**Half Size**	**Amp Range**	**Frame Size**	**Catalog Number**	**List Price $**	**Catalog Number**	**List Price $**	**Catalog Number**	**List Price $**	**Catalog Number**	**List Price $**	**Catalog Number**	**List Price $**	**Catalog Number**	**List Price $**
⅛	⅛	⅓	½	00	—	0.25–1	A	**22BUA32A***		**22BUA32B***		**Use Size 0**	—	**Use Size 0**	—	**Use Size 0**	—	**Use Size 0**	—
½	¾	1½	2	00	—	0.75–3.4	A	**22BUB32A***		**22BUB32B***		**Use Size 0**	—	**Use Size 0**	—	**Use Size 0**	—	**Use Size 0**	—
1½	1½	2	—	00	—	3–12	A1	**22BUC32A***		**22BUC32B***		**Use Size 0**	—	**Use Size 0**	—	**Use Size 0**	—	**Use Size 0**	—
⅛	⅛	⅓	1/2	0	—	0.25–1	A	**22CUA32A***		**22CUA32B***		**22CUA32W***		**22CUA32F***		**22CUA32H***		**22CUA320***	
½	¾	1½	2	0	—	0.75–3.4	A	**22CUB32A***		**22CUB32B***		**22CUB32W***		**22CUB32F***		**22CUB32H***		**22CUB320***	
2	2	5	5	0	—	3–12	A1	**22CUC32A***		**22CUC32B***		**22CUC32W***		**22CUC32F***		**22CUC32H***		**22CUC320***	
3	3	—	—	0	—	5.5–22	A1	**22CUD32A***		**22CUD32B***		**22CUD32W***		**22CUD32F***		**22CUD32H***		**22CUD320***	
⅛	⅛	⅓	½	1	—	0.25–1	A	**22DUA32A***		**22DUA32B***		**22DUA32W***		**22DUA32F***		**22DUA32H***		**22DUA320***	
½	¾	1½	2	1	—	0.75–3.4	A	**22DUB32A***		**22DUB32B***		**22DUB32W***		**22DUB32F***		**22DUB32H***		**22DUB320***	
2	2	5	5	1	—	3–12	A1	**22DUC32A***		**22DUC32B***		**22DUC32W***		**22DUC32F***		**22DUC32H***		**22DUC320***	
3	3	10	10	1	—	5.5–22	A1	**22DUD32A***		**22DUD32B***		**22DUD32W***		**22DUD32F***		**22DUD32H***		**22DUD320***	
7½	7½	—	—	1	—	10–40	A1	**22DUE32A***		**22DUE32B***		**22DUE32W***		**22DUE32F***		**22DUE32H***		**22DUE320***	
10	10	15	15	—	1¾	10–40	A1	**22EUE32A***		**22EUE32B***		**22EUE32W***		**22EUE32F***		**22EUE32H***		**22EUE320***	
10	15	25	25	2	—	13–52	B	**22FUF32A***		**22FUF32B***		**22FUF32W***		**22FUF32F***		**22FUF32H***		**22FUF320***	
15	20	30	30	—	2½	25–100	B	**22GUG32A***		**22GUG32B***		**22GUG32W***		**22GUG32F***		**22GUG32H***		**22GUG320***	
25	30	50	50	3	—	25–100	B	**22HUG32A***		**22HUG32B***		**22HUG32W***		**22HUG32F***		**22HUG32H***		**22HUG320***	
30	40	75	75	—	3½	50–200	B	**22IUH32A***		**22IUH32B***		**22IUH32W***		**22IUH32F***		**22IUH32H***		**22IUH320***	
40	50	100	100	4	—	50–200	B	**22JUH32A***		**22JUH32B***		**22JUH32W***		**22JUH32F***		**22JUH32H***		**22JUH320***	
75	100	200	200	5	—	55–250	—	**22LPU32A***		**22LPU32B***		**22LPU32E***②		—	—	—	—	**22LPU320***	
150	200	400	400	6	—	160–630	—	**22MPX32A***		**22MPX32B***		**22MPX32E***②		—	—	—	—	**22MPX320***	
—	300	600	600	7③	—	400–1220	A1+CT	**22NUN32A***		**22NUN32B***		—	—	—	—	—	—	**22NUN320***	
—	450	900	900	8④	—	400–1220	A1+CT	**22PUN32A***		**22PUN32B***		—	—	—	—	—	—	**22PUN320***	

Note: All starter sizes carry one maximum Hp rating (per the National Electric Code).
① Dual voltage coils not available in size 5–8 starters.
② Enclosure is rated only NEMA 4 (painted steel).
③ Only available
F coil 100-250V AC 50/60Hz, or DC
H coil 150-500V AC 50/60Hz, or DC
④ Only available
F coil 100-250V AC 50/60Hz, or DC
⑤ Auxiliary contacts
22B-22E 4th pole built-in
22F-22J 2 NO & 2 NC

Ambient Compensated Bimetal Overload with Manual and Auto Reset, Class 22

Selection

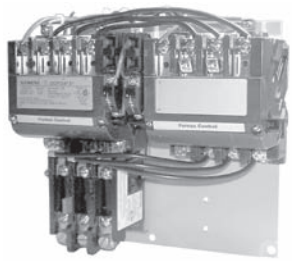

Ordering Information

- Replace the (*) with a letter from the coil table. Dual voltage coils are wired on high voltage unless specified on order.
- Heater elements see page 9/124. Single phase starters require 1 heater element. 3-phase starters require 3 heater elements.
- Field Modification Kits see page 9/104.
- Factory Modifications see page 9/119.
- Dimensions see pages 9/142 open and 9/162 enclosed.
- Wiring Diagrams see page 9/175.
- Replacement Parts see page 9/131.
- For NO/NC SPDT contact on overload relay, replace "81" with "91". "81" indicates one NC contact.

Coil Table

60Hz Voltage	Letter
24	J
120	F
110–120/220–240	A
200–208	D
220–240	G
277	L
220–240/440–480	C
440–480	H
575–600	E

For other voltages and frequencies, see Factory Modifications page 9/119.

Open Type & Standard Width Enclosure, 3-Phase, 3-Pole

Max Hp				Contactor Amp Rating	NEMA Size	Half Size	Enclosure											
							Open Type②		NEMA 1 General Purpose		NEMA 4/4X Stainless Watertight, Dust-tight Corrosion Resistant 304 Stainless Steel		NEMA 4X Fiberglass Watertight, Dust-tight Corrosion Resistant Indoor/Outdoor Use		NEMA 7 & 9 NEMA 3 & 4 Div 1 and Div 2 Class I Groups C & D Class II Groups E, F & G Class III Bolted Enclosures		NEMA 12 NEMA 3/3R Industrial Use Weatherproof	
200 Volts	230 Volts	460 Volts	575 Volts				Catalog Number	List Price $	Catalog Number	List Price $	Catalog Number	List Price $	Catalog Number	List Price $	Catalog Number	List Price $	Catalog Number	List Price $
1½	1½	2	2	9	00	—	**22BP32A*81**		**22BP32B*81**		Use Size 0	—	Use Size 0	—	Use Size 0	—	Use Size 0	—
3	3	5	5	18	0	—	**22CP32A*81**		**22CP32B*81**		**22CP32W*81**		**22CP32F*81**		**22CP32H*81**		**22CP320*81**	
7½	7½	10	10	27	1	—	**22DP32A*81**		**22DP32B*81**		**22DP32W*81**		**22DP32F*81**		**22DP32H*81**		**22DP320*81**	
10	10	15	15	40	—	1¾	**22EP32A*81**		**22EP32B*81**		**22EP32W*81**		**22EP32F*81**		**22EP32H*81**		**22EP320*81**	
10	15	25	25	45	2	—	**22FP32A*81**		**22FP32B*81**		**22FP32W*81**		**22FP32F*81**		**22FP32H*81**		**22FP320*81**	
15	20	30	30	60	—	2½	**22GP32A*81**		**22GP32B*81**		**22GP32W*81**		**22GP32F*81**		**22GP32H*81**		**22GP320*81**	
25	30	50	50	90	3	—	**22HP32A*81**		**22HP32B*81**		**22HP32W*81**		**22HP32F*81**		**22HP32H*81**		**22HP320*81**	
30	40	75	75	115	—	3½	**22IP32A*81**		**22IP32B*81**		**22IP32W*81**		**22IP32F*81**		**22IP32H*81**		**22IP320*81**	
40	50	100	100	135	4	—	**22JG32A*81**		**22JG32B*81**		**22JG32W*81**		**22JG32F*81**		**22JG32H*81**		**22JG320*81**	

Open Type & Standard Width Enclosure, Single Phase, 3-Wire, 2-Pole①

Max Hp				Enclosure											
				Open Type		NEMA 1 General Purpose		NEMA 4/4X Stainless Watertight, Dust-tight Corrosion Resistant 304 Stainless Steel		NEMA 4X Fiberglass Watertight, Dust-tight Corrosion Resistant		NEMA 7 & 9 NEMA 3 & 4 Div 1 and Div 2 Class I Groups C & D Class II Groups E, F & G Class III Bolted Enclosures Indoor/Outdoor Use		NEMA 12 NEMA 3/3R Industrial Use Weatherproof	
115 Volts	208/230 Volts	Contactor Amp Rating	NEMA Size	Catalog Number	List Price $	Catalog Number	List Price $	Catalog Number	List Price $	Catalog Number	List Price $	Catalog Number	List Price $	Catalog Number	List Price $
⅓	1	9	00	**22BP12A*81**		**22BP12B*81**		Use Size 0	—	Use Size 0	—	Use Size 0	—	Use Size 0	—
1	2	18	0	**22CP12A*81**		**22CP12B*81**		**22CP12W*81**		**22CP12F*81**		**22CP12H*81**		**22CP120*81**	
2	3	27	1	**22DP12A*81**		**22DP12B*81**		**22DP12W*81**		**22DP12F*81**		**22DP12H*81**		**22DP120*81**	
3	5	35	1P	**22EP12A*81**		**22EP12B*81**		**22EP12W*81**		**22EP12F*81**		**22EP12H*81**		**22EP120*81**	

Note: Hp's shown above are based on the overload amp range for the FLA's (per the National Electric Code) of typical industrial motors. All Starter Sizes carry one maximum Hp rating.

① Coil D, F, or G will be wired for Incoming Voltage. J coil will be wired for 24V separate source. Coils E, H, and L do not apply to single phase starters.

② Auxiliary contacts
22B-22E 4th pole built-in
22F-22J 2 NO & 2 NC

Non-Fusible, Class 25

Selection

Ordering Information

- Replace the (*) with a letter from the coil table. Dual voltage coils are wired on high voltage unless specified on order.
- Heater elements see page 9/124.
- Fuse clips see page 9/120.
- Field Modification Kits see page 9/104.
- Factory Modifications see page 9/119.
- Dimensions see page 9/164.
- Wiring Diagrams see page 9/177.
- Replacement Parts see page 9/131.
- For NO/NC SPDT contact on overload, replace "81" with "91". "81" indicates one NC contact.

Coil Table

60Hz Voltage	Letter
24	J
120	F
110–120/220–240①	A
200–208	D
220–240	G
277	L
220–240/440–480①	C
440–480	H
575–600	E

For other voltages and frequencies, see Factory Modifications page 9/119.

Standard Width Enclosure with Solid State Overload, 3-Phase, 3-Pole

Max Hp						Overload			Enclosure							
									NEMA 1 General Purpose		NEMA 4/4X Stainless Watertight, Dust-tight, Corrosion Resistant 304 Stainless Steel		NEMA 4X Fiberglass Watertight, Dust-tight Corrosion Resistant		NEMA 12, NEMA 3/3R, NEMA 4 Painted (thru size 4) Industrial Use Weatherproof Watertight, Dust-tight	
200 Volts	230 Volts	460 Volts	575 Volts	NEMA Size	Half Size	Amp Range	Frame Size	Disc. Amp Rating	Catalog Number	List Price $	Catalog Number	List Price $	Catalog Number	List Price $	Catalog Number	List Price $
⅛	⅛	⅓	½	0	—	0.25–1	A	30	**25CUA92B***		**25CUA92W***		**25CUA92F***		**25CUA92N***	
½	¾	1½	2	0	—	0.75–3.4	A	30	**25CUB92B***		**25CUB92W***		**25CUB92F***		**25CUB92N***	
2	2	5	5	0	—	3–12	A1	30	**25CUC92B***		**25CUC92W***		**25CUC92F***		**25CUC92N***	
3	3	—	—	0	—	5.5–22	A1	30	**25CUD92B***		**25CUD92W***		**25CUD92F***		**25CUD92N***	
⅛	⅛	⅓	½	1	—	0.25–1	A	30	**25DUA92B***		**25DUA92W***		**25DUA92F***		**25DUA92N***	
½	¾	1½	2	1	—	0.75–3.4	A	30	**25DUB92B***		**25DUB92W***		**25DUB92F***		**25DUB92N***	
2	2	5	5	1	—	3–12	A1	30	**25DUC92B***		**25DUC92W***		**25DUC92F***		**25DUC92N***	
3	3	10	10	1	—	5.5–22	A1	30	**25DUD92B***		**25DUD92W***		**25DUD92F***		**25DUD92N***	
7½	7½	—	—	1	—	10–40	A1	60	**25DUE92B***		**25DUE92W***		**25DUE92F***		**25DUE92N***	
10	10	15	15	—	1¾	10–40	A1	60	**25EUE92B***		**25EUE92W***		**25EUE92F***		**25EUE92N***	
10	15	25	25	2	—	13–52	B	60	**25FUF92B***		**25FUF92W***		**25FUF92F***		**25FUF92N***	
15	20	30	30	—	2½	25–100	B	100	**25GUG92B***		**25GUG92W***		**25GUG92F***		**25GUG92N***	
20	25	50	50	3	—	25–100	B	100	**25HUG92B***		**25HUG92W***		**25HUG92F***		**25HUG92N***	
30	40	75	75	—	3½	50–200	B	200	**25IUH92B***		**25IUH92W***		**25IUH92F***		**25IUH92N***	
40	50	100	100	4	—	50–200	B	200	**25JUH92B***		**25JUH92W***		**25JUH92F***		**25JUH92N***	
75	100	200	200	5	—	55–250	—	400	**25LPU92B***		**25LPU92E***②		—	—	**25LPU92N***	
150	200	400	400	6	—	160–630	—	600	**25MPX92B***		**25MPX92E***②		—	—	**25MPX92N***	
—	300	600	600	7③	—	400–1220	A1+CT	1200	**25NUN92B***		—	—	—	—	**25NUN92N***	
—	450	900	900	8④	—	400–1220	A1+CT	1600	**25PUN92B***		—	—	—	—	**25PUN92N***	

Standard Width Enclosure with Ambient Compensated Bimetal Overload, 3-Phase, 3-Pole

Max Hp							Enclosure							
							NEMA 1 General Purpose		NEMA 4/4X Stainless Watertight, Dust-tight Corrosion Resistant 304 Stainless Steel		NEMA 4X Fiberglass Watertight, Dust-tight Corrosion Resistant		NEMA 12 NEMA 3/3R NEMA 4 Painted Industrial Use Weatherproof Watertight, Dust-tight	
200 Volts	230 Volts	460 Volts	575 Volts	NEMA Size	Half Size	Disc Amp Rating	Catalog Number	List Price $	Catalog Number	List Price $	Catalog Number	List Price $	Catalog Number	List Price $
3	3	5	5	0	—	30	**25CP92B*81**		**25CP92W*81**		**25CP92F*81**		**25CP92N*81**	
7½	7½	10	10	1	—	30	**25DP92B*81**		**25DP92W*81**		**25DP92F*81**		**25DP92N*81**	
10	10	15	15	—	1¾	60	**25EP92B*81**		**25EP92W*81**		**25EP92F*81**		**25EP92N*81**	
10	15	25	25	2	—	60	**25FP92B*81**		**25FP92W*81**		**25FP92F*81**		**25FP92N*81**	
15	20	30	30	—	2½	100	**25GP92B*81**		**25GP92W*81**		**25GP92F*81**		**25GP92N*81**	
25	30	50	50	3	—	100	**25HP92B*81**		**25HP92W*81**		**25HP92F*81**		**25HP92N*81**	
30	40	75	75	—	3½	200	**25IP92B*81**		**25IP92W*81**		**25IP92F*81**		**25IP92N*81**	
40	50	100	100	4	—	200	**25JP92B*81**		**25JP92W*81**		**25JP92F*81**		**25JP92N*81**	

Note: All starter sizes carry one maximum Hp rating (per the National Electric Code).

① Dual voltage coils not available in starter sizes 5–8.

② Enclosure is NEMA Type 4 (painted steel).

③ F coil 100-250V AC 50/60Hz, or DC, H coil 150-500V AC 50/60Hz, or DC

④ Only available F coil 100-250V AC 50/60Hz, or DC

MCP Type, Class 26

Selection

Ordering Information

- Replace the (*) with a letter from the coil table. Dual voltage coils are wired on high voltage unless specified on order.
- Field Modification Kits see page 9/104.
- Factory Modifications see page 9/119.
- Dimensions see page 9/164.
- Wiring Diagrams see page 9/177.
- Replacement Parts see page 9/131.
- For NO/NC SPDT contact on overload relay, replace "81" with "91". "81" indicates one NC contact.

Coil Table

60Hz Voltage	Letter
24	J
120	F
110–120/220–240①	A
200–208	D
220–240	G
277	L
220–240/440–480①	C
440–480	H
575–600	E

For other voltages and frequencies, see Factory Modifications page 9/119.

Standard Width Enclosure with Solid State Overload, 3-Phase, 3-Pole

Max Hp							Overload		Enclosure									
									NEMA 1 General Purpose		NEMA 4/4X Stainless Watertight, Dust-tight, Corrosion Resistant 304 Stainless Steel		NEMA 4X Fiberglass Watertight, Dust-tight Corrosion Resistant		NEMA 7 & 9 NEMA 3 & 4 Div. 1 and Div. 2 Class I Groups C & D Class II Groups E, F & G Class III Bolted Enclosures Indoor/Outdoor Use		NEMA 12, NEMA 3/3R, NEMA 4 Painted (thru size 4) Industrial Use Weatherproof Watertight, Dust-tight	
200 Volts	230 Volts	460 Volts	575 Volts	NEMA Size	Half Size	Motor Circuit Interruter ETI Amps	Amp Range	Frame Size	Catalog Number	List Price $	Catalog Number	List Price $	Catalog Number	List Price $	Catalog Number	List Price $	Catalog Number	List Price $
½	½	1	1	0	—	3	0.75–3.4	A	**26CUB92B***		**26CUB92W***		**26CUB92F***		**26CUB92H***		**26CUB92N***	
2	2	5	5	0	—	10	3–12	A1	**26CUC92B***		**26CUC92W***		**26CUC92F***		**26CUC92H***		**26CUC92N***	
3	3	—	—	0	—	25	5.5–22	A1	**26CUD92B***		**26CUD92W***		**26CUD92F***		**26CUD92H***		**26CUD92N***	
½	½	1	1	1	—	3	0.75–3.4	A	**26DUB92B***		**26DUB92W***		**26DUB92F***		**26DUB92H***		**26DUB92N***	
2	2	5	5	1	—	10	3–12	A1	**26DUC92B***		**26DUC92W***		**26DUC92F***		**26DUC92H***		**26DUC92N***	
3	3	7½	10	1	—	25	5.5–22	A1	**26DUD92B***		**26DUD92W***		**26DUD92F***		**26DUD92H***		**26DUD92N***	
7½	7½	10	—	1	—	30	10–40	A1	**26DUE92B***		**26DUE92W***		**26DUE92F***		**26DUE92H***		**26DUE92N***	
—	—	15	15	—	1¾	40	10–40	A1	**26EUE92B***		**26EUE92W***		**26EUE92F***		**26EUE92H***		**26EUE92N***	
10	15	25	25	2	—	50	13–52	B	**26FUF92B***		**26FUF92W***		**26FUF92F***		**26FUF92H***		**26FUF92N***	
15	20	30	30	—	2½	100	25–100	B	**26GUG92B***		**26GUG92W***		**26GUG92F***		**26GUG92H***		**26GUG92N***	
25	30	50	50	3	—	125	25–100	B	**26HUG92B***		**26HUG92W***		**26HUG92F***		**26HUG92H***		**26HUG92N***	
30	40	75	75	—	3½	125	50–200	B	**26IUH92B***		**26IUH92W***		**26IUH92F***		**26IUH92H***		**26IUH92N***	
40	50	100	100	4	—	150	50–200	B	**26JUH92B***		**26JUH92W***		**26JUH92F***		**26JUH92H***		**26JUH92N***	
50	75	150	200	5	—	250	55–250	—	**26LPT92B***		**26LPT92E***②		—	—	—	—	**26LPT92N***	
75	100	200	—	5	—	400	55–250	—	**26LPU92B***		**26LPU92E***②		—	—	—	—	**26LPU92N***	
100	125	250	300	6	—	400	160–630	—	**26MPW92B***		**26MPW92E***②		—	—	—	—	**26MPW92N***	
150	200	400	400	6	—	600	160–630	—	**26MPX92B***		**26MPX92E***②		—	—	—	—	**26MPX92N***	
—	250	500	500	7*③	—	800	400–1220	A1+CT	**26NUV92B***		—	—	—	—	—	—	**26NUV92N***	
—	300	600	600	7*③	—	1000	400–1220	A1+CT	**26NUY92B***		—	—	—	—	—	—	**26NUY92N***	
—	400	800	800	8④	—	1200	400–1220	A1+CT	**26PUW92B***		—	—	—	—	—	—	**26PUW92N***	
—	450	900	900	8④	—	1600	400–1220	A1+CT	**26PUZ92B***		—	—	—	—	—	—	**26PUZ92N***	

Standard Width Enclosure with Ambient Compensated Bimetal Overload, 3-Phase, 3-Pole

½	½	1	1	0	—	3			**26CP92BA*81**		**26CP92WA*81**		**26CP92FA*81**		**26CP92HA*81**		**26CP92NA*81**	
1	1	3	3	0	—	10			**26CP92BB*81**		**26CP92WB*81**		**26CP92FB*81**		**26CP92HB*81**		**26CP92NB*81**	
3	3	5	5	0	—	25			**26CP92BC*81**		**26CP92WC*81**		**26CP92FC*81**		**26CP92HC*81**		**26CP92NC*81**	
½	½	1	1	1	—	3			**26DP92BA*81**		**26DP92WA*81**		**26DP92FA*81**		**26DP92HA*81**		**26DP92NA*81**	
1	1	3	3	1	—	10			**26DP92BB*81**		**26DP92WB*81**		**26DP92FB*81**		**26DP92HB*81**		**26DP92NB*81**	
3	3	7½	7½	1	—	25			**26DP92BD*81**		**26DP92WD*81**		**26DP92FD*81**		**26DP92HD*81**		**26DP92ND*81**	
7½	7½	10	10	1	—	30			**26DP92BE*81**		**26DP92WE*81**		**26DP92FE*81**		**26DP92HE*81**		**26DP92NE*81**	
—	—	15	15	—	1¾	40			**26EP92BF*81**		**26EP92WF*81**		**26EP92FF*81**		**26EP92HF*81**		**26EP92NF*81**	
10	10	—	—	—	1¾	50			**26EP92BG*81**		**26EP92WG*81**		**26EP92FG*81**		**26EP92HG*81**		**26EP92NG*81**	
—	—	20	20	2	—	40			**26FP92BH*81**		**26FP92WH*81**		**26FP92FH*81**		**26FP92HH*81**		**26FP92NH*81**	
10	15	25	25	2	—	50			**26FP92BJ*81**		**26FP92WJ*81**		**26FP92FJ*81**		**26FP92HJ*81**		**26FP92NJ*81**	
10	15	30	30	—	2½	50			**26GP92BK*81**		**26GP92WK*81**		**26GP92FK*81**		**26GP92HK*81**		**26GP92NK*81**	
15	20	—	—	—	2½	100			**26GP92BL*81**		**26GP92WL*81**		**26GP92FL*81**		**26GP92HL*81**		**26GP92NL*81**	
—	—	30	30	3	—	50			**26HP92BM*81**		**26HP92WM*81**		**26HP92FM*81**		**26HP92HM*81**		**26HP92NM*81**	
25	30	50	50	3	—	125			**26HP92BN*81**		**26HP92WN*81**		**26HP92FN*81**		**26HP92HN*81**		**26HP92NN*81**	
30	40	75	75	—	3½	125			**26IP92BP*81**		**26IP92WP*81**		**26IP92FP*81**		**26IP92HP*81**		**26IP92NP*81**	
40	50	100	100	4	—	150			**26JP92BR*81**		**26JP92WR*81**		**26JP92FR*81**		**26JP92HR*81**		**26JP92NR*81**	

Note: All starter sizes carry one maximum Hp rating (per the National Electric Code).

① Dual voltage coils not available in starter sizes 5–8.

② Enclosure is NEMA Type 4 (painted steel).

③ F coil 100-250V AC 50/60Hz, or DC, H coil 150-500V AC 50/60Hz, or DC

④ Only available F coil 100-250V AC 50/60Hz, or DC

Features and Benefits

Features

- Rugged Industrial Design
- Dual Voltage, Dual Frequency Coils
- Compact Design
- Snap-On Front Removable Auxiliary Contacts
- Electrical and Mechanical Interlocks
- Half Sizes — Space and Cost Savings
- Industrial Type Disconnect Operating Handle
- Visible Blade Disconnect Thru Size 4
- Adjustable Motor Circuit Protector
- 100,000 Amp Fault Protection with MCP or Class R Fuses
- Pilot Device Locations identified on All Enclosures
- UL Listed File #E14900
- CSA Certified File #LR6535

Applications

Multi-speed magnetic starters automatically reconnect multi-speed motor windings for the desired speed in response to a signal received from push button stations or other pilot devices.

These starters are available for two speed motors.

Consequent Pole multi-speed motors having two speeds on a single winding (consequent pole) require a starter which reconnects the motor leads to half the number of effective motor poles at the high speed point. In this type of motor, **the low speed is one half the high speed.**

Separate Windings motors having separate windings for each speed provide more varied speed combinations in that the low speed need not be one half the high speed. **Starters for separate winding motors consist of a starter unit for each speed.**

Multi-speed motor starters are available for constant torque, variable torque and constant horsepower motors.

Constant Torque motors maintain constant torque at all speeds. Horsepower varies directly with speed. This type of motor is applicable to conveyors, mills and similar applications.

Variable Torque motors produce a torque characteristic which varies as the square of the speed. This type of motor is applicable to fans, blowers and centrifugal pumps.

Constant Horsepower motors maintain constant horsepower at all speeds and therefore torque varies inversely with speed. This type of motor is applicable where the same horsepower is required at all speeds. **The higher current required at low speed requires derating on starters for constant horsepower applications.** This type of motor is applicable to metal working machines such as drills, lathes, mills, bending machines, punch presses, and power wrenches.

Operation

Magnetic starters for multi-speed applications select the desired speed in accordance with the pilot control.

The shock to machinery upon the reduction of speed is greater than when the speed is increased. Therefore, the pilot control should be wired so that the stop button must be depressed before dropping to a lower speed or time delays should be used for applications requiring full automatic operations. The multi-speed controls are available with the necessary interlocks or relays to provide this type of operation.

These controls may be modified for compelling or acceleration pilot control.

Selective Control permits the operator to start the motor at any speed and to change to a higher speed by merely pushing a button. To change to a lower speed it is necessary to first depress the stop button and to then press the proper speed button. Selective control is a function of the pilot control selected and requires no starter modifications.

Compelling Control requires that the motor always be started at the lower speed and that the push buttons be operated in speed sequence to go to the next higher speed. To change to a lower speed, the stop button must be depressed and then the push buttons operated in speed sequence until the desired speed is reached. Compelling control can be added from the factory modification section page 9/122.

Acceleration Control provides that the motor be accelerated automatically with timers by progressively energizing the controls from the push button station from the lowest to highest speed. To change to a lower speed the stop button is depressed and then it is necessary to proceed as if starting from rest. Acceleration control can be added from the factory modification section page 9/122.

Deceleration Control provides that the motor be decelerated automatically with a timer when going from high speed to low speed. The timer allows the motor to decelerate from high speed to a lower speed before automatically restarting the motor in low speed. Deceleration control can be added from the factory modification section page 9/122.

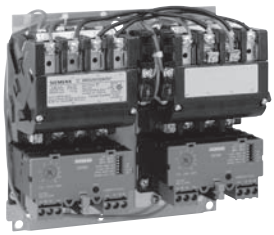

Open Style Two Speed Starter (ESP100 Overload)

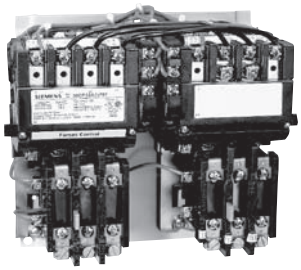

Open Style Two Speed Starter (Ambient Compensated Overload)

Constant or Variable Torque with Solid State Overload, Class 30

Selection

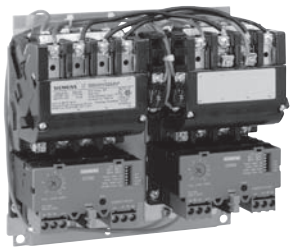

2S2W Starter
(ESP200 Overload)

Ordering Information

- Replace the (*) with a letter from the coil table. Dual voltage coils are wired on high voltage unless specified on order.
- Replace the (†) with the letter that corresponds to the correct low speed FLA in the FLA table.①
- Field Modification Kits see page 9/104.
- Factory Modifications see page 9/119.
- Dimensions see page 9/150.
- Wiring Diagrams see page 9/178.
- Replacement Parts see page 9/131.

Coil Table

60Hz Voltage	Letter
24	J
120	F
110–120/220–240	A
200–208	D
220–240	G
277	L
220–240/440–480	C
440–480	H
575–600	E

For other voltages and frequencies, see Factory Modifications page 9/119.

Low Speed FLA Table

Size	FLA	OLR Frame Size	†
0,1	0.25–1	A	A
0,1	0.75–3.4	A	B
0,1	3–12	A1	C
0,1	5.5–22	A1	D
0-1 3/4	10–40	A1	E
2-3	13–52	B	F
2-3	25–100	B	G
3 1/2-4	50–200	B	H

One Winding Consequent Pole, 3-Phase (Constant or Variable Torque)

Max Hp						Overload		Enclosure									
								Open Type Standard Auxiliary Contacts②		NEMA 1 General Purpose		NEMA 4/4X Stainless Watertight, Dust-tight, Corrosion Resistant 304 Stainless Steel		NEMA 4X Fiberglass Watertight, Dust-tight Corrosion Resistant		NEMA 12 NEMA 3/3R Industrial Use Weatherproof	
200 Volts	230 Volts	460 Volts	575 Volts	NEMA Size	Half Size	Amp Range	Frame Size	Catalog Number	List Price $	Catalog Number	List Price $	Catalog Number	List Price $	Catalog Number	List Price $	Catalog Number	List Price $
½	¾	1½	2	0	—	0.75–3.4	A	30CUB†32A2V*		30CUB†32B2V*		30CUB†32W2V*		30CUB†32F2V*		30CUB†3202V*	
2	2	5	5	0	—	3–12	A1	30CUC†32A2V*		30CUC†32B2V*		30CUC†32W2V*		30CUC†32F2V*		30CUC†3202V*	
3	3	—	—	0	—	5.5–22	A1	30CUD†32A2V*		30CUD†32B2V*		30CUD†32W2V*		30CUD†32F2V*		30CUD†3202V*	
½	¾	1½	1½	1	—	0.75–3.4	A	30DUB†32A2V*		30DUB†32B2V*		30DUB†32W2V*		30DUB†32F2V*		30DUB†3202V*	
2	2	5	5	1	—	3–12	A1	30DUC†32A2V*		30DUC†32B2V*		30DUC†32W2V*		30DUC†32F2V*		30DUC†3202V*	
3	3	10	10	1	—	5.5–22	A1	30DUD†32A2V*		30DUD†32B2V*		30DUD†32W2V*		30DUD†32F2V*		30DUD†3202V*	
7½	7½	—	—	1	—	10–40	A1	30DUE†32A2V*		30DUE†32B2V*		30DUE†32W2V*		30DUE†32F2V*		30DUE†3202V*	
10	10	15	15	—	1¾	10–40	A1	30EUE†32A2V*		30EUE†32B2V*		30EUE†32W2V*		30EUE†32F2V*		30EUE†3202V*	
10	15	25	25	2	—	13–52	B	30FUF†32A2V*		30FUF†32B2V*		30FUF†32W2V*		30FUF†32F2V*		30FUF†3202V*	
15	20	30	30	—	2½	25–100	B	30GUG†32A2V*		30GUG†32B2V*		30GUG†32W2V*		30GUG†32F2V*		30GUG†3202V*	
25	30	50	50	3	—	25–100	B	30HUG†32A2V*		30HUG†32B2V*		30HUG†32W2V*		30HUG†32F2V*		30HUG†3202V*	
30	40	75	75	—	3½	50–200	B	30IUH†32A2V*		30IUH†32B2V*		30IUH†32W2V*		30IUH†32F2V*		30IUH†3202V*	
40	50	100	100	4	—	50–200	B	30JUH†32A2V*		30JUH†32B2V*		30JUH†32W2V*		30JUH†32F2V*		30JUH†3202V*	

Two Separate Windings, 3-Phase (Constant or Variable Torque)

Max Hp						Overload		Enclosure									
								Open Type② Standard Auxiliary Contacts		NEMA 1 General Purpose		NEMA 4/4X Stainless Watertight, Dust-tight, Corrosion Resistant 304 Stainless Steel 316 Stainless Steel (Optional)		NEMA 4X Fiberglass Watertight, Dust-tight Corrosion Resistant		NEMA 12 NEMA 3/3R Industrial Use Weatherproof	
200 Volts	230 Volts	460 Volts	575 Volts	NEMA Size	Half Size	Amp Range	Frame Size	Catalog Number	List Price $	Catalog Number	List Price $	Catalog Number	List Price $	Catalog Number	List Price $	Catalog Number	List Price $
½	¾	1½	2	0	—	0.75–3.4	A	30CUB†32A1V*		30CUB†32B1V*		30CUB†32W1V*		30CUB†32F1V*		30CUB†3201V*	
2	2	5	5	0	—	3–12	A1	30CUC†32A1V*		30CUC†32B1V*		30CUC†32W1V*		30CUC†32F1V*		30CUC†3201V*	
3	3	—	—	0	—	5.5–22	A1	30CUD†32A1V*		30CUD†32B1V*		30CUD†32W1V*		30CUD†32F1V*		30CUD†3201V*	
½	¾	1½	1½	1	—	0.75–3.4	A	30DUB†32A1V*		30DUB†32B1V*		30DUB†32W1V*		30DUB†32F1V*		30DUB†3201V*	
2	2	5	5	1	—	3–12	A1	30DUC†32A1V*		30DUC†32B1V*		30DUC†32W1V*		30DUC†32F1V*		30DUC†3201V*	
3	3	10	10	1	—	5.5–22	A1	30DUD†32A1V*		30DUD†32B1V*		30DUD†32W1V*		30DUD†32F1V*		30DUD†3201V*	
7½	7½	—	—	1	—	10–40	A1	30DUE†32A1V*		30DUE†32B1V*		30DUE†32W1V*		30DUE†32F1V*		30DUE†3201V*	
10	10	15	15	—	1¾	10–40	A1	30EUE†32A1V*		30EUE†32B1V*		30EUE†32W1V*		30EUE†32F1V*		30EUE†3201V*	
10	15	25	25	2	—	13–52	B	30FUF†32A1V*		30FUF†32B1V*		30FUF†32W1V*		30FUF†32F1V*		30FUF†3201V*	
15	20	30	30	—	2½	25–100	B	30GUG†32A1V*		30GUG†32B1V*		30GUG†32W1V*		30GUG†32F1V*		30GUG†3201V*	
25	30	50	50	3	—	25–100	B	30HUG†32A1V*		30HUG†32B1V*		30HUG†32W1V*		30HUG†32F1V*		30HUG†3201V*	
30	40	75	75	—	3½	50–200	B	30IUH†32A1V*		30IUH†32B1V*		30IUH†32W1V*		30IUH†32F1V*		30IUH†3201V*	
40	50	100	100	4	—	50–200	B	30JUH†32A1V*		30JUH†32B1V*		30JUH†32W1V*		30JUH†32F1V*		30JUH†3201V*	

Note: All starter sizes carry one maximum Hp rating (per the National Electric Code).

① If motor FLA are unknown, select overload on the basis that low speed FLA will be no greater than 50% of high speed FLA.

② Auxiliary contacts 30C-30E 4th pole built-in 30F-30J 2 NO & 2 NC

Constant HP with Solid State Overload, Class 30

Selection

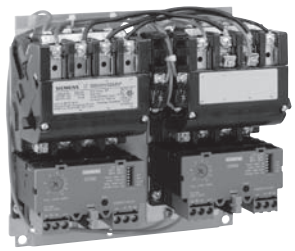

2S2W Starter
(ESP200 Overload)

Ordering Information

- Replace the (*) with a letter from the coil table. Dual voltage coils are wired on high voltage unless specified on order.
- Replace the (†) with the letter that corresponds to the correct FLA in High/Low Speed FLA Table.①
- Field Modification Kits see page 9/104.
- Factory Modifications see page 9/119.
- Dimensions see page 9/150.
- Wiring Diagrams see page 9/178.
- Replacement Parts see page 9/131.

Coil Table

60Hz Voltage	Letter
24	J
120	F
110–120/220–240	A
200–208	D
220–240	G
277	L
220–240/440–480	C
440–480	H
575–600	E

For other voltages and frequencies, see Factory Modifications page 9/119.

High/Low Speed FLA Table①

Size	FLA	OLR Frame Size	†
0,1	0.25–1	A	A
0,1	0.75–3.4	A	B
0,1	3–12	A1	C
0,1	5.5–22	A1	D
0-1 3/4	10–40	A1	E
2-3	13–52	B	F
2-3	25–100	B	G
3 1/2-4	50–200	B	H

* First (†) for high speed, second (†) for low speed. Use motor nameplate to select FLA. If motor FLA are unknown, select overload on the bases that the low speed FLA will be no greater than 50 % of high speed FLA.

One Winding Consequent Pole, 3-Phase (Constant Horsepower)

Max Hp						Enclosure									
						Open Type Standard Auxiliary Contacts②		NEMA 1 General Purpose		NEMA 4/4X Stainless Watertight, Dust-tight, Corrosion Resistant 304 Stainless Steel		NEMA 4X Fiberglass Watertight, Dust-tight Corrosion Resistant		NEMA 12 NEMA 3/3R Industrial Use Weatherproof	
200 Volts	230 Volts	460 Volts	575 Volts	NEMA Size	Half Size	Catalog Number	List Price $	Catalog Number	List Price $	Catalog Number	List Price $	Catalog Number	List Price $	Catalog Number	List Price $
2	2	3	3	0	—	30CU††32A2H*		30CU††32B2H*		30CU††32W2H*		30CU††32F2H*		30CU††3202H*	
5	5	7½	7½	1	—	30DU††32A2H*		30DU††32B2H*		30DU††32W2H*		30DU††32F2H*		30DU††3202H*	
7½	7½	10	10	—	1¾	30EU††32A2H*		30EU††32B2H*		30EU††32W2H*		30EU††32F2H*		30EU††3202H*	
7½	10	20	20	2	—	30FU††32A2H*		30FU††32B2H*		30FU††32W2H*		30FU††32F2H*		30FU††3202H*	
10	15	25	25	—	2½	30GU††32A2H*		30GU††32B2H*		30GU††32W2H*		30GU††32F2H*		30GU††3202H*	
20	25	40	40	3	—	30HU††32A2H*		30HU††32B2H*		30HU††32W2H*		30HU††32F2H*		30HU††3202H*	
25	30	50	50	—	3½	30IU††32A2H*		30IU††32B2H*		30IU††32W2H*		30IU††32F2H*		30IU††3202H*	
30	40	75	75	4	—	30JU††32A2H*		30JU††32B2H*		30JU††32W2H*		30JU††32F2H*		30JU††3202H*	

Two Separate Windings, 3-Phase (Constant Horsepower)

Max Hp						Enclosure									
						Open Type Standard Auxiliary Contacts②		NEMA 1 General Purpose		NEMA 4/4X Stainless Watertight, Dust-tight, Corrosion Resistant 304 Stainless Steel		NEMA 4X Fiberglass Watertight, Dust-tight Corrosion Resistant		NEMA 12 NEMA 3/3R Industrial Use Weatherproof	
200 Volts	230 Volts	460 Volts	575 Volts	NEMA Size	Half Size	Catalog Number	List Price $	Catalog Number	List Price $	Catalog Number	List Price $	Catalog Number	List Price $	Catalog Number	List Price $
2	2	3	3	0	—	30CU††32A1H*		30CU††32B1H*		30CU††32W1H*		30CU††32F1H*		30CU††3201H*	
5	5	7½	7½	1	—	30DU††32A1H*		30DU††32B1H*		30DU††32W1H*		30DU††32F1H*		30DU††3201H*	
7½	7½	10	10	—	13⁄4	30EU††32A1H*		30EU††32B1H*		30EU††32W1H*		30EU††32F1H*		30EU††3201H*	
7½	10	20	20	2	—	30FU††32A1H*		30FU††32B1H*		30FU††32W1H*		30FU††32F1H*		30FU††3201H*	
10	15	25	25	—	2½	30GU††32A1H*		30GU††32B1H*		30GU††32W1H*		30GU††32F1H*		30GU††3201H*	
20	25	40	40	3	—	30HU††32A1H*		30HU††32B1H*		30HU††32W1H*		30HU††32F1H*		30HU††3201H*	
25	30	50	50	—	3½	30IU††32A1H*		30IU††32B1H*		30IU††32W1H*		30IU††32F1H*		30IU††3201H*	
30	40	75	75	4	—	30JU††32A1H*		30JU††32B1H*		30JU††32W1H*		30JU††32F1H*		30JU††3201H*	

Note: All starter sizes carry one maximum Hp rating (per the National Electric Code).

① First (†) for high speed, second (†) for low speed. Use motor nameplate information to select FLA. If motor FLA are unknown, select overload on the basis that low speed FLA will be no greater than 50% of high speed FLA.

② Auxiliary contacts
30C-30E 4th pole built-in
30F-30J 2 NO & 2 NC

Constant or Variable Torque with Ambient Compensated Bimetal Overload, Class 30

Selection

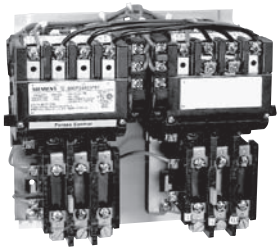

2S2W starter
(Amb. Comp. Bimetal OL)

Ordering Information

- Replace the (*) with a letter from the coil table. Dual voltage coils are wired on high voltage unless specified on order.
- Heater elements see page 9/124 (6 required)①
- Field Modification Kits see page 9/104.
- Factory Modifications see page 9/119.
- Dimensions see pages 9/143 open and 9/150 enclosed.
- Wiring Diagrams see page 9/178.
- Replacement Parts see page 9/131.
- For NO/NC SPDT contact on overload relay, replace "81" with "91". "81" indicates one NC contact.

Coil Table

60Hz Voltage	Letter
24	J
120	F
110–120/220–240	A
200–208	D
220–240	G
277	L
220–240/440–480	C
440–480	H
575–600	E

For other voltages and frequencies, see Factory Modifications page 9/119.

One Winding Consequent Pole, 3 Phase (Constant or Variable Torque)

Max Hp				Cont-actor Amp Rating	NEMA Size	Half Size	Enclosure									
							Open Type②		NEMA 1 General Purpose		NEMA 4/4X Stainless Watertight, Dust-tight Corrosion Resistant 304 Stainless Steel		NEMA 4X Fiberglass Watertight, Dust-tight Corrosion Resistant		NEMA 12 NEMA 3/3R Industrial Use Weatherproof	
200 Volts	230 Volts	460 Volts	575 Volts				Catalog Number	List Price $	Catalog Number	List Price $	Catalog Number	List Price $	Catalog Number	List Price $	Catalog Number	List Price $
3	3	5	5	18	0	—	30CP32A2V*81		30CP32B2V*81		30CP32W2V*81		30CP32F2V*81		30CP3202V*81	
7½	7½	10	10	27	1	—	30DP32A2V*81		30DP32B2V*81		30DP32W2V*81		30DP32F2V*81		30DP3202V*81	
10	10	15	15	40	—	1¾	30EP32A2V*81		30EP32B2V*81		30EP32W2V*81		30EP32F2V*81		30EP3202V*81	
10	15	25	25	45	2	—	30FP32A2V*81		30FP32B2V*81		30FP32W2V*81		30FP32F2V*81		30FP3202V*81	
15	20	30	30	60	—	2½	30GP32A2V*81		30GP32B2V*81		30GP32W2V*81		30GP32F2V*81		30GP3202V*81	
25	30	50	50	90	3	—	30HP32A2V*81		30HP32B2V*81		30HP32W2V*81		30HP32F2V*81		30HP3202V*81	
30	40	75	75	115	—	3½	30IP32A2V*81		30IP32B2V*81		30IP32W2V*81		30IP32F2V*81		30IP3202V*81	
40	50	100	100	135	4	—	30JG32A2V*81		30JG32B2V*81		30JG32W2V*81		30JG32F2V*81		30JG3202V*81	

Two Separate Windings, 3-Phase (Constant or Variable Torque)

Max Hp				Cont-actor Amp Rating	NEMA Size	Half Size	Enclosure									
							Open Type②		NEMA 1 General Purpose		NEMA 4/4X Stainless Watertight, Dust-tight Corrosion Resistant 304 Stainless Steel		NEMA 4X Fiberglass Watertight, Dust-tight Corrosion Resistant		NEMA 12 NEMA 3/3R Industrial Use Weatherproof	
200 Volts	230 Volts	460 Volts	575 Volts				Catalog Number	List Price $	Catalog Number	List Price $	Catalog Number	List Price $	Catalog Number	List Price $	Catalog Number	List Price $
3	3	5	5	18	0	—	30CP32A1V*81		30CP32B1V*81		30CP32W1V*81		30CP32F1V*81		30CP3201V*81	
7½	7½	10	10	27	1	—	30DP32A1V*81		30DP32B1V*81		30DP32W1V*81		30DP32F1V*81		30DP3201V*81	
10	10	15	15	40	—	1¾	30EP32A1V*81		30EP32B1V*81		30EP32W1V*81		30EP32F1V*81		30EP3201V*81	
10	15	25	25	45	2	—	30FP32A1V*81		30FP32B1V*81		30FP32W1V*81		30FP32F1V*81		30FP3201V*81	
15	20	30	30	60	—	2½	30GP32A1V*81		30GP32B1V*81		30GP32W1V*81		30GP32F1V*81		30GP3201V*81	
25	30	50	50	90	3	—	30HP32A1V*81		30HP32B1V*81		30HP32W1V*81		30HP32F1V*81		30HP3201V*81	
30	40	75	75	115	—	3½	30IP32A1V*81		30IP32B1V*81		30IP32W1V*81		30IP32F1V*81		30IP3201V*81	
40	50	100	100	135	4	—	30JG32A1V*81		30JG32B1V*81		30JG32W1V*81		30JG32F1V*81		30JG3201V*81	

Note: Hp's shown above are based on the overload amp range for the FLA's (per the National Electric Code) of typical industrial motors. All starter sizes carry one maximum Hp rating.

① If motor FLA are unknown, select heater elements on the basis that low speed FLA will be no greater than 50% of high speed FLA.

② Auxiliary contacts
30C-30E 4th pole built-in
30F-30J 2 NO & 2 NC

Constant HP with Ambient Compensated Bimetal Overload, Class 30

Selection

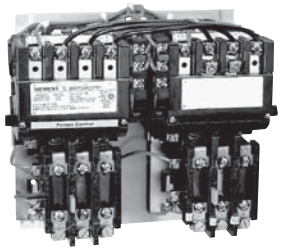

2S2W starter
(Amb. Comp. Bimetal OL)

Ordering Information

- Replace the (*) with a letter from the coil table. Dual voltage coils are wired on high voltage unless specified on order.
- Heater elements see page 9/124 (6 required)①.
- Field Modification Kits see page 9/104.
- Factory Modifications see page 9/119.
- Dimensions see pages 9/143 open and 9/150 enclosed.
- Wiring Diagrams see page 9/178.
- Replacement Parts see page 9/131.
- For NO/NC SPDT contact on overload relay, replace "81" with "91". "81" indicates one NC contact.

Coil Table

60Hz Voltage	Letter
24	J
120	F
110–120/220–240	A
200–208	D
220–240	G
277	L
220–240/440–480	C
440–480	H
575–600	E

For other voltages and frequencies, see Factory Modifications page 9/119.

One Winding Consequent Pole, 3-Phase (Constant Horsepower)

Max Hp							Enclosure									
							Open Type②		NEMA 1 General Purpose		NEMA 4/4X Stainless Watertight, Dust-tight Corrosion Resistant 304 Stainless Steel		NEMA 4X Fiberglass Watertight, Dust-tight Corrosion Resistant		NEMA 12 NEMA 3/3R Industrial Use Weatherproof	
200 Volts	230 Volts	460 Volts	575 Volts	Cont-actor Amp Rating	NEMA Size	Half Size	Catalog Number	List Price $	Catalog Number	List Price $	Catalog Number	List Price $	Catalog Number	List Price $	Catalog Number	List Price $
2	2	3	3	18	0	—	30CP32A2H*81		30CP32B2H*81		30CP32W2H*81		30CP32F2H*81		30CP3202H*81	
5	5	7½	7½	27	1	—	30DP32A2H*81		30DP32B2H*81		30DP32W2H*81		30DP32F2H*81		30DP3202H*81	
7½	7½	10	10	40	—	1¾	30EP32A2H*81		30EP32B2H*81		30EP32W2H*81		30EP32F2H*81		30EP3202H*81	
7½	10	20	20	45	2	—	30FP32A2H*81		30FP32B2H*81		30FP32W2H*81		30FP32F2H*81		30FP3202H*81	
10	15	25	25	60	—	2½	30GP32A2H*81		30GP32B2H*81		30GP32W2H*81		30GP32F2H*81		30GP3202H*81	
20	25	40	40	90	3	—	30HP32A2H*81		30HP32B2H*81		30HP32W2H*81		30HP32F2H*81		30HP3202H*81	
25	30	50	50	115	—	3½	30IP32A2H*81		30IP32B2H*81		30IP32W2H*81		30IP32F2H*81		30IP3202H*81	
30	40	75	75	135	4	—	30JG32A2H*81		30JG32B2H*81		30JG32W2H*81		30JG32F2H*81		30JG3202H*81	

Two Separate Windings, 3-Phase (Constant Horsepower)

Max Hp							Enclosure									
							Open Type②		NEMA 1 General Purpose		NEMA 4/4X Stainless Watertight, Dust-tight Corrosion Resistant 304 Stainless Steel		NEMA 4X Fiberglass Watertight, Dust-tight Corrosion Resistant		NEMA 12 NEMA 3/3R Industrial Use Weatherproof	
200 Volts	230 Volts	460 Volts	575 Volts	Cont-actor Amp Rating	NEMA Size	Half Size	Catalog Number	List Price $	Catalog Number	List Price $	Catalog Number	List Price $	Catalog Number	List Price $	Catalog Number	List Price $
2	2	3	3	18	0	—	30CP32A1H*81		30CP32B1H*81		30CP32W1H*81		30CP32F1H*81		30CP3201H*81	
5	5	7½	7½	27	1	—	30DP32A1H*81		30DP32B1H*81		30DP32W1H*81		30DP32F1H*81		30DP3201H*81	
7½	7½	10	10	40	—	1¾	30EP32A1H*81		30EP32B1H*81		30EP32W1H*81		30EP32F1H*81		30EP3201H*81	
7½	10	20	20	45	2	—	30FP32A1H*81		30FP32B1H*81		30FP32W1H*81		30FP32F1H*81		30FP3201H*81	
10	15	25	25	60	—	2½	30GP32A1H*81		30GP32B1H*81		30GP32W1H*81		30GP32F1H*81		30GP3201H*81	
20	25	40	40	90	3	—	30HP32A1H*81		30HP32B1H*81		30HP32W1H*81		30HP32F1H*81		30HP3201H*81	
25	30	50	50	115	—	3½	30IP32A1H*81		30IP32B1H*81		30IP32W1H*81		30IP32F1H*81		30IP3201H*81	
30	40	75	75	135	4	—	30JG32A1H*81		30JG32B1H*81		30JG32W1H*81		30JG32F1H*81		30JG3201H*81	

Note: Hp's shown above are based on the overload amp range for the FLA's (per the National Electric Code) of typical industrial motors. All starter sizes carry one maximum Hp rating.

① If motor FLA are unknown, select heater element on the basis that low speed FLA will be no greater than 50% of high speed FLA.

② Auxiliary contacts
30C-30E 4th pole built-in
30F-30J 2 NO & 2 NC

Non-Fusible, Constant or Variable Torque with Solid State Overload, Class 32

Selection

Ordering Information

- Replace the (*) with a letter from the coil table. Dual voltage coils are wired on high voltage unless specified on order.
- Replace the (†) with the letter that corresponds to the correct low speed FLA in the FLA table.②
- Fuse clips see page 9/120.
- Field Modification Kits see page 9/104.
- Factory Modifications see page 9/119.
- Dimensions see page 9/166.
- Wiring Diagrams see page 9/178.
- Replacement Parts see page 9/131.

Coil Table

60Hz Voltage	Letter
24	J
120	F
110–120/220–240①	A
200–208	D
220–240	G
277	L
220–240/440–480①	C
440–480	H
575–600	E

For other voltages and frequencies, see Factory Modifications page 9/119.

Low Speed FLA Table

Size	FLA	OLR Frame Size	†
0,1	0.25–1	A	A
0,1	0.75–3.4	A	B
0,1	3–12	A1	C
0,1	5.5–22	A1	D
0-1 3/4	10–40	A1	E
2-3	13–52	B	F
2-3	25–100	B	G
3 1/2-4	50–200	B	H

One Winding Consequent Pole, 3-Phase (Constant or Variable Torque)

Max Hp						Overload			Enclosure							
									NEMA 1 General Purpose		NEMA 4/4X Stainless Watertight, Dust-tight, Corrosion Resistant 304 Stainless Steel		NEMA 4X Fiberglass Watertight, Dust-tight Corrosion Resistant		NEMA 12, NEMA 3/3R, NEMA 4 Painted Industrial Use Weatherproof Watertight, Dust-tight	
200 Volts	230 Volts	460 Volts	575 Volts	NEMA Size	Half Size	Amp Range	Frame Size	Disc. Amp Range	Catalog Number	List Price $	Catalog Number	List Price $	Catalog Number	List Price $	Catalog Number	List Price $
½	¾	1½	2	0	—	0.75–3.4	A	30	32CUB†92B2V2*		32CUB†92W2V2*		32CUB†92F2V2*		32CUB†92N2V2*	
2	2	5	5	0	—	3–12	A1	30	32CUC†92B2V2*		32CUC†92W2V2*		32CUC†92F2V2*		32CUC†92N2V2*	
3	3	—	—	0	—	5.5–22	A1	30	32CUD†92B2V2*		32CUD†92W2V2*		32CUD†92F2V2*		32CUD†92N2V2*	
½	¾	1½	1½	1	—	0.75–3.4	A	30	32DUB†92B2V2*		32DUB†92W2V2*		32DUB†92F2V2*		32DUB†92N2V2*	
2	2	5	5	1	—	3–12	A1	30	32DUC†92B2V2*		32DUC†92W2V2*		32DUC†92F2V2*		32DUC†92N2V2*	
3	3	10	10	1	—	5.5–22	A1	30	32DUD†92B2V2*		32DUD†92W2V2*		32DUD†92F2V2*		32DUD†92N2V2*	
7½	7½	—	—	1	—	10–40	A1	60	32DUE†92B2V2*		32DUE†92W2V2*		32DUE†92F2V2*		32DUE†92N2V2*	
10	10	15	15	—	1¾	10–40	A1	60	32EUE†92B2V2*		32EUE†92W2V2*		32EUE†92F2V2*		32EUE†92N2V2*	
10	15	25	25	2	—	13–52	B	60	32FUF†92B2V2*		32FUF†92W2V2*		32FUF†92F2V2*		32FUF†92N2V2*	
15	20	30	30	—	2½	25–100	B	100	32GUG†92B2V2*		32GUG†92W2V2*		32GUG†92F2V2*		32GUG†92N2V2*	
20	25	50	50	3	—	25–100	B	100	32HUG†92B2V2*		32HUG†92W2V2*		32HUG†92F2V2*		32HUG†92N2V2*	
30	40	75	75	—	3½	50–200	B	200	32IUH†92B2V2*		32IUH†92W2V2*		32IUH†92F2V2*		32IUH†92N2V2*	
40	50	100	100	4	—	50–200	B	200	32JUH†92B2V2*		32JUH†92W2V2*		32JUH†92F2V2*		32JUH†92N2V2*	

Two Separate Windings, 3-Phase (Constant or Variable Torque)

Max Hp						Overload			Enclosure							
									NEMA 1 General Purpose		NEMA 4/4X Stainless Watertight, Dust-tight, Corrosion Resistant 304 Stainless Steel		NEMA 4X Fiberglass Watertight, Dust-tight Corrosion Resistant		NEMA 12, NEMA 3/3R, NEMA 4 Painted Industrial Use Weatherproof Watertight, Dust-tight	
200 Volts	230 Volts	460 Volts	575 Volts	NEMA Size	Half Size	Amp Range	Frame Size	Disc. Amp Range	Catalog Number	List Price $	Catalog Number	List Price $	Catalog Number	List Price $	Catalog Number	List Price $
½	¾	1½	2	0	—	0.75–3.4	A	30	32CUB†92B1V2*		32CUB†92W1V2*		32CUB†92F1V2*		32CUB†92N1V2*	
2	2	5	5	0	—	3–12	A1	30	32CUC†92B1V2*		32CUC†92W1V2*		32CUC†92F1V2*		32CUC†92N1V2*	
3	3	—	—	0	—	5.5–22	A1	30	32CUD†92B1V2*		32CUD†92W1V2*		32CUD†92F1V2*		32CUD†92N1V2*	
½	¾	1½	1½	1	—	0.75–3.4	A	30	32DUB†92B1V2*		32DUB†92W1V2*		32DUB†92F1V2*		32DUB†92N1V2*	
2	2	5	5	1	—	3–12	A1	30	32DUC†92B1V2*		32DUC†92W1V2*		32DUC†92F1V2*		32DUC†92N1V2*	
3	3	10	10	1	—	5.5–22	A1	30	32DUD†92B1V2*		32DUD†92W1V2*		32DUD†92F1V2*		32DUD†92N1V2*	
7½	7½	—	—	1	—	10–40	A1	60	32DUE†92B1V2*		32DUE†92W1V2*		32DUE†92F1V2*		32DUE†92N1V2*	
10	10	15	15	—	1¾	10–40	A1	60	32EUE†92B1V2*		32EUE†92W1V2*		32EUE†92F1V2*		32EUE†92N1V2*	
10	15	25	25	2	—	13–52	B	60	32FUF†92B1V2*		32FUF†92W1V2*		32FUF†92F1V2*		32FUF†92N1V2*	
15	20	30	30	—	2½	25–100	B	100	32GUG†92B1V2*		32GUG†92W1V2*		32GUG†92F1V2*		32GUG†92N1V2*	
20	25	50	50	3	—	25–100	B	100	32HUG†92B1V2*		32HUG†92W1V2*		32HUG†92F1V2*		32HUG†92N1V2*	
30	40	75	75	—	3½	50–200	B	200	32IUH†92B1V2*		32IUH†92W1V2*		32IUH†92F1V2*		32IUH†92N1V2*	
40	50	100	100	4	—	50–200	B	200	32JUH†92B1V2*		32JUH†92W1V2*		32JUH†92F1V2*		32JUH†92N1V2*	

Note: All starter sizes carry one maximum Hp rating (per the National Electric Code).

① Dual voltage coils not available in modified starters.

② If motor FLA are unknown, select overload on the basis that low speed FLA will be no greater than 50% of high speed FLA.

Non-Fusible, Constant Horsepower with Solid State Overload, Class 32

Selection

Ordering Information

- Replace the (*) with a letter from the coil table. Dual voltage coils are wired on high voltage unless specified on order.
- Replace the (†) with the letter that corresponds to the correct FLA in the High/Low Speed FLA Table.②
- Fuse clips see page 9/120.
- Field Modification Kits see page 9/104.
- Factory Modifications see page 9/119.
- Dimensions see page 9/166.
- Wiring Diagrams see page 9/178.
- Replacement Parts see page 9/131.

Coil Table

60Hz Voltage	Letter
24	J
120	F
110–120/220–240①	A
200–208	D
220–240	G
277	L
220–240/440–480①	C
440–480	H
575–600	E

For other voltages and frequencies see Factory Modifications page 9/119.

High/Low Speed FLA Table②

Size	FLA	OLR Frame Size	†
0,1	0.25–1	A	A
0,1	0.75–3.4	A	B
0,1	3–12	A1	C
0,1	5.5–22	A1	D
0-1 3/4	10–40	A1	E
2-3	13–52	B	F
2-3	25–100	B	G
3 1/2-4	50–200	B	H

* First (†) for high speed, second (†) for low speed. Use motor nameplate to select FLA. If motor FLA are unknown, select overload on the bases that the low speed FLA will be no greater than 50 % of high speed FLA.

One Winding Consequent Pole, 3-Phase (Constant Horsepower)

Max Hp						Overload			Enclosure							
									NEMA 1 General Purpose		NEMA 4/4X Stainless Watertight, Dust-tight, Corrosion Resistant 304 Stainless Steel		NEMA 4X Fiberglass Watertight, Dust-tight Corrosion Resistant		NEMA 12, NEMA 3/3R, NEMA 4 Painted Industrial Use Weatherproof Watertight, Dust-tight	
200 Volts	230 Volts	460 Volts	575 Volts	NEMA Size	Half Size	Amp Range	Frame Size	Disc. Amp Range	Catalog Number	List Price $	Catalog Number	List Price $	Catalog Number	List Price $	Catalog Number	List Price $
2	2	3	3	0	—	—	—	30	32CU††92B2H2*		32CU††92W2H2*	4054.00	32CU††92F2H2*		32CU††92N2H2*	
5	5	7½	7½	1	—	—	—	30	32DU††92B2H2*		32DU††92W2H2*	4173.00	32DU††92F2H2*		32DU††92N2H2*	
7½	7½	10	10	—	1¾	—	—	60	32EU††92B2H2*		32EU††92W2H2*	4873.00	32EU††92F2H2*		32EU††92N2H2*	
7½	10	20	20	2	—	—	—	60	32FU††92B2H2*		32FU††92W2H2*	6146.00	32FU††92F2H2*		32FU††92N2H2*	
10	15	25	25	—	2½	—	—	100	32GU††92B2H2*		32GU††92W2H2*	7219.00	32GU††92F2H2*		32GU††92N2H2*	
20	25	40	40	3	—	—	—	100	32HU††92B2H2*		32HU††92W2H2*	9321.00	32HU††92F2H2*		32HU††92N2H2*	
25	30	50	50	—	3½	—	—	200	32IU††92B2H2*		32IU††92W2H2*	18079.00	32IU††92F2H2*		32IU††92N2H2*	
30	40	75	75	4	—	—	—	200	32JU††92B2H2*		32JU††92W2H2*	19263.00	32JU††92F2H2*		32JU††92N2H2*	

Two Separate Windings, 3-Phase (Constant Horsepower)

Max Hp						Overload			Enclosure							
									NEMA 1 General Purpose		NEMA 4/4X Stainless Watertight, Dust-tight, Corrosion Resistant 304 Stainless Steel		NEMA 4X Fiberglass Watertight, Dust-tight Corrosion Resistant		NEMA 12, NEMA 3/3R, NEMA 4 Painted Industrial Use Weatherproof Watertight, Dust-tight	
200 Volts	230 Volts	460 Volts	575 Volts	NEMA Size	Half Size	Amp Range	Frame Size	Disc. Amp Range	Catalog Number	List Price $	Catalog Number	List Price $	Catalog Number	List Price $	Catalog Number	List Price $
2	2	3	3	0	—	—	—	30	32CU††92B1H2*		32CU††92W1H2*		32CU††92F1H2*		32CU††92N1H2*	
5	5	7½	7½	1	—	—	—	30	32DU††92B1H2*		32DU††92W1H2*		32DU††92F1H2*		32DU††92N1H2*	
7½	7½	10	10	—	1¾	—	—	60	32EU††92B1H2*		32EU††92W1H2*		32EU††92F1H2*		32EU††92N1H2*	
7½	10	20	20	2	—	—	—	60	32FU††92B1H2*		32FU††92W1H2*		32FU††92F1H2*		32FU††92N1H2*	
10	15	25	25	—	2½	—	—	100	32GU††92B1H2*		32GU††92W1H2*		32GU††92F1H2*		32GU††92N1H2*	
20	25	40	40	3	—	—	—	100	32HU††92B1H2*		32HU††92W1H2*		32HU††92F1H2*		32HU††92N1H2*	
25	30	50	50	—	3½	—	—	200	32IU††92B1H2*		32IU††92W1H2*		32IU††92F1H2*		32IU††92N1H2*	
30	40	75	75	4	—	—	—	200	32JU††92B1H2*		32JU††92W1H2*		32JU††92F1H2*		32JU††92N1H2*	

Note: All starter sizes carry one maximum Hp rating (per the National Electric Code).

① Dual voltage coils not available in modified starters.

② First † for high speed, second † for low speed. Use motor nameplate information to select FLA. If motor FLA are unknown, select overload on the basis that low speed FLA will be no greater than 50% of high speed FLA.

Non-Fusible, Constant or Variable Torque with Ambient Compensated Bimetal Overload, Class 32

Selection

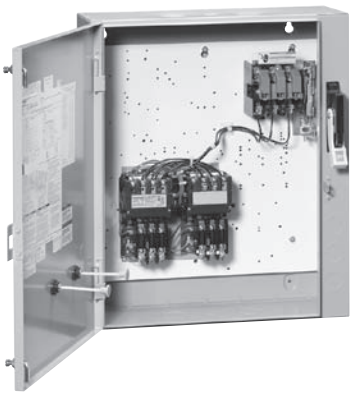

Ordering Information

- Replace the (*) with a letter from the coil table. Dual voltage coils are wired on high voltage unless specified on order.
- Heater elements see page 9/124. (6 required)
- Fuse clips see page 9/120.
- Field Modification Kits see page 9/104.
- Factory Modifications see page 9/119.
- Dimensions see page 9/166.
- Wiring Diagrams see page 9/178.
- Replacement Parts see page 9/131.
- For NO/NC SPDT contact on overload relay, replace "81" with "91"."81" indicates one NC contact.

Coil Table

60Hz Voltage	Letter
24	J
120	F
110–120/220–240①	A
200–208	D
220–240	G
277	L
220–240/440–480①	C
440–480	H
575–600	E

For other voltages and frequencies, see Factory Modifications page 9/119.

One Winding Consequent Pole, 3-Phase (Constant or Variable Torque)

Max Hp							Enclosure							
							NEMA 1 General Purpose		NEMA 4/4X Stainless Watertight, Dust-tight Corrosion Resistant 304 Stainless Steel		NEMA 4X Fiberglass Watertight, Dust-tight Corrosion Resistant		NEMA 12, NEMA 3/3R NEMA 4 Painted Industrial Use Weatherproof Watertight, Dust-tight	
200 Volts	230 Volts	460 Volts	575 Volts	NEMA Size	Disc Half Size	Amp Rating	Catalog Number	List Price $	Catalog Number	List Price $	Catalog Number	List Price $	Catalog Number	List Price $
3	3	5	5	0	—	30	32CP92B2V2*81		32CP92W2V2*81		32CP92F2V2*81		32CP92N2V2*81	
7½	7½	10	10	1	—	30	32DP92B2V2*81		32DP92W2V2*81		32DP92F2V2*81		32DP92N2V2*81	
10	10	15	15	—	1¾	60	32EP92B2V2*81		32EP92W2V2*81		32EP92F2V2*81		32EP92N2V2*81	
10	15	25	25	2	—	60	32FP92B2V2*81		32FP92W2V2*81		32FP92F2V2*81		32FP92N2V2*81	
15	20	30	30	—	2½	100	32GP92B2V2*81		32GP92W2V2*81		32GP92F2V2*81		32GP92N2V2*81	
20	25	50	50	3	—	100	32HP92B2V2*81		32HP92W2V2*81		32HP92F2V2*81		32HP92N2V2*81	
30	40	75	75	—	3½	200	32IP92B2V2*81		32IP92W2V2*81		32IP92F2V2*81		32IP92N2V2*81	
40	50	100	100	4	—	200	32JP92B2V2*81		32JP92W2V2*81		32JP92F2V2*81		32JP92N2V2*81	

Two Separate Windings, 3-Phase (Constant or Variable Torque)

Max Hp							Enclosure							
							NEMA 1 General Purpose		NEMA 4/4X Stainless Watertight, Dust-tight Corrosion Resistant 304 Stainless Steel		NEMA 4X Fiberglass Watertight, Dust-tight Corrosion Resistant		NEMA 12, NEMA 3/3R NEMA 4 Painted Industrial Use Weatherproof Watertight, Dust-tight	
200 Volts	230 Volts	460 Volts	575 Volts	NEMA Size	Disc Half Size	Amp Rating	Catalog Number	List Price $	Catalog Number	List Price $	Catalog Number	List Price $	Catalog Number	List Price $
3	3	5	5	0	—	30	32CP92B1V2*81		32CP92W1V2*81		32CP92F1V2*81		32CP92N1V2*81	
7½	7½	10	10	1	—	30	32DP92B1V2*81		32DP92W1V2*81		32DP92F1V2*81		32DP92N1V2*81	
10	10	15	15	—	1¾	60	32EP92B1V2*81		32EP92W1V2*81		32EP92F1V2*81		32EP92N1V2*81	
10	15	25	25	2	—	60	32FP92B1V2*81		32FP92W1V2*81		32FP92F1V2*81		32FP92N1V2*81	
15	20	30	30	—	2½	100	32GP92B1V2*81		32GP92W1V2*81		32GP92F1V2*81		32GP92N1V2*81	
20	25	50	50	3	—	100	32HP92B1V2*81		32HP92W1V2*81		32HP92F1V2*81		32HP92N1V2*81	
30	40	75	75	—	3½	200	32IP92B1V2*81		32IP92W1V2*81		32IP92F1V2*81		32IP92N1V2*81	
40	50	100	100	4	—	200	32JP92B1V2*81		32JP92W1V2*81		32JP92F1V2*81		32JP92N1V2*81	

Note: Hp's shown above are based on the overload amp range for the FLA's (per the National Electric Code) of typical industrial motors. All starter sizes carry one maximum Hp rating.

① Dual voltage coils not available in modified starters.

Non-Fusible, Constant Horsepower with Ambient Compensated Bimetal Overload, Class 32

Selection

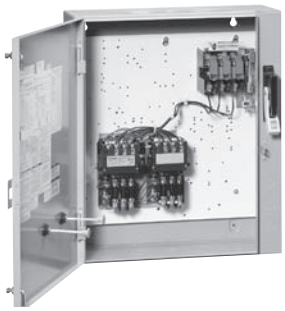

Ordering Information

- Replace the (*) with a letter from the coil table. Dual voltage coils are wired on high voltage unless specified on order.
- Heater elements see page 9/124. (6 Required)
- Fuse clips see page 9/120.
- Field Modification Kits see page 9/104.
- Factory Modifications see page 9/119.
- Dimensions see page 9/166.
- Wiring Diagrams see page 9/178.
- Replacement Parts see page 9/131.
- For NO/NC SPDT contact on overload relay, replace "81" with "91". "81" indicates one NC contact..

Coil Table

60Hz Voltage	Letter
24	J
120	F
110–120/220–240①	A
200–208	D
220–240	G
277	L
220–240/440–480①	C
440–480	H
575–600	E

For other voltages and frequencies, see Factory Modifications page 9/119.

One Winding Consequent Pole, 3-Phase (Constant Horsepower)

Max Hp							Enclosure							
							NEMA 1 General Purpose		NEMA 4/4X Stainless Watertight, Dust-tight Corrosion Resistant 304 Stainless Steel		NEMA 4X Fiberglass Watertight, Dust-tight Corrosion Resistant		NEMA 12, NEMA 3/3R NEMA 4 Painted Industrial Use Weatherproof Watertight, Dust-tight	
200 Volts	230 Volts	460 Volts	575 Volts	NEMA Size	Disc Half Size	Amp Rating	Catalog Number	List Price $	Catalog Number	List Price $	Catalog Number	List Price $	Catalog Number	List Price $
2	2	3	3	0	—	30	32CP92B2H2*81		32CP92W2H2*81		32CP92F2H2*81		32CP92N2H2*81	
5	5	7½	7½	1	—	30	32DP92B2H2*81		32DP92W2H2*81		32DP92F2H2*81		32DP92N2H2*81	
7½	7½	10	10	—	1¾	60	32EP92B2H2*81		32EP92W2H2*81		32EP92F2H2*81		32EP92N2H2*81	
7½	10	20	20	2	—	60	32FP92B2H2*81		32FP92W2H2*81		32FP92F2H2*81		32FP92N2H2*81	
10	15	25	25	—	2½	100	32GP92B2H2*81		32GP92W2H2*81		32GP92F2H2*81		32GP92N2H2*81	
20	25	40	40	3	—	100	32HP92B2H2*81		32HP92W2H2*81		32HP92F2H2*81		32HP92N2H2*81	
25	30	50	50	—	3½	200	32IP92B2H2*81		32IP92W2H2*81		32IP92F2H2*81		32IP92N2H2*81	
30	40	75	75	4	—	200	32JP92B2H2*81		32JP92W2H2*81		32JP92F2H2*81		32JP92N2H2*81	

Two Separate Windings, 3-Phase (Constant Horsepower)

Max Hp							Enclosure							
							NEMA 1 General Purpose		NEMA 4/4X Stainless Watertight, Dust-tight Corrosion Resistant 304 Stainless Steel		NEMA 4X Fiberglass Watertight, Dust-tight Corrosion Resistant		NEMA 12, NEMA 3/3R NEMA 4 Painted Industrial Use Weatherproof Watertight, Dust-tight	
200 Volts	230 Volts	460 Volts	575 Volts	NEMA Size	Half Size	Disc Amp Rating	Catalog Number	List Price $	Catalog Number	List Price $	Catalog Number	List Price $	Catalog Number	List Price $
2	2	3	3	0	—	30	32CP92B1H2*81		32CP92W1H2*81		32CP92F1H2*81		32CP92N1H2*81	
5	5	7½	7½	1	—	30	32DP92B1H2*81		32DP92W1H2*81		32DP92F1H2*81		32DP92N1H2*81	
7½	7½	10	10	—	1¾	60	32EP92B1H2*81		32EP92W1H2*81		32EP92F1H2*81		32EP92N1H2*81	
7½	10	20	20	2	—	60	32FP92B1H2*81		32FP92W1H2*81		32FP92F1H2*81		32FP92N1H2*81	
10	15	25	25	—	2½	100	32GP92B1H2*81		32GP92W1H2*81		32GP92F1H2*81		32GP92N1H2*81	
20	25	40	40	3	—	100	32HP92B1H2*81		32HP92W1H2*81		32HP92F1H2*81		32HP92N1H2*81	
25	30	50	50	—	3½	200	32IP92B1H2*81		32IP92W1H2*81		32IP92F1H2*81		32IP92N1H2*81	
30	40	75	75	4	—	200	32JP92B1H2*81		32JP92W1H2*81		32JP92F1H2*81		32JP92N1H2*81	

Note: Hp's shown above are based on the overload amp range for the FLA's (per the National Electric Code) of typical industrial motors. All starter sizes carry one maximum Hp rating.

① Dual voltage coils not available in modified starters.

MCP Type, Constant or Variable Torque with Solid State Overload, Class 32

Selection

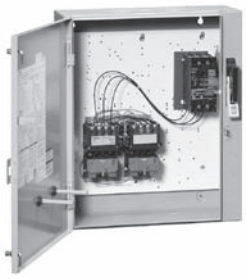

Ordering Information

- Replace the (*) with a letter from the coil table. Dual voltage coils are wired on high voltage unless specified on order.
- Replace the (†) with the letter that corresponds to the correct low speed FLA in the FLA table.②
- Field Modification Kits see page 9/104.
- Factory Modifications see page 9/119.
- Dimensions see page 9/166.
- Wiring Diagrams see page 9/178.
- Replacement Parts see page 9/131.

Coil Table

60Hz Voltage	Letter
24	J
120	F
110–120/220–240①	A
200–208	D
220–240	G
277	L
220–240/440–480①	C
440–480	H
575–600	E

For other voltages and frequencies, see Factory Modifications page 9/119.

Low Speed FLA Table

Size	FLA	OLR Frame Size	†
0,1	0.25–1	A	A
0,1	0.75–3.4	A	B
0,1	3–12	A1	C
0,1	5.5–22	A1	D
0-1 3/4	10–40	A1	E
2-3	13–52	B	F
2-3	25–100	B	G
3 1/2-4	50–200	B	H

One Winding Consequent Pole, 3-Phase (Constant or Variable Torque)

Max Hp							Overload		Enclosure							
									NEMA 1 General Purpose		NEMA 4/4X Stainless Watertight, Dust-tight, Corrosion Resistant 304 Stainless Steel		NEMA 4X Fiberglass Watertight, Dust-tight Corrosion Resistant		NEMA 12, NEMA 3/3R, NEMA 4 Painted Industrial Use Weatherproof Watertight, Dust-tight	
200 Volts	230 Volts	460 Volts	575 Volts	NEMA Size	Half Size	Motor Circuit Interruter ETI Amps	Amp Range	Frame Size	Catalog Number	List Price $	Catalog Number	List Price $	Catalog Number	List Price $	Catalog Number	List Price $
½	¾	1½	2	0	—	3	0.75–3.4	A	**32CUB†92B2V***		**32CUB†92W2V***		**32CUB†92F2V***		**32CUB†92N2V***	
2	2	5	5	0	—	10	3–12	A1	**32CUC†92B2V***		**32CUC†92W2V***		**32CUC†92F2V***		**32CUC†92N2V***	
3	3	—	—	0	—	25	5.5–22	A1	**32CUD†92B2V***		**32CUD†92W2V***		**32CUD†92F2V***		**32CUD†92N2V***	
½	¾	1½	1½	1	—	3	0.75–3.4	A	**32DUB†92B2V***		**32DUB†92W2V***		**32DUB†92F2V***		**32DUB†92N2V***	
2	2	5	5	1	—	10	3–12	A1	**32DUC†92B2V***		**32DUC†92W2V***		**32DUC†92F2V***		**32DUC†92N2V***	
3	3	10	10	1	—	25	5.5–22	A1	**32DUD†92B2V***		**32DUD†92W2V***		**32DUD†92F2V***		**32DUD†92N2V***	
7½	7½	—	—	1	—	30	10–40	A1	**32DUE†92B2V***		**32DUE†92W2V***		**32DUE†92F2V***		**32DUE†92N2V***	
—	—	15	15	—	1¾	40	10–40	A1	**32EUE†92B2V***		**32EUE†92W2V***		**32EUE†92F2V***		**32EUE†92N2V***	
10	15	25	25	2	—	50	13–52	B	**32FUF†92B2V***		**32FUF†92W2V***		**32FUF†92F2V***		**32FUF†92N2V***	
15	20	30	30	—	2½	100	25–100	B	**32GUG†92B2V***		**32GUG†92W2V***		**32GUG†92F2V***		**32GUG†92N2V***	
25	30	50	50	3	—	125	25–100	B	**32HUG†92B2V***		**32HUG†92W2V***		**32HUG†92F2V***		**32HUG†92N2V***	
30	40	75	75	—	3½	125	50–200	B	**32IUH†92B2V***		**32IUH†92W2V***		**32IUH†92F2V***		**32IUH†92N2V***	
40	50	100	100	4	—	150	50–200	B	**32JUH†92B2V***		**32JUH†92W2V***		**32JUH†92F2V***		**32JUH†92N2V***	

Two Separate Windings, 3-Phase (Constant or Variable Torque)

Max Hp							Overload		Enclosure							
									NEMA 1 General Purpose		NEMA 4/4X Stainless Watertight, Dust-tight, Corrosion Resistant 304 Stainless Steel		NEMA 4X Fiberglass Watertight, Dust-tight Corrosion Resistant		NEMA 12, NEMA 3/3R, NEMA 4 Painted Industrial Use Weatherproof Watertight, Dust-tight	
200 Volts	230 Volts	460 Volts	575 Volts	NEMA Size	Half Size	Motor Circuit Interruter ETI Amps	Amp Range	Frame Size	Catalog Number	List Price $	Catalog Number	List Price $	Catalog Number	List Price $	Catalog Number	List Price $
½	¾	1½	2	0	—	3	0.75–3.4	A	**32CUB†92B1V***		**32CUB†92W1V***		**32CUB†92F1V***		**32CUB†92N1V***	
2	2	5	5	0	—	10	3–12	A1	**32CUC†92B1V***		**32CUC†92W1V***		**32CUC†92F1V***		**32CUC†92N1V***	
3	3	—	—	0	—	25	5.5–22	A1	**32CUD†92B1V***		**32CUD†92W1V***		**32CUD†92F1V***		**32CUD†92N1V***	
½	¾	1½	1½	1	—	3	0.75–3.4	A	**32DUB†92B1V***		**32DUB†92W1V***		**32DUB†92F1V***		**32DUB†92N1V***	
2	2	5	5	1	—	10	3–12	A1	**32DUC†92B1V***		**32DUC†92W1V***		**32DUC†92F1V***		**32DUC†92N1V***	
3	3	10	10	1	—	25	5.5–22	A1	**32DUD†92B1V***		**32DUD†92W1V***		**32DUD†92F1V***		**32DUD†92N1V***	
7½	7½	—	—	1	—	30	10–40	A1	**32DUE†92B1V***		**32DUE†92W1V***		**32DUE†92F1V***		**32DUE†92N1V***	
—	—	15	15	—	1¾	40	10–40	A1	**32EUE†92B1V***		**32EUE†92W1V***		**32EUE†92F1V***		**32EUE†92N1V***	
10	15	25	25	2	—	50	13–52	B	**32FUF†92B1V***		**32FUF†92W1V***		**32FUF†92F1V***		**32FUF†92N1V***	
15	20	30	30	—	2½	100	25–100	B	**32GUG†92B1V***		**32GUG†92W1V***		**32GUG†92F1V***		**32GUG†92N1V***	
25	30	50	50	3	—	125	25–100	B	**32HUG†92B1V***		**32HUG†92W1V***		**32HUG†92F1V***		**32HUG†92N1V***	
30	40	75	75	—	3½	125	50–200	B	**32IUH†92B1V***		**32IUH†92W1V***		**32IUH†92F1V***		**32IUH†92N1V***	
40	50	100	100	4	—	150	50–200	B	**32JUH†92B1V***		**32JUH†92W1V***		**32JUH†92F1V***		**32JUH†92N1V***	

Note: All starter sizes carry one maximum Hp rating (per the National Electric Code).

① Dual voltage coils not available in modified starters.

② If motor FLA are unknown, select overload on the basis that low speed FLA will be no greater than 50% of high speed FLA.

MCP Type, Constant Horsepower with Solid State Overload, Class 32

Selection

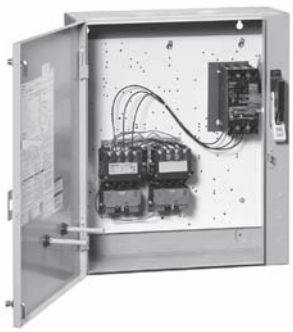

Ordering Information

- ► Replace the (*) with a letter from the coil table. Dual voltage coils are wired on high voltage unless specified on order.
- ► Replace the (†) with the letter that corresponds to the correct FLA in the High/Low Speed FLA table.②
- ► Field Modification Kits see page 9/104.
- ► Factory Modifications see page 9/119.
- ► Dimensions see page 9/166.
- ► Wiring Diagrams see page 9/178.
- ► Replacement Parts see page 9/131.

Coil Table

60Hz Voltage	Letter
24	J
120	F
110–120/220–240①	A
200–208	D
220–240	G
277	L
220–240/440–480①	C
440–480	H
575–600	E

For other voltages and frequencies see Factory Modifications page 9/119.

High/Low Speed FLA Table②

Size	FLA	OLR Frame Size	†
0,1	0.25–1	A	A
0,1	0.75–3.4	A	B
0,1	3–12	A1	C
0,1	5.5–22	A1	D
0-1 3/4	10–40	A1	E
2-3	13–52	B	F
2-3	25–100	B	G
3 1/2-4	50–200	B	H

* First (†) for high speed, second (†) for low speed. Use motor nameplate to select FLA. If motor FLA are unknown, select overload on the bases that the low speed FLA will be no greater than 50 % of high speed FLA.

One Winding Consequent Pole, 3-Phase (Constant Horsepower)

Max Hp							Overload		Enclosure							
									NEMA 1 General Purpose		NEMA 4/4X Stainless Watertight, Dust-tight, Corrosion Resistant 304 Stainless Steel		NEMA 4X Fiberglass Watertight, Dust-tight Corrosion Resistant		NEMA 12, NEMA 3/3R, NEMA 4 Painted Industrial Use Weatherproof Watertight, Dust-tight	
200 Volts	230 Volts	460 Volts	575 Volts	NEMA Size	Half Size	Motor Circuit Interruter ETI Amps	Amp Range	Frame Size	Catalog Number	List Price $	Catalog Number	List Price $	Catalog Number	List Price $	Catalog Number	List Price $
2	2	3	3	0	—	10	—	A or A1	**32CU††92B2H***		**32CU††92W2H***		**32CU††92F2H***		**32CU††92N2H***	
5	5	7½	7½	1	—	25	—	A or A1	**32DU††92B2H***		**32DU††92W2H***		**32DU††92F2H***		**32DU††92N2H***	
7½	7½	10	10	—	1¾	40	—	A1	**32EU††92B2H***		**32EU††92W2H***		**32EU††92F2H***		**32EU††92N2H***	
7½	10	20	20	2	—	50	—	B	**32FU††92B2H***		**32FU††92W2H***		**32FU††92F2H***		**32FU††92N2H***	
10	15	25	25	—	2½	100	—	B	**32GU††92B2H***		**32GU††92W2H***		**32GU††92F2H***		**32GU††92N2H***	
20	25	40	40	3	—	100	—	B	**32HU††92B2H***		**32HU††92W2H***		**32HU††92F2H***		**32HU††92N2H***	
25	30	50	50	—	3½	125	—	B	**32IU††92B2H***		**32IU††92W2H***		**32IU††92F2H***		**32IU††92N2H***	
30	40	75	75	4	—	150	—	B	**32JU††92B2H***		**32JU††92W2H***		**32JU††92F2H***		**32JU††92N2H***	

Two Separate Windings, 3-Phase (Constant Horsepower)

Max Hp							Overload		Enclosure							
									NEMA 1 General Purpose		NEMA 4/4X Stainless Watertight, Dust-tight, Corrosion Resistant 304 Stainless Steel		NEMA 4X Fiberglass Watertight, Dust-tight Corrosion Resistant		NEMA 12, NEMA 3/3R, NEMA 4 Painted Industrial Use Weatherproof Watertight, Dust-tight	
200 Volts	230 Volts	460 Volts	575 Volts	NEMA Size	Half Size	Motor Circuit Interruter ETI Amps	Amp Range	Frame Size	Catalog Number	List Price $	Catalog Number	List Price $	Catalog Number	List Price $	Catalog Number	List Price $
2	2	3	3	0	—	10	—	A or A1	**32CU††92B1H***		**32CU††92W1H***		**32CU††92F1H***		**32CU††92N1H***	
5	5	7½	7½	1	—	25	—	A or A1	**32DU††92B1H***		**32DU††92W1H***		**32DU††92F1H***		**32DU††92N1H***	
7½	7½	10	10	—	1¾	40	—	A1	**32EU††92B1H***		**32EU††92W1H***		**32EU††92F1H***		**32EU††92N1H***	
7½	10	20	20	2	—	50	—	B	**32FU††92B1H***		**32FU††92W1H***		**32FU††92F1H***		**32FU††92N1H***	
10	15	25	25	—	2½	100	—	B	**32GU††92B1H***		**32GU††92W1H***		**32GU††92F1H***		**32GU††92N1H***	
20	25	40	40	3	—	100	—	B	**32HU††92B1H***		**32HU††92W1H***		**32HU††92F1H***		**32HU††92N1H***	
25	30	50	50	—	3½	125	—	B	**32IU††92B1H***		**32IU††92W1H***		**32IU††92F1H***		**32IU††92N1H***	
30	40	75	75	4	—	150	—	B	**32JU††92B1H***		**32JU††92W1H***		**32JU††92F1H***		**32JU††92N1H***	

Note: All starter sizes carry one maximum Hp rating (per the National Electric Code).

① Dual voltage coils not available in modified starters.

② First † for high speed, second † for low speed. Use motor nameplate information to select FLA. If motor FLA are unknown, select overload on the basis that low speed FLA will be no greater than 50% of high speed FLA.

MCP Type, Constant or Variable Torque w/Ambient Compensated Bimetal Overload, Class 32

Selection

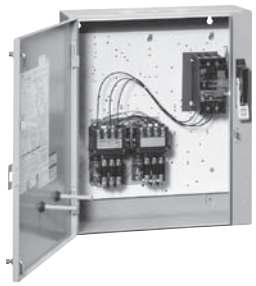

Ordering Information

- Replace the (*) with a letter from the coil table. Dual voltage coils are wired on high voltage unless specified on order.
- Heater elements see page 9/124. (6 Required)
- Field Modification Kits see page 9/104.
- Factory Modifications see page 9/119.
- Dimensions see page 9/166.
- Wiring Diagrams see page 9/178.
- Replacement Parts see page 9/131.
- For NO/NC SPDT contact on overload relay, replace "81" with "91". "81" indicates one NC contact..

Coil Table

60Hz Voltage	Letter
24	J
120	F
110–120/220–240①	A
200–208	D
220–240	G
277	L
220–240/440–480①	C
440–480	H
575–600	E

For other voltages and frequencies, see Factory Modifications page 9/119.

One Winding Consequent Pole, 3-Phase (Constant or Variable Torque)

Max Hp							Enclosure							
							NEMA 1 General Purpose		NEMA 4/4X Stainless Watertight, Dust-tight Corrosion Resistant 304 Stainless Steel		NEMA 4X Fiberglass Watertight, Dust-tight Corrosion Resistant		NEMA 12, NEMA 3/3R NEMA 4 Painted Industrial Use Weatherproof Watertight, Dust-tight	
200 Volts	230 Volts	460 Volts	575 Volts	NEMA Size	Half Size	Motor Circuit Interrupter ETI Amps	Catalog Number	List Price $	Catalog Number	List Price $	Catalog Number	List Price $	Catalog Number	List Price $
½	½	1	1	0	—	3	32CP92B2VA*81		32CP92W2VA*81		32CP92F2VA*81		32CP92N2VA*81	
1	1	3	3	0	—	10	32CP92B2VB*81		32CP92W2VB*81		32CP92F2VB*81		32CP92N2VB*81	
3	3	5	5	0	—	25	32CP92B2VC*81		32CP92W2VC*81		32CP92F2VC*81		32CP92N2VC*81	
1½	1½	1	1	1	—	3	32DP92B2VA*81		32DP92W2VA*81		32DP92F2VA*81		32DP92N2VA*81	
1	1	3	3	1	—	10	32DP92B2VB*81		32DP92W2VB*81		32DP92F2VB*81		32DP92N2VB*81	
3	3	7½	7½	1	—	25	32DP92B2VD*81		32DP92W2VD*81		32DP92F2VD*81		32DP92N2VD*81	
7½	7½	10	10	1	—	30	32DP92B2VE*81		32DP92W2VE*81		32DP92F2VE*81		32DP92N2VE*81	
—	—	15	15	—	1¾	40	32EP92B2VF*81		32EP92W2VF*81		32EP92F2VF*81		32EP92N2VF*81	
10	10	—	—	—	1¾	50	32EP92B2VG*81		32EP92W2VG*81		32EP92F2VG*81		32EP92N2VG*81	
—	—	20	20	2	—	40	32FP92B2VH*81		32FP92W2VH*81		32FP92F2VH*81		32FP92N2VH*81	
10	15	25	25	2	—	50	32FP92B2VJ*81		32FP92W2VJ*81		32FP92F2VJ*81		32FP92N2VJ*81	
10	15	30	30	—	2½	50	32GP92B2VK*81		32GP92W2VK*81		32GP92F2VK*81		32GP92N2VK*81	
15	20	—	—	—	2½	100	32GP92B2VL*81		32GP92W2VL*81		32GP92F2VL*81		32GP92N2VL*81	
—	—	30	30	3	—	50	32HP92B2VM*81		32HP92W2VM*81		32HP92F2VM*81		32HP92N2VM*81	
25	30	50	50	3	—	125	32HP92B2VN*81		32HP92W2VN*81		32HP92F2VN*81		32HP92N2VN*81	
30	40	75	75	—	3½	125	32IP92B2VP*81		32IP92W2VP*81		32IP92F2VP*81		32IP92N2VP*81	
40	50	100	100	4	—	150	32JP92B2VR*81		32JP92W2VR*81		32JP92F2VR*81		32JP92N2VR*81	

Two Separate Windings, 3-Phase (Constant or Variable Torque)

Max Hp							Enclosure							
							NEMA 1 General Purpose		NEMA 4/4X Stainless Watertight, Dust-tight Corrosion Resistant 304 Stainless Steel		NEMA 4X Fiberglass Watertight, Dust-tight Corrosion Resistant		NEMA 12, NEMA 3/3R NEMA 4 Painted Industrial Use Weatherproof Watertight, Dust-tight	
200 Volts	230 Volts	460 Volts	575 Volts	NEMA Size	Half Size	Motor Circuit Interrupter ETI Amps	Catalog Number	List Price $	Catalog Number	List Price $	Catalog Number	List Price $	Catalog Number	List Price $
½	½	1	1	0	—	3	32CP92B1VA*81		32CP92W1VA*81		32CP92F1VA*81		32CP92N1VA*81	
1	1	3	3	0	—	10	32CP92B1VB*81		32CP92W1VB*81		32CP92F1VB*81		32CP92N1VB*81	
3	3	5	5	0	—	25	32CP92B1VC*81		32CP92W1VC*81		32CP92F1VC*81		32CP92N1VC*81	
½	½	1	1	1	—	3	32DP92B1VA*81		32DP92W1VA*81		32DP92F1VA*81		32DP92N1VA*81	
1	1	3	3	1	—	10	32DP92B1VB*81		32DP92W1VB*81		32DP92F1VB*81		32DP92N1VB*81	
3	3	7½	7½	1	—	25	32DP92B1VD*81		32DP92W1VD*81		32DP92F1VD*81		32DP92N1VD*81	
7½	7½	10	10	1	—	30	32DP92B1VE*81		32DP92W1VE*81		32DP92F1VE*81		32DP92N1VE*81	
—	—	15	15	—	1¾	40	32EP92B1VF*81		32EP92W1VF*81		32EP92F1VF*81		32EP92N1VF*81	
10	10	—	—	—	1¾	50	32EP92B1VG*81		32EP92W1VG*81		32EP92F1VG*81		32EP92N1VG*81	
—	—	20	20	2	—	40	32FP92B1VH*81		32FP92W1VH*81		32FP92F1VH*81		32FP92N1VH*81	
10	15	25	25	2	—	50	32FP92B1VJ*81		32FP92W1VJ*81		32FP92F1VJ*81		32FP92N1VJ*81	
10	15	30	30	—	2½	50	32GP92B1VK*81		32GP92W1VK*81		32GP92F1VK*81		32GP92N1VK*81	
15	20	—	—	—	2½	100	32GP92B1VL*81		32GP92W1VL*81		32GP92F1VL*81		32GP92N1VL*81	
—	—	30	30	3	—	50	32HP92B1VM*81		32HP92W1VM*81		32HP92F1VM*81		32HP92N1VM*81	
25	30	50	50	3	—	125	32HP92B1VN*81		32HP92W1VN*81		32HP92F1VN*81		32HP92N1VN*81	
30	40	75	75	—	3½	125	32IP92B1VP*81		32IP92W1VP*81		32IP92F1VP*81		32IP92N1VP*81	
40	50	100	100	4	—	150	32JP92B1VR*81		32JP92W1VR*81		32JP92F1VR*81		32JP92N1VR*81	

Note: Hp's shown above are based on the overload amp range for the FLA's (per the National Electric Code) of typical industrial motors. All starter sizes carry one maximum Hp rating.

① Dual voltage coils not available in modified starters.

MCP, Constant Horsepower w/ Ambient Compensated Bimetal Overload, Class 32

Selection

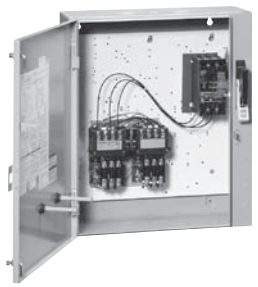

Ordering Information

- Replace the (*) with a letter from the coil table. Dual voltage coils are wired on high voltage unless specified on order.
- Heater elements see page 9/124. (6 Required)
- Field Modification Kits see page 9/104.
- Factory Modifications see page 9/119.
- Dimensions see page 9/166.
- Wiring Diagrams see page 9/178.
- Replacement Parts see page 9/131.
- For NO/NC SPDT contact on overload relay, replace "81" with "91". "81" indicates one NC contact..

Coil Table

60Hz Voltage	Letter
24	J
120	F
110–120/220–240①	A
200–208	D
220–240	G
277	L
220–240/440–480①	C
440–480	H
575–600	E

For other voltages and frequencies, see Factory Modifications page 9/119.

One Winding Consequent Pole, 3-Phase (Constant Horsepower)

Max Hp							Enclosure							
							NEMA 1 General Purpose		NEMA 4/4X Stainless Watertight, Dust-tight Corrosion Resistant 304 Stainless Steel		NEMA 4X Fiberglass Watertight, Dust-tight Corrosion Resistant		NEMA 12, NEMA 3/3R NEMA 4 Painted Industrial Use Weatherproof Watertight, Dust-tight	
200 Volts	230 Volts	460 Volts	575 Volts	NEMA Size	Half Size	Motor Circuit Interrupter ETI Amps	Catalog Number	List Price $	Catalog Number	List Price $	Catalog Number	List Price $	Catalog Number	List Price $
½	½	1	1	0	—	3	32CP92B2HA*81		32CP92W2HA*81		32CP92F2HA*81		32CP92N2HA*81	
1½	1½	3	3	0	—	10	32CP92B2HB*81		32CP92W2HB*81		32CP92F2HB*81		32CP92N2HB*81	
2	2	—	—	0	—	25	32CP92B2HC*81		32CP92W2HC*81		32CP92F2HC*81		32CP92N2HC*81	
½	½	1	1	1	—	3	32DP92B2HA*81		32DP92W2HA*81		32DP92F2HA*81		32DP92N2HA*81	
1½	1½	3	3	1	—	10	32DP92B2HB*81		32DP92W2HB*81		32DP92F2HB*81		32DP92N2HB*81	
3	3	7½	7½	1	—	25	32DP92B2HD*81		32DP92W2HD*81		32DP92F2HD*81		32DP92N2HD*81	
5	5	—	—	1	—	30	32DP92B2HE*81		32DP92W2HE*81		32DP92F2HE*81		32DP92N2HE*81	
—	—	10	10	—	1¾	40	32EP92B2HF*81		32EP92W2HF*81		32EP92F2HF*81		32EP92N2HF*81	
7½	7½	—	—	—	1¾	50	32EP92B2HG*81		32EP92W2HG*81		32EP92F2HG*81		32EP92N2HG*81	
—	7½	15	20	2	—	40	32FP92B2HH*81		32FP92W2HH*81		32FP92F2HH*81		32FP92N2HH*81	
7½	10	20	—	2	—	50	32FP92B2HJ*81		32FP92W2HJ*81		32FP92F2HJ*81		32FP92N2HJ*81	
—	—	30	30	—	2½	50	32GP92B2HK*81		32GP92W2HK*81		32GP92F2HK*81		32GP92N2HK*81	
10	15	30	40	3	—	50	32HP92B2HM*81		32HP92W2HM*81		32HP92F2HM*81		32HP92N2HM*81	
20	25	40	—	3	—	100	32HP92B2HN*81		32HP92W2HN*81		32HP92F2HN*81		32HP92N2HN*81	
25	30	50	50	—	3½	125	32IP92B2HP*81		32IP92W2HP*81		32IP92F2HP*81		32IP92N2HP*81	
30	40	75	75	4	—	150	32JP92B2HR*81		32JP92W2HR*81		32JP92F2HR*81		32JP92N2HR*81	

Two Separate Windings, 3-Phase (Constant Horsepower)

Max Hp							Enclosure							
							NEMA 1 General Purpose		NEMA 4/4X Stainless Watertight, Dust-tight Corrosion Resistant 304 Stainless Steel		NEMA 4X Fiberglass Watertight, Dust-tight Corrosion Resistant		NEMA 12, NEMA 3/3R NEMA 4 Painted Industrial Use Weatherproof Watertight, Dust-tight	
200 Volts	230 Volts	460 Volts	575 Volts	NEMA Size	Half Size	Motor Circuit Interrupter ETI Amps	Catalog Number	List Price $	Catalog Number	List Price $	Catalog Number	List Price $	Catalog Number	List Price $
½	½	1	1	0	—	3	32CP92B1HA*81		32CP92W1HA*81		32CP92F1HA*81		32CP92N1HA*81	
1½	1½	3	3	0	—	10	32CP92B1HB*81		32CP92W1HB*81		32CP92F1HB*81		32CP92N1HB*81	
2	2	—	—	0	—	25	32CP92B1HC*81		32CP92W1HC*81		32CP92F1HC*81		32CP92N1HC*81	
½	½	1	1	1	—	3	32DP92B1HA*81		32DP92W1HA*81		32DP92F1HA*81		32DP92N1HA*81	
1½	1½	3	3	1	—	10	32DP92B1HB*81		32DP92W1HB*81		32DP92F1HB*81		32DP92N1HB*81	
3	3	7½	7½	1	—	25	32DP92B1HD*81		32DP92W1HD*81		32DP92F1HD*81		32DP92N1HD*81	
5	5	—	—	1	—	30	32DP92B1HE*81		32DP92W1HE*81		32DP92F1HE*81		32DP92N1HE*81	
—	—	10	10	—	1¾	40	32EP92B1HF*81		32EP92W1HF*81		32EP92F1HF*81		32EP92N1HF*81	
7½	7½	—	—	—	1¾	50	32EP92B1HG*81		32EP92W1HG*81		32EP92F1HG*81		32EP92N1HG*81	
—	7½	15	20	2	—	40	32FP92B1HH*81		32FP92W1HH*81		32FP92F1HH*81		32FP92N1HH*81	
7½	10	20	—	2	—	50	32FP92B1HJ*81		32FP92W1HJ*81		32FP92F1HJ*81		32FP92N1HJ*81	
—	—	30	30	—	2½	50	32GP92B1HK*81		32GP92W1HK*81		32GP92F1HK*81		32GP92N1HK*81	
10	15	30	40	3	—	50	32HP92B1HM*81		32HP92W1HM*81		32HP92F1HM*81		32HP92N1HM*81	
20	25	40	—	3	—	100	32HP92B1HN*81		32HP92W1HN*81		32HP92F1HN*81		32HP92N1HN*81	
25	30	50	50	—	3½	125	32IP92B1HP*81		32IP92W1HP*81		32IP92F1HP*81		32IP92N1HP*81	
30	40	75	75	4	—	150	32JP92B1HR*81		32JP92W1HR*81		32JP92F1HR*81		32JP92N1HR*81	

Note: Hp's shown above are based on the overload amp range for the FLA's (per the National Electric Code) of typical industrial motors. All starter sizes carry one maximum Hp rating.

① Dual voltage coils not available in modified starters.

Features and Benefits

General

Siemens manufactures the three commonly used electromechanical reduced voltage starters. Each one is designed for specific application requirements and consists of auto transformer, wye-delta and partwinding starters.

The reduced voltage starter:

- Reduces inrush current
- Provides smoother acceleration of the load
- Reduces starting torque
- Reduces stresses on mechanical linkages

Combination and non-combination reduced voltage starter sizes range from 0 to 6 including Siemens exclusive motormatched half-sizes. Enclosure types include 1, 3R/12, 4 painted and 4/4X stainless steel. UL listed file #E14900 (class 36); file #E185287 (class 37). CSA certified file #LR 6535 (class 36 & 37).

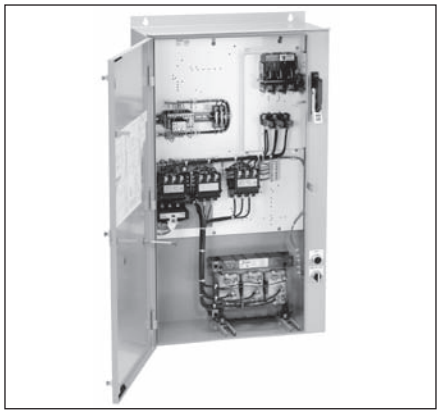

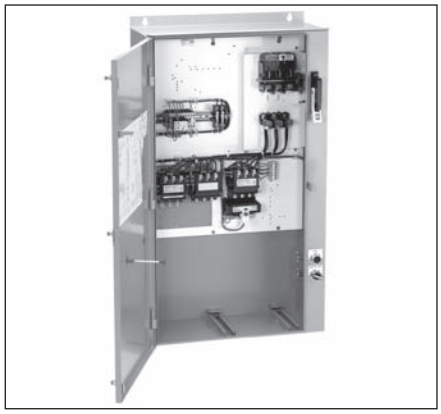

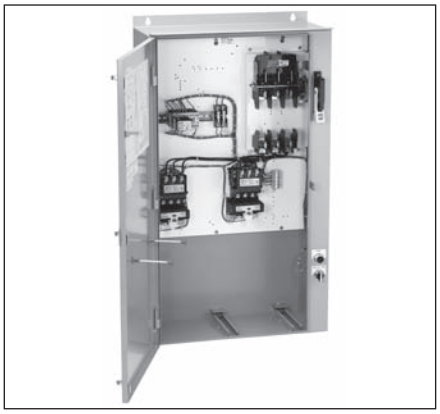

Auto Transformer Starter

- Maximum torque per amp
- Three coil auto transformer for balanced starting currents
- 50, 65 and 80% voltage taps
- Closed circuit transition
- Adjustable starting time
- Solid-state OLR overload as standard
- CPT supplied as standard
- Wide range of factory modifications

Wye-Delta Starter

- Lowest starting torque
- Closed or open circuit transition
- Adjustable starting time
- Solid-state OLR overload as standard
- CPT supplied as standard
- Wide range of factory modifications

Part-Winding Starter

- Simplest design – most economical
- Adjustable starting time
- Solid-state OLR overload as standard
- CPT supplied as standard
- Wide range of factory modifications

Various Methods of Electro-Mechanical Reduced Voltage Motor Starting —A General Comparison

	Autotransformer			Part-Winding	Wye-Delta
Characteristic	50% Tap	65% Tap	80% Tap	2 step	
Starting current drawn from line as % of that which would be drawn upon full voltage starting	25%	42%	64%	65%	33%
Starting current drawn by the motor	50%	65%	80%	65%	58%
Starting torque developed as % of that which would be developed on full voltage starting	25% Increases slightly with speed	42%	64%	40%	33%
Smoothness of acceleration	First in order of Smoothness			Third in order of Smoothness	Second in order of Smoothness
Allowable accelerating times (typical)	15 seconds at 200HP max. or 30 seconds on 200HP based on NEMA medium duty transformers			5 seconds max. Limited by motor design	5-60 seconds Limited by motor design
Starting current and torque and adjustments	Adjustable within limits of various taps			Fixed	Fixed

Auto Transformer with Solid State Overload, Class 36 & 37

Selection

Ordering Information

- Field Modification Kits see page 9/104.
- Factory Modifications see page 9/119.
- Dimensions see page 9/167.
- Wiring Diagrams see page 9/181.
- Replacement Parts see page 9/131.

Coil and Control Voltage

The coil voltage will always match the motor voltage. As standard, a CPT is supplied and 120V control voltage is utilized. To change to 120V voltage (CPT not supplied), change the 9th character to "F". To change to 24VAC voltage (CPT not supplied), change the 9th character to "J".

NEMA 1 General Purpose Enclosures

			Overload Relay		Non-Combination		Combination Non-Fusible Disconnect			Combination Fusible Disconnect			Combination Circit Breaker		
Motor Voltage	Max Hp	NEMA Size (1/2 Size)	Amp Range	Frame Size	Catalog Number	List Price $	Disc. Amp Rating	Catalog Number	List Price $	Fuse Clip Amp/Volt Rating	Catalog Number	List Price $	Circuit Breaker Amps	Catalog Number	List Price $
200	10	(1¾)	10–40	A1	**36EUET6BD**		60	**37EUET6BDD**		60A/250V	**37EUET6BDF**		50	**37EUET6BDP**	
	10	2	13–52	B	**36FUFT6BD**		60	**37FUFT6BDD**		60A/250V	**37FUFT6BDF**		50	**37FUFT6BDP**	
	15	(2½)	25–100	B	**36GUGT6BD**		100	**37GUGT6BDD**		100A/250V	**37GUGT6BDF**		100	**37GUGT6BDP**	
	25	3	25–100	B	**36HUGT6BD**		100	**37HUGT6BDD**		100A/250V	**37HUGT6BDF**		100	**37HUGT6BDP**	
	30	(3½)	50–200	B	**36IUHT6BD**		200	**37IUHT6BDD**		200A/250V	**37IUHT6BDF**		125	**37IUHT6BDP**	
	40	4	50–200	B	**36JUHT6BD**		200	**37JUHT6BDD**		200A/250V	**37JUHT6BDF**		150	**37JUHT6BDP**	
	50	5	55–250	—	—		—	—		—	—		250	**37LPST6BDP**	
	75	5	55–250	—	**36LPUT6BD**		400	**37LPUT6BDD**		400A/250V	**37LPUT6BDF**		400	**37LPUT6BDP**	
	150	6	160–630	—	**36MPXT6BD**		600	**37MPXT6BDD**		600A/250V	**37MPXT6BDF**		600	**37MPXT6BDP**	
230	10	(1¾)	10–40	A1	**36EUET2BG**		60	**37EUET2BGD**		60A/250V	**37EUET2BGF**		50	**37EUET2BGP**	
	15	2	13–52	B	**36FUFT2BG**		60	**37FUFT2BGD**		60A/250V	**37FUFT2BGF**		50	**37FUFT2BGP**	
	20	(2½)	25–100	B	**36GUGT2BG**		100	**37GUGT2BGD**		100A/250V	**37GUGT2BGF**		100	**37GUGT2BGP**	
	30	3	25–100	B	**36HUGT2BG**		100	**37HUGT2BGD**		100A/250V	**37HUGT2BGF**		100	**37HUGT2BGP**	
	40	(3½)	50–200	B	**36IUHT2BG**		200	**37IUHT2BGD**		200A/250V	**37IUHT2BGF**		125	**37IUHT2BGP**	
	50	4	50–200	B	**36JUHT2BG**		200	**37JUHT2BGD**		200A/250V	**37JUHT2BGF**		150	**37JUHT2BGP**	
	75	5	55–250	—	—		—	—		—	—		250	**37LPST2BGP**	
	100	5	55–250	—	**36LPUT2BG**		400	**37LPUT2BGD**		400A/250V	**37LPUT2BGF**		400	**37LPUT2BGP**	
	200	6	160–630	—	**36MPXT2BG**		600	**37MPXT2BGD**		600A/250V	**37MPXT2BGF**		600	**37MPXT2BGP**	
460	15	(1¾)	10–40	A1	**36EUET4BH**		60	**37EUET4BHD**		60A/600V	**37EUET4BHF**		50	**37EUET4BHP**	
	25	2	13–52	B	**36FUFT4BH**		60	**37FUFT4BHD**		60A/600V	**37FUFT4BHF**		50	**37FUFT4BHP**	
	30	(2½)	13–52	B	**36GUGT4BH**		100	**37GUGT4BHD**		100A/600V	**37GUGT4BHF**		100	**37GUGT4BHP**	
	50	3	25–100	B	**36HUGT4BH**		100	**37HUGT4BHD**		100A/600V	**37HUGT4BHF**		100	**37HUGT4BHP**	
	75	(3½)	50–200	B	**36IUHT4BH**		200	**37IUHT4BHD**		200A/600V	**37IUHT4BHF**		125	**37IUHT4BHP**	
	100	4	50–200	B	**36JUHT4BH**		200	**37JUHT4BHD**		200A/600V	**37JUHT4BHF**		150	**37JUHT4BHP**	
	150	5	55–250	—	—		—	—		—	—		250	**37LPST4BHP**	
	200	5	55–250	—	**36LPUT4BH**		400	**37LPUT4BHD**		400A/600V	**37LPUT4BHF**		400	**37LPUT4BHP**	
	400	6	160–630	—	**36MPXT4BH**		600	**37MPXT4BHD**		600A/600V	**37MPXT4BHF**		600	**37MPXT4BHP**	
575	15	(1¾)	10–40	A1	**36EUET5BE**		60	**37EUET5BED**		60A/600V	**37EUET5BEF**		50	**37EUET5BEP**	
	25	2	13–52	B	**36FUFT5BE**		60	**37FUFT5BED**		60A/600V	**37FUFT5BEF**		50	**37FUFT5BEP**	
	30	(2½)	13–52	B	**36GUGT5BE**		100	**37GUGT5BED**		100A/600V	**37GUGT5BEF**		100	**37GUGT5BEP**	
	50	3	25–100	B	**36HUGT5BE**		100	**37HUGT5BED**		100A/600V	**37HUGT5BEF**		100	**37HUGT5BEP**	
	75	(3½)	50–200	B	**36IUHT5BE**		200	**37IUHT5BED**		200A/600V	**37IUHT5BEF**		125	**37IUHT5BEP**	
	100	4	50–200	B	**36JUHT5BE**		200	**37JUHT5BED**		200A/600V	**37JUHT5BEF**		150	**37JUHT5BEP**	
	150	5	55–250	—	—		—	—		—	—		250	**37LPST5BEP**	
	200	5	55–250	—	**36LPUT5BE**		400	**37LPUT5BED**		400A/600V	**37LPUT5BEF**		400	**37LPUT5BEP**	
	400	6	160–630	—	**36MPXT5BE**		600	**37MPXT5BED**		600A/600V	**37MPXT5BEF**		600	**37MPXT5BEP**	

Note: All starter sizes carry one maximum Hp rating (per the National Electric Code).

Auto Transformer with Solid State Overload, Class 36 & 37

Selection

Ordering Information

- Field Modification Kits see page 9/104.
- Factory Modifications see page 9/119.
- Dimensions see page 9/167.
- Wiring Diagrams see page 9/181.
- Replacement Parts see page 9/131.

Coil and Control Voltage

The coil voltage will always match the motor voltage. As standard, a CPT is supplied and 120V control voltage is utilized. To change to 120V voltage (CPT not supplied), change the 9th character to "F". To change to 24VAC voltage (CPT not supplied), change the 9th character to "J".

NEMA 4 Painted Enclosures

			Overload Relay		Non-Combination		Combination Non-Fusible Disconnect			Combination Fusible Disconnect			Combination Circit Breaker		
Motor Voltage	Max Hp	NEMA Size (1/2 Size)	Amp Range	Frame Size	Catalog Number	List Price $	Disc. Amp Rating	Catalog Number	List Price $	Fuse Clip Amp/Volt Rating	Catalog Number	List Price $	Circuit Breaker Amps	Catalog Number	List Price $
200	10	(1¾)	10–40	A1	**36EUET6ED**		60	**37EUET6EDD**		60A/250V	**37EUET6EDF**		50	**37EUET6EDP**	
	10	2	13–52	B	**36FUFT6ED**		60	**37FUFT6EDD**		60A/250V	**37FUFT6EDF**		50	**37FUFT6EDP**	
	15	(2½)	25–100	B	**36GUGT6ED**		100	**37GUGT6EDD**		100A/250V	**37GUGT6EDF**		100	**37GUGT6EDP**	
	25	3	25–100	B	**36HUGT6ED**		100	**37HUGT6EDD**		100A/250V	**37HUGT6EDF**		100	**37HUGT6EDP**	
	30	(3½)	50–200	B	**36IUHT6ED**		200	**37IUHT6EDD**		200A/250V	**37IUHT6EDF**		125	**37IUHT6EDP**	
	40	4	50–200	B	**36JUHT6ED**		200	**37JUHT6EDD**		200A/250V	**37JUHT6EDF**		150	**37JUHT6EDP**	
	50	5	55–250	—	—		—	—		—	—		250	**37LPST6EDP**	
	75	5	55–250	—	**36LPUT6ED**		400	**37LPUT6EDD**		400A/250V	**37LPUT6EDF**		400	**37LPUT6EDP**	
	150	6	160–630	—	**36MPXT6ED**		600	**37MPXT6EDD**		600A/250V	**37MPXT6EDF**		600	**37MPXT6EDP**	
230	10	(1¾)	10–40	A1	**36EUET2EG**		60	**37EUET2EGD**		60A/250V	**37EUET2EGF**		50	**37EUET2EGP**	
	15	2	13–52	B	**36FUFT2EG**		60	**37FUFT2EGD**		60A/250V	**37FUFT2EGF**		50	**37FUFT2EGP**	
	20	(2½)	25–100	B	**36GUGT2EG**		100	**37GUGT2EGD**		100A/250V	**37GUGT2EGF**		100	**37GUGT2EGP**	
	30	3	25–100	B	**36HUGT2EG**		100	**37HUGT2EGD**		100A/250V	**37HUGT2EGF**		100	**37HUGT2EGP**	
	40	(3½)	50–200	B	**36IUHT2EG**		200	**37IUHT2EGD**		200A/250V	**37IUHT2EGF**		125	**37IUHT2EGP**	
	50	4	50–200	B	**36JUHT2EG**		200	**37JUHT2EGD**		200A/250V	**37JUHT2EGF**		150	**37JUHT2EGP**	
	75	5	55–250	—	—		—	—		—	—		250	**37LPST2EGP**	
	100	5	55–250	—	**36LPUT2EG**		400	**37LPUT2EGD**		400A/250V	**37LPUT2EGF**		400	**37LPUT2EGP**	
	200	6	160–630	—	**36MPXT2EG**		600	**37MPXT2EGD**		600A/250V	**37MPXT2EGF**		600	**37MPXT2EGP**	
460	15	(1¾)	10–40	A1	**36EUET4EH**		60	**37EUET4EHD**		60A/600V	**37EUET4EHF**		50	**37EUET4EHP**	
	25	2	13–52	B	**36FUFT4EH**		60	**37FUFT4EHD**		60A/600V	**37FUFT4EHF**		50	**37FUFT4EHP**	
	30	(2½)	13–52	B	**36GUGT4EH**		100	**37GUGT4EHD**		100A/600V	**37GUGT4EHF**		100	**37GUGT4EHP**	
	50	3	25–100	B	**36HUGT4EH**		100	**37HUGT4EHD**		100A/600V	**37HUGT4EHF**		100	**37HUGT4EHP**	
	75	(3½)	50–200	B	**36IUHT4EH**		200	**37IUHT4EHD**		200A/600V	**37IUHT4EHF**		125	**37IUHT4EHP**	
	100	4	50–200	B	**36JUHT4EH**		200	**37JUHT4EHD**		200A/600V	**37JUHT4EHF**		150	**37JUHT4EHP**	
	150	5	55–250	—	—		—	—		—	—		250	**37LPST4EHP**	
	200	5	55–250	—	**36LPUT4EH**		400	**37LPUT4EHD**		400A/600V	**37LPUT4EHF**		400	**37LPUT4EHP**	
	400	6	160–630	—	**36MPXT4EH**		600	**37MPXT4EHD**		600A/600V	**37MPXT4EHF**		600	**37MPXT4EHP**	
575	15	(1¾)	10–40	A1	**36EUET5EE**		60	**37EUET5EED**		60A/600V	**37EUET5EEF**		50	**37EUET5EEP**	
	25	2	13–52	B	**36FUFT5EE**		60	**37FUFT5EED**		60A/600V	**37FUFT5EEF**		50	**37FUFT5EEP**	
	30	(2½)	13–52	B	**36GUGT5EE**		100	**37GUGT5EED**		100A/600V	**37GUGT5EEF**		100	**37GUGT5EEP**	
	50	3	25–100	B	**36HUGT5EE**		100	**37HUGT5EED**		100A/600V	**37HUGT5EEF**		100	**37HUGT5EEP**	
	75	(3½)	50–200	B	**36IUHT5EE**		200	**37IUHT5EED**		200A/600V	**37IUHT5EEF**		125	**37IUHT5EEP**	
	100	4	50–200	B	**36JUHT5EE**		200	**37JUHT5EED**		200A/600V	**37JUHT5EEF**		150	**37JUHT5EEP**	
	150	5	55–250	—	—		—	—		—	—		250	**37LPST5EEP**	
	200	5	55–250	—	**36LPUT5EE**		400	**37LPUT5EED**		400A/600V	**37LPUT5EEF**		400	**37LPUT5EEP**	
	400	6	160–630	—	**36MPXT5EE**		600	**37MPXT5EED**		600A/600V	**37MPXT5EEF**		600	**37MPXT5EEP**	

Note: All starter sizes carry one maximum Hp rating (per the National Electric Code).

Auto Transformer with Solid State Overload, Class 36 & 37

Selection

Ordering Information

- Field Modification Kits see page 9/104.
- Factory Modifications see page 9/119.
- Dimensions see page 9/167.
- Wiring Diagrams see page 9/181.
- Replacement Parts see page 9/131.

Coil and Control Voltage

The coil voltage will always match the motor voltage. As standard, a CPT is supplied and 120V control voltage is utilized. To change to 120V voltage (CPT not supplied), change the 9th character to "F". To change to 24VAC voltage (CPT not supplied), change the 9th character to "J".

NEMA 4/4X Stainless Steel Enclosures

			Overload Relay		Non-Combination		Combination Non-Fusible Disconnect			Combination Fusible Disconnect			Combination Circit Breaker		
Motor Voltage	Max Hp	NEMA Size (1/2 Size)	Amp Range	Frame Size	Catalog Number	List Price $	Disc. Amp Rating	Catalog Number	List Price $	Fuse Clip Amp/Volt Rating	Catalog Number	List Price $	Circuit Breaker Amps	Catalog Number	List Price $
200	10	(1¾)	10–40	A1	**36EUET6WD**		60	**37EUET6WDD**		60A/250V	**37EUET6WDF**		50	**37EUET6WDP**	
	10	2	13–52	B	**36FUFT6WD**		60	**37FUFT6WDD**		60A/250V	**37FUFT6WDF**		50	**37FUFT6WDP**	
	15	(2½)	25–100	B	**36GUGT6WD**		100	**37GUGT6WDD**		100A/250V	**37GUGT6WDF**		100	**37GUGT6WDP**	
	25	3	25–100	B	**36HUGT6WD**		100	**37HUGT6WDD**		100A/250V	**37HUGT6WDF**		100	**37HUGT6WDP**	
	30	(3½)	50–200	B	**36IUHT6WD**		200	**37IUHT6WDD**		200A/250V	**37IUHT6WDF**		125	**37IUHT6WDP**	
	40	4	50–200	B	**36JUHT6WD**		200	**37JUHT6WDD**		200A/250V	**37JUHT6WDF**		150	**37JUHT6WDP**	
230	10	(1¾)	10–40	A1	**36EUET2WG**		60	**37EUET2WGD**		60A/250V	**37EUET2WGF**		50	**37EUET2WGP**	
	15	2	13–52	B	**36FUFT2WG**		60	**37FUFT2WGD**		60A/250V	**37FUFT2WGF**		50	**37FUFT2WGP**	
	20	(2½)	25–100	B	**36GUGT2WG**		100	**37GUGT2WGD**		100A/250V	**37GUGT2WGF**		100	**37GUGT2WGP**	
	30	3	25–100	B	**36HUGT2WG**		100	**37HUGT2WGD**		100A/250V	**37HUGT2WGF**		100	**37HUGT2WGP**	
	40	(3½)	50–200	B	**36IUHT2WG**		200	**37IUHT2WGD**		200A/250V	**37IUHT2WGF**		125	**37IUHT2WGP**	
	50	4	50–200	B	**36JUHT2WG**		200	**37JUHT2WGD**		200A/250V	**37JUHT2WGF**		150	**37JUHT2WGP**	
460	15	(1¾)	10–40	A1	**36EUET4WH**		60	**37EUET4WHD**		60A/600V	**37EUET4WHF**		50	**37EUET4WHP**	
	25	2	13–52	B	**36FUFT4WH**		60	**37FUFT4WHD**		60A/600V	**37FUFT4WHF**		50	**37FUFT4WHP**	
	30	(2½)	13–52	B	**36GUGT4WH**		100	**37GUGT4WHD**		100A/600V	**37GUGT4WHF**		100	**37GUGT4WHP**	
	50	3	25–100	B	**36HUGT4WH**		100	**37HUGT4WHD**		100A/600V	**37HUGT4WHF**		100	**37HUGT4WHP**	
	75	(3½)	50–200	B	**36IUHT4WH**		200	**37IUHT4WHD**		200A/600V	**37IUHT4WHF**		125	**37IUHT4WHP**	
	100	4	50–200	B	**36JUHT4WH**		200	**37JUHT4WHD**		200A/600V	**37JUHT4WHF**		150	**37JUHT4WHP**	
575	15	(1¾)	10–40	A1	**36EUET5WE**		60	**37EUET5WED**		60A/600V	**37EUET5WEF**		50	**37EUET5WEP**	
	25	2	13–52	B	**36FUFT5WE**		60	**37FUFT5WED**		60A/600V	**37FUFT5WEF**		50	**37FUFT5WEP**	
	30	(2½)	13–52	B	**36GUGT5WE**		100	**37GUGT5WED**		100A/600V	**37GUGT5WEF**		100	**37GUGT5WEP**	
	50	3	25–100	B	**36HUGT5WE**		100	**37HUGT5WED**		100A/600V	**37HUGT5WEF**		100	**37HUGT5WEP**	
	75	(3½)	50–200	B	**36IUHT5WE**		200	**37IUHT5WED**		200A/600V	**37IUHT5WEF**		125	**37IUHT5WEP**	
	100	4	50–200	B	**36JUHT5WE**		200	**37JUHT5WED**		200A/600V	**37JUHT5WEF**		150	**37JUHT5WEP**	

Note: All starter sizes carry one maximum Hp rating (per the National Electric Code).

Auto Transformer with Solid State Overload, Class 36 & 37

Selection

Ordering Information

- Field Modification Kits see page 9/104.
- Factory Modifications see page 9/119.
- Dimensions see page 9/167.
- Wiring Diagrams see page 9/181.
- Replacement Parts see page 9/131.

Coil and Control Voltage

The coil voltage will always match the motor voltage. As standard, a CPT is supplied and 120V control voltage is utilized. To change to 120V voltage (CPT not supplied), change the 9th character to "F". To change to 24VAC voltage (CPT not supplied), change the 9th character to "J".

NEMA 12, NEMA 3/3R

			Overload Relay		Non-Combination		Combination Non-Fusible Disconnect			Combination Fusible Disconnect			Combination Circit Breaker		
Motor Voltage	Max Hp	NEMA Size (1/2 Size)	Amp Range	Frame Size	Catalog Number	List Price $	Disc. Amp Rating	Catalog Number	List Price $	Fuse Clip Amp/Volt Rating	Catalog Number	List Price $	Circuit Breaker Amps	Catalog Number	List Price $
200	10	(1¾)	10–40	A1	**36EUET6ND**		60	**37EUET6NDD**		60A/250V	**37EUET6NDF**		50	**37EUET6NDP**	
	10	2	13–52	B	**36FUFT6ND**		60	**37FUFT6NDD**		60A/250V	**37FUFT6NDF**		50	**37FUFT6NDP**	
	15	(2½)	25–100	B	**36GUGT6ND**		100	**37GUGT6NDD**		100A/250V	**37GUGT6NDF**		100	**37GUGT6NDP**	
	25	3	25–100	B	**36HUGT6ND**		100	**37HUGT6NDD**		100A/250V	**37HUGT6NDF**		100	**37HUGT6NDP**	
	30	(3½)	50–200	B	**36IUHT6ND**		200	**37IUHT6NDD**		200A/250V	**37IUHT6NDF**		125	**37IUHT6NDP**	
	40	4	50–200	B	**36JUHT6ND**		200	**37JUHT6NDD**		200A/250V	**37JUHT6NDF**		150	**37JUHT6NDP**	
	50	5	55–250	—	—		—	—		—	—		250	**37LPST6NDP**	
	75	5	55–250	—	**36LPUT6ND**		400	**37LPUT6NDD**		400A/250V	**37LPUT6NDF**		400	**37LPUT6NDP**	
	150	6	160–630	—	**36MPXT6ND**		600	**37MPXT6NDD**		600A/250V	**37MPXT6NDF**		600	**37MPXT6NDP**	
230	10	(1¾)	10–40	A1	**36EUET2NG**		60	**37EUET2NGD**		60A/250V	**37EUET2NGF**		50	**37EUET2NGP**	
	15	2	13–52	B	**36FUFT2NG**		60	**37FUFT2NGD**		60A/250V	**37FUFT2NGF**		50	**37FUFT2NGP**	
	20	(2½)	25–100	B	**36GUGT2NG**		100	**37GUGT2NGD**		100A/250V	**37GUGT2NGF**		100	**37GUGT2NGP**	
	30	3	25–100	B	**36HUGT2NG**		100	**37HUGT2NGD**		100A/250V	**37HUGT2NGF**		100	**37HUGT2NGP**	
	40	(3½)	50–200	B	**36IUHT2NG**		200	**37IUHT2NGD**		200A/250V	**37IUHT2NGF**		125	**37IUHT2NGP**	
	50	4	50–200	B	**36JUHT2NG**		200	**37JUHT2NGD**		200A/250V	**37JUHT2NGF**		150	**37JUHT2NGP**	
	75	5	55–250	—	—		—	—		—	—		250	**37LPST2NGP**	
	100	5	55–250	—	**36LPUT2NG**		400	**37LPUT2NGD**		400A/250V	**37LPUT2NGF**		400	**37LPUT2NGP**	
	200	6	160–630	—	**36MPXT2NG**		600	**37MPXT2NGD**		600A/250V	**37MPXT2NGF**		600	**37MPXT2NGP**	
460	15	(1¾)	10–40	A1	**36EUET4NH**		60	**37EUET4NHD**		60A/600V	**37EUET4NHF**		50	**37EUET4NHP**	
	25	2	13–52	B	**36FUFT4NH**		60	**37FUFT4NHD**		60A/600V	**37FUFT4NHF**		50	**37FUFT4NHP**	
	30	(2½)	13–52	B	**36GUGT4NH**		100	**37GUGT4NHD**		100A/600V	**37GUGT4NHF**		100	**37GUGT4NHP**	
	50	3	25–100	B	**36HUGT4NH**		100	**37HUGT4NHD**		100A/600V	**37HUGT4NHF**		100	**37HUGT4NHP**	
	75	(3½)	50–200	B	**36IUHT4NH**		200	**37IUHT4NHD**		200A/600V	**37IUHT4NHF**		125	**37IUHT4NHP**	
	100	4	50–200	B	**36JUHT4NH**		200	**37JUHT4NHD**		200A/600V	**37JUHT4NHF**		150	**37JUHT4NHP**	
	150	5	55–250	—	—		—	—		—	—		250	**37LPST4NHP**	
	200	5	55–250	—	**36LPUT4NH**		400	**37LPUT4NHD**		400A/600V	**37LPUT4NHF**		400	**37LPUT4NHP**	
	400	6	160–630	—	**36MPXT4NH**		600	**37MPXT4NHD**		600A/600V	**37MPXT4NHF**		600	**37MPXT4NHP**	
575	15	(1¾)	10–40	A1	**36EUET5NE**		60	**37EUET5NED**		60A/600V	**37EUET5NEF**		50	**37EUET5NEP**	
	25	2	13–52	B	**36FUFT5NE**		60	**37FUFT5NED**		60A/600V	**37FUFT5NEF**		50	**37FUFT5NEP**	
	30	(2½)	13–52	B	**36GUGT5NE**		100	**37GUGT5NED**		100A/600V	**37GUGT5NEF**		100	**37GUGT5NEP**	
	50	3	25–100	B	**36HUGT5NE**		100	**37HUGT5NED**		100A/600V	**37HUGT5NEF**		100	**37HUGT5NEP**	
	75	(3½)	50–200	B	**36IUHT5NE**		200	**37IUHT5NED**		200A/600V	**37IUHT5NEF**		125	**37IUHT5NEP**	
	100	4	50–200	B	**36JUHT5NE**		200	**37JUHT5NED**		200A/600V	**37JUHT5NEF**		150	**37JUHT5NEP**	
	150	5	55–250	—	—		—	—		—	—		250	**37LPST5NEP**	
	200	5	55–250	—	**36LPUT5NE**		400	**37LPUT5NED**		400A/600V	**37LPUT5NEF**		400	**37LPUT5NEP**	
	400	6	160–630	—	**36MPXT5NE**		600	**37MPXT5NED**		600A/600V	**37MPXT5NEF**		600	**37MPXT5NEP**	

Note: All starter sizes carry one maximum Hp rating (per the National Electric Code).

2 Step Part Winding with Solid State Overload, Class 36 & 37

Selection

Ordering Information

- Field Modification Kits see page 9/104.
- Factory Modifications see page 9/119.
- Dimensions see page page 9/167.
- Wiring Diagrams see page 9/180.
- Replacement Parts see page 9/131.

Coil and Control Voltage

The coil voltage will always match the motor voltage. As standard, a CPT is supplied and 120V control voltage is utilized. To change to 120V voltage (CPT not supplied), change the 9th character to "F". To change to 24VAC voltage (CPT not supplied), change the 9th character to "J".

NEMA 1 General Purpose Enclosures

			Overload Relay		Non-Combination		Combination Non-Fusible Disconnect			Combination Fusible Disconnect			Combination Circit Breaker		
Motor Voltage	Max Hp	NEMA Size (1/2 Size)	Amp Range	Frame Size	Catalog Number	List Price $	Disc. Amp Rating	Catalog Number	List Price $	Fuse Clip Amp/Volt Rating	Catalog Number	List Price $	Circuit Breaker Amps	Catalog Number	List Price $
200	7½	0	5.5–22	A1	**36CUDP6BD**		60	**37CUDP6BDD**		60A/250V	**37CUDP6BDF**		30	**37CUDP6BDP**	
	10	1	5.5–22	A1	**36DUDP6BD**		60	**37DUDP6BDD**		60A/250V	**37DUDP6BDF**		50	**37DUDP6BDP**	
	15	(1¾)	10–40	A1	**36EUEP6BD**		100	**37EUEP6BDD**		100A/250V	**37EUEP6BDF**		100	**37EUEP6BDP**	
	20	2	13–52	B	**36FUFP6BD**		100	**37FUFP6BDD**		100A/250V	**37FUFP6BDF**		100	**37FUFP6BDP**	
	30	(2½)	25–100	B	**36GUGP6BD**		200	**37GUGP6BDD**		200A/250V	**37GUGP6BDF**		125	**37GUGP6BDP**	
	40	3	25–100	B	**36HUGP6BD**		200	**37HUGP6BDD**		200A/250V	**37HUGP6BDF**		150	**37HUGP6BDP**	
	50	(3½)	50–200	B	**36IUHP6BD**		200	**37IUHP6BDD**		200A/250V	**37IUHP6BDF**		250	**37IUHP6BDP**	
	75	4	50–200	B	**36JUHP6BD**		400	**37JUHP6BDD**		400A/250V	**37JUHP6BDF**		400	**37JUHP6BDP**	
	100	5	55–250	—	—		—	—		—	—		600	**37LPSP6BDP**	
	150	5	55–250	—	**36LPUP6BD**		600	**37LPUP6BDD**		600A/250V	**37LPUP6BDF**		600	**37LPUP6BDP**	
230	7½	0	5.5–22	A1	**36CUDP2BG**		60	**37CUDP2BGD**		60A/250V	**37CUDP2BGF**		30	**37CUDP2BGP**	
	10	1	5.5–22	A1	**36DUDP2BG**		60	**37DUDP2BGD**		60A/250V	**37DUDP2BGF**		50	**37DUDP2BGP**	
	20	(1½)	10–40	A1	**36EUEP2BG**		100	**37EUEP2BGD**		100A/250V	**37EUEP2BGF**		100	**37EUEP2BGP**	
	25	2	13–52	B	**36FUFP2BG**		100	**37FUFP2BGD**		100A/250V	**37FUFP2BGF**		100	**37FUFP2BGP**	
	30	(2½)	25–100	B	**36GUGP2BG**		200	**37GUGP2BGD**		200A/250V	**37GUGP2BGF**		100	**37GUGP2BGP**	
	50	3	25–100	B	**36HUGP2BG**		200	**37HUGP2BGD**		200A/250V	**37HUGP2BGF**		150	**37HUGP2BGP**	
	60	(3½)	50–200	B	**36IUHP2BG**		200	**37IUHP2BGD**		200A/250V	**37IUHP2BGF**		250	**37IUHP2BGP**	
	75	4	50–200	B	**36JUHP2BG**		400	**37JUHP2BGD**		400A/250V	**37JUHP2BGF**		250	**37JUHP2BGP**	
	125	5	55–250	—	—		—	—		—	—		400	**37LPSP2BGP**	
	150	5	55–250	—	**36LPUP2BG**		600	**37LPUP2BGD**		600A/250V	**37LPUP2BGF**		600	**37LPUP2BGP**	
	300	6	160–630	—	**36MPXP2BG**		1200	**37MPXP2BGD**		1200A/250V	**37MPXP2BGF**		1200	**37MPXP2BGP**	
460	10	0	5.5–22	A1	**36CUDP4BH**		30	**37CUDP4BHD**		30A/600V	**37CUDP4BHF**		30	**37CUDP4BHP**	
	15	1	5.5–22	A1	**36DUDP4BH**		60	**37DUDP4BHD**		60A/600V	**37DUDP4BHF**		30	**37DUDP4BHP**	
	30	(1¾)	10–40	A1	**36EUEP4BH**		60	**37EUEP4BHD**		60A/600V	**37EUEP4BHF**		50	**37EUEP4BHP**	
	40	2	13–52	B	**36FUFP4BH**		100	**37FUFP4BHD**		100A/600V	**37FUFP4BHF**		100	**37FUFP4BHP**	
	60	(2½)	25–100	B	**36GUGP4BH**		200	**37GUGP4BHD**		200A/600V	**37GUGP4BHF**		100	**37GUGP4BHP**	
	75	3	25–100	B	**36HUGP4BH**		200	**37HUGP4BHD**		200A/600V	**37HUGP4BHF**		125	**37HUGP4BHP**	
	100	(3½)	50–200	B	**36IUHP4BH**		200	**37IUHP4BHD**		200A/600V	**37IUHP4BHF**		150	**37IUHP4BHP**	
	150	4	50–200	B	**36JUHP4BH**		400	**37JUHP4BHD**		400A/600V	**37JUHP4BHF**		250	**37JUHP4BHP**	
	250	5	55–250	—	—		—	—		—	—		400	**37LPSP4BHP**	
	350	5	55–250	—	**36LPUP4BH**		600	**37LPUP4BHD**		600A/600V	**37LPUP4BHF**		600	**37LPUP4BHP**	
	600	6	160–630	—	**36MPXP4BH**		1200	**37MPXP4BHD**		1200A/600V	**37MPXP4BHF**		1200	**37MPXP4BHP**	
575	10	0	5.5–22	A1	**36CUDP5BE**		30	**37CUDP5BED**		30A/600V	**37CUDP5BEF**		30	**37CUDP5BEP**	
	15	1	5.5–22	A1	**36DUDP5BE**		60	**37DUDP5BED**		60A/600V	**37DUDP5BEF**		30	**37DUDP5BEP**	
	30	(1¾)	10–40	A1	**36EUEP5BE**		60	**37EUEP5BED**		60A/600V	**37EUEP5BEF**		50	**37EUEP5BEP**	
	40	2	13–52	B	**36FUFP5BE**		60	**37FUFP5BED**		60A/600V	**37FUFP5BEF**		50	**37FUFP5BEP**	
	60	(2½)	25–100	B	**36GUGP5BE**		100	**37GUGP5BED**		100A/600V	**37GUGP5BEF**		100	**37GUGP5BEP**	
	75	3	25–100	B	**36HUGP5BE**		200	**37HUGP5BED**		200A/600V	**37HUGP5BEF**		125	**37HUGP5BEP**	
	100	(3½)	50–200	B	**36IUHP5BE**		400	**37IUHP5BED**		400A/600V	**37IUHP5BEF**		150	**37IUHP5BEP**	
	150	4	50–200	B	**36JUHP5BE**		400	**37JUHP5BED**		400A/600V	**37JUHP5BEF**		250	**37JUHP5BEP**	
	250	5	55–250	—	—		—	—		400A/600V	**37LPSP5BEF**		—	—	
	350	5	55–250	—	**36LPUP5BE**		600	**37LPUP5BED**		600A/600V	**37LPUP5BEF**		400	**37LPUP5BEP**	
	600	6	160–630	—	**36MPXP5BE**		1200	**37MPXP5BED**		1200A/600V	**37MPXP5BEF**		1200	**37MPXP5BEP**	

Note: All starter sizes carry one maximum Hp rating (per the National Electric Code).

2 Step Part Winding with Solid State Overload, Class 36 & 37

Selection

Ordering Information

- Field Modification Kits see page 9/104.
- Factory Modifications see page 9/119.
- Dimensions see page page 9/167.
- Wiring Diagrams see page 9/180.
- Replacement Parts see page 9/131.

Coil and Control Voltage

The coil voltage will always match the motor voltage. As standard, a CPT is supplied and 120V control voltage is utilized. To change to 120V voltage (CPT not supplied), change the 9th character to "F". To change to 24VAC voltage (CPT not supplied), change the 9th character to "J".

NEMA 4 Painted Enclosures

			Overload Relay		Non-Combination		Combination Non-Fusible Disconnect			Combination Fusible Disconnect			Combination Circit Breaker		
Motor Voltage	Max Hp	NEMA Size (1/2 Size)	Amp Range	Frame Size	Catalog Number	List Price $	Disc. Amp Rating	Catalog Number	List Price $	Fuse Clip Amp/Volt Rating	Catalog Number	List Price $	Circuit Breaker Amps	Catalog Number	List Price $
200	7½	0	5.5–22	A1	**36CUDP6ED**		60	**37CUDP6EDD**		60A/250V	**37CUDP6EDF**		30	**37CUDP6EDP**	
	10	1	5.5–22	A1	**36DUDP6ED**		60	**37DUDP6EDD**		60A/250V	**37DUDP6EDF**		50	**37DUDP6EDP**	
	15	(1¾)	10–40	A1	**36EUEP6ED**		100	**37EUEP6EDD**		100A/250V	**37EUEP6EDF**		100	**37EUEP6EDP**	
	20	2	13–52	B	**36FUFP6ED**		100	**37FUFP6EDD**		100A/250V	**37FUFP6EDF**		100	**37FUFP6EDP**	
	30	(2½)	25–100	B	**36GUGP6ED**		200	**37GUGP6EDD**		200A/250V	**37GUGP6EDF**		125	**37GUGP6EDP**	
	40	3	25–100	B	**36HUGP6ED**		200	**37HUGP6EDD**		200A/250V	**37HUGP6EDF**		150	**37HUGP6EDP**	
	50	(3½)	50–200	B	**36IUHP6ED**		200	**37IUHP6EDD**		200A/250V	**37IUHP6EDF**		250	**37IUHP6EDP**	
	75	4	50–200	B	**36JUHP6ED**		400	**37JUHP6EDD**		400A/250V	**37JUHP6EDF**		400	**37JUHP6EDP**	
	100	5	55–250	—	—		—	—		—	—		600	**37LPSP6EDP**	
	150	5	55–250	—	**36LPUP6ED**		600	**37LPUP6EDD**		600A/250V	**37LPUP6EDF**		600	**37LPUP6EDP**	
230	7½	0	5.5–22	A1	**36CUDP2EG**		60	**37CUDP2EGD**		60A/250V	**37CUDP2EGF**		30	**37CUDP2EGP**	
	10	1	5.5–22	A1	**36DUDP2EG**		60	**37DUDP2EGD**		60A/250V	**37DUDP2EGF**		50	**37DUDP2EGP**	
	20	(1½)	10–40	A1	**36EUEP2EG**		100	**37EUEP2EGD**		100A/250V	**37EUEP2EGF**		100	**37EUEP2EGP**	
	25	2	13–52	B	**36FUFP2EG**		100	**37FUFP2EGD**		100A/250V	**37FUFP2EGF**		100	**37FUFP2EGP**	
	30	(2½)	25–100	B	**36GUGP2EG**		200	**37GUGP2EGD**		200A/250V	**37GUGP2EGF**		100	**37GUGP2EGP**	
	50	3	25–100	B	**36HUGP2EG**		200	**37HUGP2EGD**		200A/250V	**37HUGP2EGF**		150	**37HUGP2EGP**	
	60	(3½)	50–200	B	**36IUHP2EG**		200	**37IUHP2EGD**		200A/250V	**37IUHP2EGF**		250	**37IUHP2EGP**	
	75	4	50–200	B	**36JUHP2EG**		400	**37JUHP2EGD**		400A/250V	**37JUHP2EGF**		250	**37JUHP2EGP**	
	125	5	55–250	—	—		—	—		—	—		400	**37LPSP2EGP**	
	150	5	55–250	—	**36LPUP2EG**		600	**37LPUP2EGD**		600A/250V	**37LPUP2EGF**		600	**37LPUP2EGP**	
	300	6	160–630	—	**36MPXP2EG**		1200	**37MPXP2EGD**		1200A/250V	**37MPXP2EGF**		1200	**37MPXP2EGP**	
460	10	0	5.5–22	A1	**36CUDP4EH**		30	**37CUDP4EHD**		30A/600V	**37CUDP4EHF**		30	**37CUDP4EHP**	
	15	1	5.5–22	A1	**36DUDP4EH**		60	**37DUDP4EHD**		60A/600V	**37DUDP4EHF**		30	**37DUDP4EHP**	
	30	(1¾)	10–40	A1	**36EUEP4EH**		60	**37EUEP4EHD**		60A/600V	**37EUEP4EHF**		50	**37EUEP4EHP**	
	40	2	13–52	B	**36FUFP4EH**		100	**37FUFP4EHD**		100A/600V	**37FUFP4EHF**		100	**37FUFP4EHP**	
	60	(2½)	25–100	B	**36GUGP4EH**		200	**37GUGP4EHD**		200A/600V	**37GUGP4EHF**		100	**37GUGP4EHP**	
	75	3	25–100	B	**36HUGP4EH**		200	**37HUGP4EHD**		200A/600V	**37HUGP4EHF**		125	**37HUGP4EHP**	
	100	(3½)	50–200	B	**36IUHP4EH**		200	**37IUHP4EHD**		200A/600V	**37IUHP4EHF**		150	**37IUHP4EHP**	
	150	4	50–200	B	**36JUHP4EH**		400	**37JUHP4EHD**		400A/600V	**37JUHP4EHF**		250	**37JUHP4EHP**	
	250	5	55–250	—	—		—	—		—	—		400	**37LPSP4EHP**	
	350	5	55–250	—	**36LPUP4EH**		600	**37LPUP4EHD**		600A/600V	**37LPUP4EHF**		600	**37LPUP4EHP**	
	600	6	160–630	—	**36MPXP4EH**		1200	**37MPXP4EHD**		1200A/600V	**37MPXP4EHF**		1200	**37MPXP4EHP**	
575	10	0	5.5–22	A1	**36CUDP5EE**		30	**37CUDP5EED**		30A/600V	**37CUDP5EEF**		30	**37CUDP5EEP**	
	15	1	5.5–22	A1	**36DUDP5EE**		60	**37DUDP5EED**		60A/600V	**37DUDP5EEF**		30	**37DUDP5EEP**	
	30	(1¾)	10–40	A1	**36EUEP5EE**		60	**37EUEP5EED**		60A/600V	**37EUEP5EEF**		50	**37EUEP5EEP**	
	40	2	13–52	B	**36FUFP5EE**		60	**37FUFP5EED**		60A/600V	**37FUFP5EEF**		50	**37FUFP5EEP**	
	60	(2½)	25–100	B	**36GUGP5EE**		100	**37GUGP5EED**		100A/600V	**37GUGP5EEF**		100	**37GUGP5EEP**	
	75	3	25–100	B	**36HUGP5EE**		200	**37HUGP5EED**		200A/600V	**37HUGP5EEF**		125	**37HUGP5EEP**	
	100	(3½)	50–200	B	**36IUHP5EE**		400	**37IUHP5EED**		400A/600V	**37IUHP5EEF**		150	**37IUHP5EEP**	
	150	4	50–200	B	**36JUHP5EE**		400	**37JUHP5EED**		400A/600V	**37JUHP5EEF**		250	**37JUHP5EEP**	
	250	5	55–250	—	—		—	—		400A/600V	**37LPSP5EEF**		—	—	
	350	5	55–250	—	**36LPUP5EE**		600	**37LPUP5EED**		600A/600V	**37LPUP5EEF**		400	**37LPUP5EEP**	
	600	6	160–630	—	**36MPXP5EE**		1200	**37MPXP5EED**		1200A/600V	**37MPXP5EEF**		1200	**37MPXP5EEP**	

Note: All starter sizes carry one maximum Hp rating (per the National Electric Code).

2 Step Part Winding with Solid State Overload, Class 36 & 37

Selection

Ordering Information

- Field Modification Kits see page 9/104.
- Factory Modifications see page 9/119.
- Dimensions see page page 9/167.
- Wiring Diagrams see page 9/180.
- Replacement Parts see page 9/131.

Coil and Control Voltage

The coil voltage will always match the motor voltage. As standard, a CPT is supplied and 120V control voltage is utilized. To change to 120V voltage (CPT not supplied), change the 9th character to "F". To change to 24VAC voltage (CPT not supplied), change the 9th character to "J".

NEMA 4/4X Stainless Steel Enclosures

			Overload Relay		Non-Combination		Combination Non-Fusible Disconnect			Combination Fusible Disconnect		Combination Circit Breaker		
Motor Voltage	Max Hp	NEMA Size (1/2 Size)	Amp Range	Frame Size	Catalog Number	List Price $	Disc. Amp Rating	Catalog Number	List Price $	Fuse Clip Amp/Volt Rating	Catalog Number	Circuit Breaker Amps	Catalog Number	List Price $
200	7½	0	5.5–22	A1	**36CUDP6WD**		60	**37CUDP6WDD**		60A/250V	**37CUDP6WDF**	30	**37CUDP6WDP**	
	10	1	5.5–22	A1	**36DUDP6WD**		60	**37DUDP6WDD**		60A/250V	**37DUDP6WDF**	50	**37DUDP6WDP**	
	15	(1¾)	10–40	A1	**36EUEP6WD**		100	**37EUEP6WDD**		100A/250V	**37EUEP6WDF**	100	**37EUEP6WDP**	
	20	2	13–52	B	**36FUFP6WD**		100	**37FUFP6WDD**		100A/250V	**37FUFP6WDF**	100	**37FUFP6WDP**	
	30	(2½)	25–100	B	**36GUGP6WD**		200	**37GUGP6WDD**		200A/250V	**37GUGP6WDF**	125	**37GUGP6WDP**	
	40	3	25–100	B	**36HUGP6WD**		200	**37HUGP6WDD**		200A/250V	**37HUGP6WDF**	150	**37HUGP6WDP**	
	50	(3½)	50–200	B	**36IUHP6WD**		200	**37IUHP6WDD**		200A/250V	**37IUHP6WDF**	250	**37IUHP6WDP**	
	75	4	50–200	B	**36JUHP6WD**		400	**37JUHP6WDD**		400A/250V	**37JUHP6WDF**	400	**37JUHP6WDP**	
230	7½	0	5.5–22	A1	**36CUDP2WG**		60	**37CUDP2WGD**		60A/250V	**37CUDP2WGF**	30	**37CUDP2WGP**	
	10	1	5.5–22	A1	**36DUDP2WG**		60	**37DUDP2WGD**		60A/250V	**37DUDP2WGF**	50	**37DUDP2WGP**	
	20	(1½)	10–40	A1	**36EUEP2WG**		100	**37EUEP2WGD**		100A/250V	**37EUEP2WGF**	100	**37EUEP2WGP**	
	25	2	13–52	B	**36FUFP2WG**		100	**37FUFP2WGD**		100A/250V	**37FUFP2WGF**	100	**37FUFP2WGP**	
	30	(2½)	25–100	B	**36GUGP2WG**		200	**37GUGP2WGD**		200A/250V	**37GUGP2WGF**	100	**37GUGP2WGP**	
	50	3	25–100	B	**36HUGP2WG**		200	**37HUGP2WGD**		200A/250V	**37HUGP2WGF**	150	**37HUGP2WGP**	
	60	(3½)	50–200	B	**36IUHP2WG**		200	**37IUHP2WGD**		200A/250V	**37IUHP2WGF**	250	**37IUHP2WGP**	
	75	4	50–200	B	**36JUHP2WG**		400	**37JUHP2WGD**		400A/250V	**37JUHP2WGF**	250	**37JUHP2WGP**	
460	10	0	5.5–22	A1	**36CUDP4WH**		30	**37CUDP4WHD**		30A/600V	**37CUDP4WHF**	30	**37CUDP4WHP**	
	15	1	5.5–22	A1	**36DUDP4WH**		60	**37DUDP4WHD**		60A/600V	**37DUDP4WHF**	30	**37DUDP4WHP**	
	30	(1¾)	10–40	A1	**36EUEP4WH**		60	**37EUEP4WHD**		60A/600V	**37EUEP4WHF**	50	**37EUEP4WHP**	
	40	2	13–52	B	**36FUFP4WH**		100	**37FUFP4WHD**		100A/600V	**37FUFP4WHF**	100	**37FUFP4WHP**	
	60	(2½)	25–100	B	**36GUGP4WH**		200	**37GUGP4WHD**		200A/600V	**37GUGP4WHF**	100	**37GUGP4WHP**	
	75	3	25–100	B	**36HUGP4WH**		200	**37HUGP4WHD**		200A/600V	**37HUGP4WHF**	125	**37HUGP4WHP**	
	100	(3½)	50–200	B	**36IUHP4WH**		200	**37IUHP4WHD**		200A/600V	**37IUHP4WHF**	150	**37IUHP4WHP**	
	150	4	50–200	B	**36JUHP4WH**		400	**37JUHP4WHD**		400A/600V	**37JUHP4WHF**	250	**37JUHP4WHP**	
575	10	0	5.5–22	A1	**36CUDP5WE**		30	**37CUDP5WED**		30A/600V	**37CUDP5WEF**	30	**37CUDP5WEP**	
	15	1	5.5–22	A1	**36DUDP5WE**		60	**37DUDP5WED**		60A/600V	**37DUDP5WEF**	30	**37DUDP5WEP**	
	30	(1¾)	10–40	A1	**36EUEP5WE**		60	**37EUEP5WED**		60A/600V	**37EUEP5WEF**	50	**37EUEP5WEP**	
	40	2	13–52	B	**36FUFP5WE**		60	**37FUFP5WED**		60A/600V	**37FUFP5WEF**	50	**37FUFP5WEP**	
	60	(2½)	25–100	B	**36GUGP5WE**		100	**37GUGP5WED**		100A/600V	**37GUGP5WEF**	100	**37GUGP5WEP**	
	75	3	25–100	B	**36HUGP5WE**		200	**37HUGP5WED**		200A/600V	**37HUGP5WEF**	125	**37HUGP5WEP**	
	100	(3½)	50–200	B	**36IUHP5WE**		400	**37IUHP5WED**		400A/600V	**37IUHP5WEF**	150	**37IUHP5WEP**	
	150	4	50–200	B	**36JUHP5WE**		400	**37JUHP5WED**		400A/600V	**37JUHP5WEF**	250	**37JUHP5WEP**	

Note: All starter sizes carry one maximum Hp rating (per the National Electric Code).

2 Step Part Winding with Solid State Overload, Class 36 & 37

Selection

Ordering Information

- Field Modification Kits see page 9/104.
- Factory Modifications see page 9/119.
- Dimensions see page page 9/167.
- Wiring Diagrams see page 9/180.
- Replacement Parts see page 9/131.

Coil and Control Voltage

The coil voltage will always match the motor voltage. As standard, a CPT is supplied and 120V control voltage is utilized. To change to 120V voltage (CPT not supplied), change the 9th character to "F". To change to 24VAC voltage (CPT not supplied), change the 9th character to "J".

NEMA 12, NEMA 3/3R

			Overload Relay		Non-Combination		Combination Non-Fusible Disconnect			Call Combination Fusible Disconnect Call			Combination Circit Breaker		
Motor Voltage	Max Hp	NEMA Size (1/2 Size)	Amp Range	Frame Size	Catalog Number	List Price $	Disc. Amp Rating	Catalog Number	List Price $	Fuse Clip Amp/Volt Rating	Catalog Number	List Price $	Circuit Breaker Amps	Catalog Number	List Price $
200	7½	0	5.5–22	A1	**36CUDP6ND**		60	**37CUDP6NDD**		60A/250V	**37CUDP6NDF**		30	**37CUDP6NDP**	
	10	1	5.5–22	A1	**36DUDP6ND**		60	**37DUDP6NDD**		60A/250V	**37DUDP6NDF**		50	**37DUDP6NDP**	
	15	(1¾)	10–40	A1	**36EUEP6ND**		100	**37EUEP6NDD**		100A/250V	**37EUEP6NDF**		100	**37EUEP6NDP**	
	20	2	13–52	B	**36FUFP6ND**		100	**37FUFP6NDD**		100A/250V	**37FUFP6NDF**		100	**37FUFP6NDP**	
	30	(2½)	25–100	B	**36GUGP6ND**		200	**37GUGP6NDD**		200A/250V	**37GUGP6NDF**		125	**37GUGP6NDP**	
	40	3	25–100	B	**36HUGP6ND**		200	**37HUGP6NDD**		200A/250V	**37HUGP6NDF**		150	**37HUGP6NDP**	
	50	(3½)	50–200	B	**36IUHP6ND**		200	**37IUHP6NDD**		200A/250V	**37IUHP6NDF**		250	**37IUHP6NDP**	
	75	4	50–200	B	**36JUHP6ND**		400	**37JUHP6NDD**		400A/250V	**37JUHP6NDF**		400	**37JUHP6NDP**	
	100	5	55–250	—	—		—	—		—	—		600	**37LPSP6NDP**	
	150	5	55–250	—	**36LPUP6ND**		600	**37LPUP6NDD**		600A/250V	**37LPUP6NDF**		600	**37LPUP6NDP**	
230	7½	0	5.5–22	A1	**36CUDP2NG**		60	**37CUDP2NGD**		60A/250V	**37CUDP2NGF**		30	**37CUDP2NGP**	
	10	1	5.5–22	A1	**36DUDP2NG**		60	**37DUDP2NGD**		60A/250V	**37DUDP2NGF**		50	**37DUDP2NGP**	
	20	(1½)	10–40	A1	**36EUEP2NG**		100	**37EUEP2NGD**		100A/250V	**37EUEP2NGF**		100	**37EUEP2NGP**	
	25	2	13–52	B	**36FUFP2NG**		100	**37FUFP2NGD**		100A/250V	**37FUFP2NGF**		100	**37FUFP2NGP**	
	30	(2½)	25–100	B	**36GUGP2NG**		200	**37GUGP2NGD**		200A/250V	**37GUGP2NGF**		100	**37GUGP2NGP**	
	50	3	25–100	B	**36HUGP2NG**		200	**37HUGP2NGD**		200A/250V	**37HUGP2NGF**		150	**37HUGP2NGP**	
	60	(3½)	50–200	B	**36IUHP2NG**		200	**37IUHP2NGD**		200A/250V	**37IUHP2NGF**		250	**37IUHP2NGP**	
	75	4	50–200	B	**36JUHP2NG**		400	**37JUHP2NGD**		400A/250V	**37JUHP2NGF**		250	**37JUHP2NGP**	
	125	5	55–250	—	—		—	—		—	—		400	**37LPSP2NGP**	
	150	5	55–250	—	**36LPUP2NG**		600	**37LPUP2NGD**		600A/250V	**37LPUP2NGF**		600	**37LPUP2NGP**	
	300	6	160–630	—	**36MPXP2NG**		1200	**37MPXP2NGD**		1200A/250V	**37MPXP2NGF**		1200	**37MPXP2NGP**	
460	10	0	5.5–22	A1	**36CUDP4NH**		30	**37CUDP4NHD**		30A/600V	**37CUDP4NHF**		30	**37CUDP4NHP**	
	15	1	5.5–22	A1	**36DUDP4NH**		60	**37DUDP4NHD**		60A/600V	**37DUDP4NHF**		30	**37DUDP4NHP**	
	30	(1¾)	10–40	A1	**36EUEP4NH**		60	**37EUEP4NHD**		60A/600V	**37EUEP4NHF**		50	**37EUEP4NHP**	
	40	2	13–52	B	**36FUFP4NH**		100	**37FUFP4NHD**		100A/600V	**37FUFP4NHF**		100	**37FUFP4NHP**	
	60	(2½)	25–100	B	**36GUGP4NH**		200	**37GUGP4NHD**		200A/600V	**37GUGP4NHF**		100	**37GUGP4NHP**	
	75	3	25–100	B	**36HUGP4NH**		200	**37HUGP4NHD**		200A/600V	**37HUGP4NHF**		125	**37HUGP4NHP**	
	100	(3½)	50–200	B	**36IUHP4NH**		200	**37IUHP4NHD**		200A/600V	**37IUHP4NHF**		150	**37IUHP4NHP**	
	150	4	50–200	B	**36JUHP4NH**		400	**37JUHP4NHD**		400A/600V	**37JUHP4NHF**		250	**37JUHP4NHP**	
	250	5	55–250	—	—		—	—		—	—		400	**37LPSP4NHP**	
	350	5	55–250	—	**36LPUP4NH**		600	**37LPUP4NHD**		600A/600V	**37LPUP4NHF**		600	**37LPUP4NHP**	
	600	6	160–630	—	**36MPXP4NH**		1200	**37MPXP4NHD**		1200A/600V	**37MPXP4NHF**		1200	**37MPXP4NHP**	
575	10	0	5.5–22	A1	**36CUDP5NE**		30	**37CUDP5NED**		30A/600V	**37CUDP5NEF**		30	**37CUDP5NEP**	
	15	1	5.5–22	A1	**36DUDP5NE**		60	**37DUDP5NED**		60A/600V	**37DUDP5NEF**		30	**37DUDP5NEP**	
	30	(1¾)	10–40	A1	**36EUEP5NE**		60	**37EUEP5NED**		60A/600V	**37EUEP5NEF**		50	**37EUEP5NEP**	
	40	2	13–52	B	**36FUFP5NE**		60	**37FUFP5NED**		60A/600V	**37FUFP5NEF**		50	**37FUFP5NEP**	
	60	(2½)	25–100	B	**36GUGP5NE**		100	**37GUGP5NED**		100A/600V	**37GUGP5NEF**		100	**37GUGP5NEP**	
	75	3	25–100	B	**36HUGP5NE**		200	**37HUGP5NED**		200A/600V	**37HUGP5NEF**		125	**37HUGP5NEP**	
	100	(3½)	50–200	B	**36IUHP5NE**		400	**37IUHP5NED**		400A/600V	**37IUHP5NEF**		150	**37IUHP5NEP**	
	150	4	50–200	B	**36JUHP5NE**		400	**37JUHP5NED**		400A/600V	**37JUHP5NEF**		250	**37JUHP5NEP**	
	250	5	55–250	—	—		—	—		400A/600V	**37LPSP5NEF**		—	—	
	350	5	55–250	—	**36LPUP5NE**		600	**37LPUP5NED**		600A/600V	**37LPUP5NEF**		400	**37LPUP5NEP**	
	600	6	160–630	—	**36MPXP5NE**		1200	**37MPXP5NED**		1200A/600V	**37MPXP5NEF**		1200	**37MPXP5NEP**	

Note: All starter sizes carry one maximum Hp rating (per the National Electric Code).

Wye Delta, Open Transition with Solid State Overload, Class 36 & 37

Selection

Ordering Information

- Field Modification Kits see page 9/104.
- Factory Modifications see page 9/119.
- Dimensions see page 9/167.
- Wiring Diagrams see page 9/182 .
- Replacement Parts see page 9/131.

Coil and Control Voltage

The coil voltage will always match the motor voltage. As standard, a CPT is supplied and 120V control voltage is utilized. To change to 120V voltage (CPT not supplied), change the 9th character to "F". To change to 24VAC voltage (CPT not supplied), change the 9th character to "J".

NEMA 1 General Purpose Enclosures

			Overload Relay		Non-Combination		Combination Non-Fusible Disconnect			Combination Fusible Disconnect			Combination Circit Breaker		
Motor Voltage	Max Hp	NEMA Size (1/2 Size)	Amp Range	Frame Size	Catalog Number	List Price $	Disc. Amp Rating	Catalog Number	List Price $	Fuse Clip Amp/Volt Rating	Catalog Number	List Price $	Circuit Breaker Amps	Catalog Number	List Price $
200	10	1	10–40	A1	**36DUE06BD**		60	**37DUE06BDD**		60A/250V	**37DUE06BDF**		50	**37DUE06BDP**	
	15	(1¾)	10–40	A1	**36EUE06BD**		100	**37EUE06BDD**		100A/250V	**37EUE06BDF**		100	**37EUE06BDP**	
	20	2	13–52	B	**36FUF06BD**		100	**37FUF06BDD**		100A/250V	**37FUF06BDF**		100	**37FUF06BDP**	
	30	(2½)	25–100	B	**36GUG06BD**		200	**37GUG06BDD**		200A/250V	**37GUG06BDF**		125	**37GUG06BDP**	
	40	3	25–100	B	**36HUG06BD**		200	**37HUG06BDD**		200A/250V	**37HUG06BDF**		150	**37HUG06BDP**	
	50	(3½)	50–200	B	**36IUH06BD**		200	**37IUH06BDD**		200A/250V	**37IUH06BDF**		250	**37IUH06BDP**	
	60	4	50–200	B	**36JUH06BD**		400	**37JUH06BDD**		400A/250V	**37JUH06BDF**		250	**37JUH06BDP**	
	75	5	55–250	—	**36LPS06BD**		400	**37LPS06BDD**		400A/250V	**37LPS06BDF**		400	**37LPS06BDP**	
	150	5	55–250	—	**36LPU06BD**		600	**37LPU06BDD**		600A/250V	**37LPU06BDF**		600	**37LPU06BDP**	
	300	6	160–630	—	**36MPX06BD**		1200	**37MPX06BDD**		1200A/250V	**37MPX06BDF**		1200	**37MPX06BDP**	
230	10	1	10–40	A1	**36DUE02BG**		60	**37DUE02BGD**		60A/250V	**37DUE02BGF**		50	**37DUE02BGP**	
	15	(1¾)	10–40	A1	**36EUE02BG**		60	**37EUE02BGD**		60A/250V	**37EUE02BGF**		50	**37EUE02BGP**	
	25	2	13–52	B	**36FUF02BG**		100	**37FUF02BGD**		100A/250V	**37FUF02BGF**		100	**37FUF02BGP**	
	30	(2½)	25–100	B	**36GUG02BG**		200	**37GUG02BGD**		200A/250V	**37GUG02BGF**		100	**37GUG02BGP**	
	50	3	25–100	B	**36HUG02BG**		200	**37HUG02BGD**		200A/250V	**37HUG02BGF**		150	**37HUG02BGP**	
	60	(3½)	50–200	B	**36IUH02BG**		200	**37IUH02BGD**		200A/250V	**37IUH02BGF**		250	**37IUH02BGP**	
	75	4	50–200	B	**36JUH02BG**		400	**37JUH02BGD**		400A/250V	**37JUH02BGF**		250	**37JUH02BGP**	
	100	5	55–250	—	**36LPS02BG**		400	**37LPS02BGD**		400A/250V	**37LPS02BGF**		400	**37LPS02BGP**	
	150	5	55–250	—	**36LPU02BG**		600	**37LPU02BGD**		600A/250V	**37LPU02BGF**		600	**37LPU02BGP**	
	350	6	160–630	—	**36MPX02BG**		1200	**37MPX02BGD**		1200A/250V	**37MPX02BGF**		1200	**37MPX02BGP**	
460	15	1	5.5-22	A1	**36DUD04BH**		30	**37DUD04BHD**		30A/600V	**37DUD04BHF**		30	**37DUD04BHP**	
	30	(1¾)	10–40	A1	**36EUE04BH**		60	**37EUE04BHD**		60A/600V	**37EUE04BHF**		50	**37EUE04BHP**	
	40	2	13–52	B	**36FUF04BH**		100	**37FUF04BHD**		100A/600V	**37FUF04BHF**		100	**37FUF04BHP**	
	60	(2½)	25–100	B	**36GUG04BH**		200	**37GUG04BHD**		200A/600V	**37GUG04BHF**		100	**37GUG04BHP**	
	75	3	25–100	B	**36HUG04BH**		200	**37HUG04BHD**		200A/600V	**37HUG04BHF**		125	**37HUG04BHP**	
	100	(3½)	50–200	B	**36IUH04BH**		200	**37IUH04BHD**		200A/600V	**37IUH04BHF**		150	**37IUH04BHP**	
	150	4	50–200	B	**36JUH04BH**		400	**37JUH04BHD**		400A/600V	**37JUH04BHF**		250	**37JUH04BHP**	
	200	5	55–250	—	**36LPS04BH**		400	**37LPS04BHD**		400A/600V	**37LPS04BHF**		400	**37LPS04BHP**	
	300	5	55–250	—	**36LPU04BH**		600	**37LPU04BHD**		600A/600V	**37LPU04BHF**		600	**37LPU04BHP**	
	700	6	160–630	—	**36MPX04BH**		1600	**37MPX04BHD**		1600A/600V	**37MPX04BHF**		1200	**37MPX04BHP**	
575	15	1	5.5-22	A1	**36DUD05BE**		30	**37DUD05BED**		30A/600V	**37DUD05BEF**		30	**37DUD05BEP**	
	30	(1¾)	10–40	A1	**36EUE05BE**		60	**37EUE05BED**		60A/600V	**37EUE05BEF**		50	**37EUE05BEP**	
	40	2	13–52	B	**36FUF05BE**		100	**37FUF05BED**		100A/600V	**37FUF05BEF**		50	**37FUF05BEP**	
	60	(2½)	25–100	B	**36GUG05BE**		100	**37GUG05BED**		100A/600V	**37GUG05BEF**		100	**37GUG05BEP**	
	75	3	25–100	B	**36HUG05BE**		200	**37HUG05BED**		200A/600V	**37HUG05BEF**		125	**37HUG05BEP**	
	100	(3½)	50–200	B	**36IUH05BE**		200	**37IUH05BED**		200A/600V	**37IUH05BEF**		150	**37IUH05BEP**	
	150	4	50–200	B	**36JUH05BE**		400	**37JUH05BED**		400A/600V	**37JUH05BEF**		250	**37JUH05BEP**	
	200	5	55–250	—	**36LPS05BE**		400	**37LPS05BED**		400A/600V	**37LPS05BEF**		250	**37LPS05BEP**	
	300	5	55–250	—	**36LPU05BE**		600	**37LPU05BED**		600A/600V	**37LPU05BEF**		400	**37LPU05BEP**	
	700	6	160–630	—	**36MPX05BE**		1600	**37MPX05BED**		1600A/600V	**37MPX05BEF**		1600	**37MPX05BEP**	

Note: All starter sizes carry one maximum Hp rating (per the National Electric Code).

Wye Delta, Open Transition with Solid State Overload, Class 36 & 37

Selection

Ordering Information

- ► Field Modification Kits see page 9/104.
- ► Factory Modifications see page 9/119.
- ► Dimensions see page 9/167.
- ► Wiring Diagrams see page 9/182 .
- ► Replacement Parts see page 9/131.

Coil and Control Voltage

The coil voltage will always match the motor voltage. As standard, a CPT is supplied and 120V control voltage is utilized. To change to 120V voltage (CPT not supplied), change the 9th character to "F". To change to 24VAC voltage (CPT not supplied), change the 9th character to "J".

NEMA 12, NEMA 3/3R

			Overload Relay		Non-Combination		Combination Non-Fusible Disconnect			Combination Fusible Disconnect			Combination Circit Breaker		
Motor Voltage	Max Hp	NEMA Size (1/2 Size)	Amp Range	Frame Size	Catalog Number	List Price $	Disc. Amp Rating	Catalog Number	List Price $	Fuse Clip Amp/Volt Rating	Catalog Number	List Price $	Circuit Breaker Amps	Catalog Number	List Price $
200	10	1	10–40	A1	**36DUE06ND**		60	**37DUE06NDD**		60A/250V	**37DUE06NDF**		50	**37DUE06NDP**	
	15	(1¾)	10–40	A1	**36EUE06ND**		100	**37EUE06NDD**		100A/250V	**37EUE06NDF**		100	**37EUE06NDP**	
	20	2	13–52	B	**36FUF06ND**		100	**37FUF06NDD**		100A/250V	**37FUF06NDF**		100	**37FUF06NDP**	
	30	(2½)	25–100	B	**36GUG06ND**		200	**37GUG06NDD**		200A/250V	**37GUG06NDF**		125	**37GUG06NDP**	
	40	3	25–100	B	**36HUG06ND**		200	**37HUG06NDD**		200A/250V	**37HUG06NDF**		150	**37HUG06NDP**	
	50	(3½)	50–200	B	**36IUH06ND**		200	**37IUH06NDD**		200A/250V	**37IUH06NDF**		250	**37IUH06NDP**	
	60	4	50–200	B	**36JUH06ND**		400	**37JUH06NDD**		400A/250V	**37JUH06NDF**		250	**37JUH06NDP**	
	75	5	55–250	—	**36LPS06ND**		400	**37LPS06NDD**		400A/250V	**37LPS06NDF**		400	**37LPS06NDP**	
	150	5	55–250	—	**36LPU06ND**		600	**37LPU06NDD**		600A/250V	**37LPU06NDF**		600	**37LPU06NDP**	
	300	6	160–630	—	**36MPX06ND**		1200	**37MPX06NDD**		1200A/250V	**37MPX06NDF**		1200	**37MPX06NDP**	
230	10	1	10–40	A1	**36DUE02NG**		60	**37DUE02NGD**		60A/250V	**37DUE02NGF**		50	**37DUE02NGP**	
	15	(1¾)	10–40	A1	**36EUE02NG**		60	**37EUE02NGD**		60A/250V	**37EUE02NGF**		50	**37EUE02NGP**	
	25	2	13–52	B	**36FUF02NG**		100	**37FUF02NGD**		100A/250V	**37FUF02NGF**		100	**37FUF02NGP**	
	30	(2½)	25–100	B	**36GUG02NG**		200	**37GUG02NGD**		200A/250V	**37GUG02NGF**		100	**37GUG02NGP**	
	50	3	25–100	B	**36HUG02NG**		200	**37HUG02NGD**		200A/250V	**37HUG02NGF**		150	**37HUG02NGP**	
	60	(3½)	50–200	B	**36IUH02NG**		200	**37IUH02NGD**		200A/250V	**37IUH02NGF**		250	**37IUH02NGP**	
	75	4	50–200	B	**36JUH02NG**		400	**37JUH02NGD**		400A/250V	**37JUH02NGF**		250	**37JUH02NGP**	
	100	5	55–250	—	**36LPS02NG**		400	**37LPS02NGD**		400A/250V	**37LPS02NGF**		400	**37LPS02NGP**	
	150	5	55–250	—	**36LPU02NG**		600	**37LPU02NGD**		600A/250V	**37LPU02NGF**		600	**37LPU02NGP**	
	350	6	160–630	—	**36MPX02NG**		1200	**37MPX02NGD**		1200A/250V	**37MPX02NGF**		1200	**37MPX02NGP**	
460	15	1	5.5-22	A1	**36DUD04NH**		30	**37DUD04NHD**		30A/600V	**37DUD04NHF**		30	**37DUD04NHP**	
	30	(1¾)	10–40	A1	**36EUE04NH**		60	**37EUE04NHD**		60A/600V	**37EUE04NHF**		50	**37EUE04NHP**	
	40	2	13–52	B	**36FUF04NH**		100	**37FUF04NHD**		100A/600V	**37FUF04NHF**		100	**37FUF04NHP**	
	60	(2½)	25–100	B	**36GUG04NH**		200	**37GUG04NHD**		200A/600V	**37GUG04NHF**		100	**37GUG04NHP**	
	75	3	25–100	B	**36HUG04NH**		200	**37HUG04NHD**		200A/600V	**37HUG04NHF**		125	**37HUG04NHP**	
	100	(3½)	50–200	B	**36IUH04NH**		200	**37IUH04NHD**		200A/600V	**37IUH04NHF**		150	**37IUH04NHP**	
	150	4	50–200	B	**36JUH04NH**		400	**37JUH04NHD**		400A/600V	**37JUH04NHF**		250	**37JUH04NHP**	
	200	5	55–250	—	**36LPS04NH**		400	**37LPS04NHD**		400A/600V	**37LPS04NHF**		400	**37LPS04NHP**	
	300	5	55–250	—	**36LPU04NH**		600	**37LPU04NHD**		600A/600V	**37LPU04NHF**		600	**37LPU04NHP**	
	700	6	160–630	—	**36MPX04NH**		1600	**37MPX04NHD**		1600A/600V	**37MPX04NHF**		1200	**37MPX04NHP**	
575	15	1	5.5-22	A1	**36DUD05NE**		30	**37DUD05NED**		30A/600V	**37DUD05NEF**		30	**37DUD05NEP**	
	30	(1¾)	10–40	A1	**36EUE05NE**		60	**37EUE05NED**		60A/600V	**37EUE05NEF**		50	**37EUE05NEP**	
	40	2	13–52	B	**36FUF05NE**		100	**37FUF05NED**		100A/600V	**37FUF05NEF**		50	**37FUF05NEP**	
	60	(2½)	25–100	B	**36GUG05NE**		100	**37GUG05NED**		100A/600V	**37GUG05NEF**		100	**37GUG05NEP**	
	75	3	25–100	B	**36HUG05NE**		200	**37HUG05NED**		200A/600V	**37HUG05NEF**		125	**37HUG05NEP**	
	100	(3½)	50–200	B	**36IUH05NE**		200	**37IUH05NED**		200A/600V	**37IUH05NEF**		150	**37IUH05NEP**	
	150	4	50–200	B	**36JUH05NE**		400	**37JUH05NED**		400A/600V	**37JUH05NEF**		250	**37JUH05NEP**	
	200	5	55–250	—	**36LPS05NE**		400	**37LPS05NED**		400A/600V	**37LPS05NEF**		250	**37LPS05NEP**	
	300	5	55–250	—	**36LPU05NE**		600	**37LPU05NED**		600A/600V	**37LPU05NEF**		400	**37LPU05NEP**	
	700	6	160–630	—	**37MPX05NF**		1600	**37MPX05NED**		1600A/600V	**37MPX05NEF**		1600	**37MPX05NEP**	

Note: All starter sizes carry one maximum Hp rating (per the National Electric Code).

Wye Delta, Open Transition with Solid State Overload, Class 36 & 37

Selection

Ordering Information

- Field Modification Kits see page 9/104.
- Factory Modifications see page 9/119.
- Dimensions see page 9/167.
- Wiring Diagrams see page 9/182 .
- Replacement Parts see page 9/131.

Coil and Control Voltage

The coil voltage will always match the motor voltage. As standard, a CPT is supplied and 120V control voltage is utilized. To change to 120V voltage (CPT not supplied), change the 9th character to "F". To change to 24VAC voltage (CPT not supplied), change the 9th character to "J".

NEMA 4/4X Stainless Steel Enclosures

			Overload Relay		Non-Combination		Combination Non-Fusible Disconnect			Combination Fusible Disconnect			Combination Circit Breaker		
Motor Voltage	Max Hp	NEMA Size (1/2 Size)	Amp Range	Frame Size	Catalog Number	List Price $	Disc. Amp Rating	Catalog Number	List Price $	Fuse Clip Amp/Volt Rating	Catalog Number	List Price $	Circuit Breaker Amps	Catalog Number	List Price $
200	10	1	10–40	A1	**36DUE06WD**		60	**37DUE06WDD**		60A/250V	**37DUE06WDF**		50	**37DUE06WDP**	
	15	(1¾)	10–40	A1	**36EUE06WD**		100	**37EUE06WDD**		100A/250V	**37EUE06WDF**		100	**37EUE06WDP**	
	20	2	13–52	B	**36FUF06WD**		100	**37FUF06WDD**		100A/250V	**37FUF06WDF**		100	**37FUF06WDP**	
	30	(2½)	25–100	B	**36GUG06WD**		200	**37GUG06WDD**		200A/250V	**37GUG06WDF**		125	**37GUG06WDP**	
	40	3	25–100	B	**36HUG06WD**		200	**37HUG06WDD**		200A/250V	**37HUG06WDF**		150	**37HUG06WDP**	
	50	(3½)	50–200	B	**36IUH06WD**		200	**37IUH06WDD**		200A/250V	**37IUH06WDF**		250	**37IUH06WDP**	
	60	4	50–200	B	**36JUH06WD**		400	**37JUH06WDD**		400A/250V	**37JUH06WDF**		250	**37JUH06WDP**	
230	10	1	10–40	A1	**36DUE02WG**		60	**37DUE02WGD**		60A/250V	**37DUE02WGF**		50	**37DUE02WGP**	
	15	(1¾)	10–40	A1	**36EUE02WG**		60	**37EUE02WGD**		60A/250V	**37EUE02WGF**		50	**37EUE02WGP**	
	25	2	13–52	B	**36FUF02WG**		100	**37FUF02WGD**		100A/250V	**37FUF02WGF**		100	**37FUF02WGP**	
	30	(2½)	25–100	B	**36GUG02WG**		200	**37GUG02WGD**		200A/250V	**37GUG02WGF**		100	**37GUG02WGP**	
	50	3	25–100	B	**36HUG02WG**		200	**37HUG02WGD**		200A/250V	**37HUG02WGF**		150	**37HUG02WGP**	
	60	(3½)	50–200	B	**36IUH02WG**		200	**37IUH02WGD**		200A/250V	**37IUH02WGF**		250	**37IUH02WGP**	
	75	4	50–200	B	**36JUH02WG**		400	**37JUH02WGD**		400A/250V	**37JUH02WGF**		250	**37JUH02WGP**	
460	15	1	5.5-22	A1	**36DUD04WH**		30	**37DUD04WHD**		30A/600V	**37DUD04WHF**		30	**37DUD04WHP**	
	30	(1¾)	10–40	A1	**36EUE04WH**		60	**37EUE04WHD**		60A/600V	**37EUE04WHF**		50	**37EUE04WHP**	
	40	2	13–52	B	**36FUF04WH**		100	**37FUF04WHD**		100A/600V	**37FUF04WHF**		100	**37FUF04WHP**	
	60	(2½)	25–100	B	**36GUG04WH**		200	**37GUG04WHD**		200A/600V	**37GUG04WHF**		100	**37GUG04WHP**	
	75	3	25–100	B	**36HUG04WH**		200	**37HUG04WHD**		200A/600V	**37HUG04WHF**		125	**37HUG04WHP**	
	100	(3½)	50–200	B	**36IUH04WH**		200	**37IUH04WHD**		200A/600V	**37IUH04WHF**		150	**37IUH04WHP**	
	150	4	50–200	B	**36JUH04WH**		400	**37JUH04WHD**		400A/600V	**37JUH04WHF**		250	**37JUH04WHP**	
575	15	1	5.5-22	A1	**36DUD05WE**		30	**37DUD05WED**		30A/600V	**37DUD05WEF**		30	**37DUD05WEP**	
	30	(1¾)	10–40	A1	**36EUE05WE**		60	**37EUE05WED**		60A/600V	**37EUE05WEF**		50	**37EUE05WEP**	
	40	2	13–52	B	**36FUF05WE**		100	**37FUF05WED**		100A/600V	**37FUF05WEF**		50	**37FUF05WEP**	
	60	(2½)	25–100	B	**36GUG05WE**		100	**37GUG05WED**		100A/600V	**37GUG05WEF**		100	**37GUG05WEP**	
	75	3	25–100	B	**36HUG05WE**		200	**37HUG05WED**		200A/600V	**37HUG05WEF**		125	**37HUG05WEP**	
	100	(3½)	50–200	B	**36IUH05WE**		200	**37IUH05WED**		200A/600V	**37IUH05WEF**		150	**37IUH05WEP**	
	150	4	50–200	B	**36JUH05WE**		400	**37JUH05WED**		400A/600V	**37JUH05WEF**		250	**37JUH05WEP**	

Note: All starter sizes carry one maximum Hp rating (per the National Electric Code).

Wye Delta, Open Transition with Solid State Overload, Class 36 & 37

Selection

Ordering Information

- ► Field Modification Kits see page 9/104.
- ► Factory Modifications see page 9/119.
- ► Dimensions see page 9/167.
- ► Wiring Diagrams see page 9/182 .
- ► Replacement Parts see page 9/131.

Coil and Control Voltage

The coil voltage will always match the motor voltage. As standard, a CPT is supplied and 120V control voltage is utilized. To change to 120V voltage (CPT not supplied), change the 9th character to "F". To change to 24VAC voltage (CPT not supplied), change the 9th character to "J".

NEMA 12 Enclosures (Supplied as NEMA 12, field convertible to 3/3R)①

			Overload Relay		Non-Combination		Combination Non-Fusible Disconnect			Combination Fusible Disconnect			Combination Circit Breaker		
Motor Voltage	Max Hp	NEMA Size (1/2 Size)	Amp Range	Frame Size	Catalog Number	List Price $	Disc. Amp Rating	Catalog Number	List Price $	Fuse Clip Amp/Volt Rating	Catalog Number	List Price $	Circuit Breaker Amps	Catalog Number	List Price $
200	10	1	10–40	A1	**36DUE06ND**		60	**37DUE06NDD**		60A/250V	**37DUE06NDF**		50	**37DUE06NDP**	
	15	(1¾)	10–40	A1	**36EUE06ND**		100	**37EUE06NDD**		100A/250V	**37EUE06NDF**		100	**37EUE06NDP**	
	20	2	13–52	B	**36FUF06ND**		100	**37FUF06NDD**		100A/250V	**37FUF06NDF**		100	**37FUF06NDP**	
	30	(2½)	25–100	B	**36GUG06ND**		200	**37GUG06NDD**		200A/250V	**37GUG06NDF**		125	**37GUG06NDP**	
	40	3	25–100	B	**36HUG06ND**		200	**37HUG06NDD**		200A/250V	**37HUG06NDF**		150	**37HUG06NDP**	
	50	(3½)	50–200	B	**36IUH06ND**		200	**37IUH06NDD**		200A/250V	**37IUH06NDF**		250	**37IUH06NDP**	
	60	4	50–200	B	**36JUH06ND**		400	**37JUH06NDD**		400A/250V	**37JUH06NDF**		250	**37JUH06NDP**	
	75	5	55–250	—	**36LPS06ND**		400	**37LPS06NDD**		400A/250V	**37LPS06NDF**		400	**37LPS06NDP**	
	150	5	55–250	—	**36LPU06ND**		600	**37LPU06NDD**		600A/250V	**37LPU06NDF**		600	**37LPU06NDP**	
	300	6	160–630	—	**36MPX06ND**		1200	**37MPX06NDD**		1200A/250V	**37MPX06NDF**		1200	**37MPX06NDP**	
230	10	1	10–40	A1	**36DUE02NG**		60	**37DUE02NGD**		60A/250V	**37DUE02NGF**		50	**37DUE02NGP**	
	15	(1¾)	10–40	A1	**36EUE02NG**		60	**37EUE02NGD**		60A/250V	**37EUE02NGF**		50	**37EUE02NGP**	
	25	2	13–52	B	**36FUF02NG**		100	**37FUF02NGD**		100A/250V	**37FUF02NGF**		100	**37FUF02NGP**	
	30	(2½)	25–100	B	**36GUG02NG**		200	**37GUG02NGD**		200A/250V	**37GUG02NGF**		100	**37GUG02NGP**	
	50	3	25–100	B	**36HUG02NG**		200	**37HUG02NGD**		200A/250V	**37HUG02NGF**		150	**37HUG02NGP**	
	60	(3½)	50–200	B	**36IUH02NG**		200	**37IUH02NGD**		200A/250V	**37IUH02NGF**		250	**37IUH02NGP**	
	75	4	50–200	B	**36JUH02NG**		400	**37JUH02NGD**		400A/250V	**37JUH02NGF**		250	**37JUH02NGP**	
	100	5	55–250	—	**36LPS02NG**		400	**37LPS02NGD**		400A/250V	**37LPS02NGF**		400	**37LPS02NGP**	
	150	5	55–250	—	**36LPU02NG**		600	**37LPU02NGD**		600A/250V	**37LPU02NGF**		600	**37LPU02NGP**	
	350	6	160–630	—	**36MPX02NG**		1200	**37MPX02NGD**		1200A/250V	**37MPX02NGF**		1200	**37MPX02NGP**	
460	15	1	5.5-22	A1	**36DUD04NH**		30	**37DUD04NHD**		30A/600V	**37DUD04NHF**		30	**37DUD04NHP**	
	30	(1¾)	10–40	A1	**36EUE04NH**		60	**37EUE04NHD**		60A/600V	**37EUE04NHF**		50	**37EUE04NHP**	
	40	2	13–52	B	**36FUF04NH**		100	**37FUF04NHD**		100A/600V	**37FUF04NHF**		100	**37FUF04NHP**	
	60	(2½)	25–100	B	**36GUG04NH**		200	**37GUG04NHD**		200A/600V	**37GUG04NHF**		100	**37GUG04NHP**	
	75	3	25–100	B	**36HUG04NH**		200	**37HUG04NHD**		200A/600V	**37HUG04NHF**		125	**37HUG04NHP**	
	100	(3½)	50–200	B	**36IUH04NH**		200	**37IUH04NHD**		200A/600V	**37IUH04NHF**		150	**37IUH04NHP**	
	150	4	50–200	B	**36JUH04NH**		400	**37JUH04NHD**		400A/600V	**37JUH04NHF**		250	**37JUH04NHP**	
	200	5	55–250	—	**36LPS04NH**		400	**37LPS04NHD**		400A/600V	**37LPS04NHF**		400	**37LPS04NHP**	
	300	5	55–250	—	**36LPU04NH**		600	**37LPU04NHD**		600A/600V	**37LPU04NHF**		600	**37LPU04NHP**	
	700	6	160–630	—	**36MPX04NH**		1600	**37MPX04NHD**		1600A/600V	**37MPX04NHF**		1200	**37MPX04NHP**	
575	15	1	5.5-22	A1	**36DUD05NE**		30	**37DUD05NED**		30A/600V	**37DUD05NEF**		30	**37DUD05NEP**	
	30	(1¾)	10–40	A1	**36EUE05NE**		60	**37EUE05NED**		60A/600V	**37EUE05NEF**		50	**37EUE05NEP**	
	40	2	13–52	B	**36FUF05NE**		100	**37FUF05NED**		100A/600V	**37FUF05NEF**		50	**37FUF05NEP**	
	60	(2½)	25–100	B	**36GUG05NE**		100	**37GUG05NED**		100A/600V	**37GUG05NEF**		100	**37GUG05NEP**	
	75	3	25–100	B	**36HUG05NE**		200	**37HUG05NED**		200A/600V	**37HUG05NEF**		125	**37HUG05NEP**	
	100	(3½)	50–200	B	**36IUH05NE**		200	**37IUH05NED**		200A/600V	**37IUH05NEF**		150	**37IUH05NEP**	
	150	4	50–200	B	**36JUH05NE**		400	**37JUH05NED**		400A/600V	**37JUH05NEF**		250	**37JUH05NEP**	
	200	5	55–250	—	**36LPS05NE**		400	**37LPS05NED**		400A/600V	**37LPS05NEF**		250	**37LPS05NEP**	
	300	5	55–250	—	**36LPU05NE**		600	**37LPU05NED**		600A/600V	**37LPU05NEF**		400	**37LPU05NEP**	
	700	6	160–630	—	**37MPX05NF**		1600	**37MPX05NED**		1600A/600V	**37MPX05NEF**		1600	**37MPX05NEP**	

Note: All starter sizes carry one maximum Hp rating (per the National Electric Code).

① See page 9/110 for conduit hubs and conversion instructions.

Wye Delta, Closed Transition with Solid State Overload, Class 36 & 37

Selection

Ordering Information

- ► Field Modification Kits see page 9/104.
- ► Factory Modifications see page 9/119.
- ► Dimensions see page 9/167.
- ► Wiring Diagrams see page 9/183.
- ► Replacement Parts see page 9/131.

Coil and Control Voltage

The coil voltage will always match the motor voltage. As standard, a CPT is supplied and 120V control voltage is utilized. To change to 120V voltage (CPT not supplied), change the 9th character to "F". To change to 24VAC voltage (CPT not supplied), change the 9th character to "J".

NEMA 1 General Purpose Enclosures

			Overload Relay		Non-Combination		Combination Non-Fusible Disconnect			Combination Fusible Disconnect			Combination Circit Breaker		
Motor Voltage	Max Hp	NEMA Size (1/2 Size)	Amp Range	Frame Size	Catalog Number	List Price $	Disc. Amp Rating	Catalog Number	List Price $	Fuse Clip Amp/Volt Rating	Catalog Number	List Price $	Circuit Breaker Amps	Catalog Number	List Price $
200	10	1	10–40	A1	**36DUEC6BD**		60	**37DUEC6BDD**		60A/250V	**37DUEC6BDF**		50	**37DUEC6BDP**	
	15	(1¾)	10–40	A1	**36EUEC6BD**		100	**37EUEC6BDD**		100A/250V	**37EUEC6BDF**		100	**37EUEC6BDP**	
	20	2	13–52	B	**36FUFC6BD**		100	**37FUFC6BDD**		100A/250V	**37FUFC6BDF**		100	**37FUFC6BDP**	
	30	(2½)	25–100	B	**36GUGC6BD**		200	**37GUGC6BDD**		200A/250V	**37GUGC6BDF**		125	**37GUGC6BDP**	
	40	3	25–100	B	**36HUGC6BD**		200	**37HUGC6BDD**		200A/250V	**37HUGC6BDF**		150	**37HUGC6BDP**	
	50	(3½)	50–200	B	**36IUHC6BD**		200	**37IUHC6BDD**		200A/250V	**37IUHC6BDF**		250	**37IUHC6BDP**	
	60	4	50–200	B	**36JUHC6BD**		400	**37JUHC6BDD**		400A/250V	**37JUHC6BDF**		250	**37JUHC6BDP**	
	75	5	55–250	—	**36LPSC6BD**		400	**37LPSC6BDD**		400A/250V	**37LPSC6BDF**		400	**37LPSC6BDP**	
	150	5	55–250	—	**36LPUC6BD**		600	**37LPUC6BDD**		600A/250V	**37LPUC6BDF**		600	**37LPUC6BDP**	
	300	6	160–630	—	**36MPXC6BD**		1200	**37MPXC6BDD**		1200A/250V	**37MPXC6BDF**		1200	**37MPXC6BDP**	
230	10	1	10–40	A1	**36DUEC2BG**		60	**37DUEC2BGD**		60A/250V	**37DUEC2BGF**		50	**37DUEC2BGP**	
	15	(1¾)	10–40	A1	**36EUEC2BG**		60	**37EUEC2BGD**		60A/250V	**37EUEC2BGF**		50	**37EUEC2BGP**	
	25	2	13–52	B	**36FUFC2BG**		100	**37FUFC2BGD**		100A/250V	**37FUFC2BGF**		100	**37FUFC2BGP**	
	30	(2½)	25–100	B	**36GUGC2BG**		200	**37GUGC2BGD**		200A/250V	**37GUGC2BGF**		100	**37GUGC2BGP**	
	50	3	25–100	B	**36HUGC2BG**		200	**37HUGC2BGD**		200A/250V	**37HUGC2BGF**		150	**37HUGC2BGP**	
	60	(3½)	50–200	B	**36IUHC2BG**		200	**37IUHC2BGD**		200A/250V	**37IUHC2BGF**		250	**37IUHC2BGP**	
	75	4	50–200	B	**36JUHC2BG**		400	**37JUHC2BGD**		400A/250V	**37JUHC2BGF**		250	**37JUHC2BGP**	
	100	5	55–250	—	**36LPSC2BG**		400	**37LPSC2BGD**		400A/250V	**37LPSC2BGF**		400	**37LPSC2BGP**	
	150	5	55–250	—	**36LPUC2BG**		600	**37LPUC2BGD**		600A/250V	**37LPUC2BGF**		600	**37LPUC2BGP**	
	350	6	160–630	—	**36MPXC2BG**		1200	**37MPXC2BGD**		1200A/250V	**37MPXC2BGF**		1200	**37MPXC2BGP**	
460	15	1	5.5-22	A1	**36DUDC4BH**		30	**37DUDC4BHD**		30A/600V	**37DUDC4BHF**		30	**37DUDC4BHP**	
	30	(1¾)	10–40	A1	**36EUEC4BH**		60	**37EUEC4BHD**		60A/600V	**37EUEC4BHF**		50	**37EUEC4BHP**	
	40	2	13–52	B	**36FUFC4BH**		100	**37FUFC4BHD**		100A/600V	**37FUFC4BHF**		100	**37FUFC4BHP**	
	60	(2½)	25–100	B	**36GUGC4BH**		200	**37GUGC4BHD**		200A/600V	**37GUGC4BHF**		100	**37GUGC4BHP**	
	75	3	25–100	B	**36HUGC4BH**		200	**37HUGC4BHD**		200A/600V	**37HUGC4BHF**		125	**37HUGC4BHP**	
	100	(3½)	50–200	B	**36IUHC4BH**		200	**37IUHC4BHD**		200A/600V	**37IUHC4BHF**		150	**37IUHC4BHP**	
	150	4	50–200	B	**36JUHC4BH**		400	**37JUHC4BHD**		400A/600V	**37JUHC4BHF**		250	**37JUHC4BHP**	
	200	5	55–250	—	**36LPSC4BH**		400	**37LPSC4BHD**		400A/600V	**37LPSC4BHF**		400	**37LPSC4BHP**	
	300	5	55–250	—	**36LPUC4BH**		600	**37LPUC4BHD**		600A/600V	**37LPUC4BHF**		600	**37LPUC4BHP**	
	700	6	160–630	—	**36MPXC4BH**		1600	**37MPXC4BHD**		1600A/600V	**37MPXC4BHF**		1200	**37MPXC4BHP**	
575	15	1	5.5-22	A1	**36DUDC5BE**		30	**37DUDC5BED**		30A/600V	**37DUDC5BEF**		30	**37DUDC5BEP**	
	30	(1¾)	10–40	A1	**36EUEC5BE**		60	**37EUEC5BED**		60A/600V	**37EUEC5BEF**		50	**37EUEC5BEP**	
	40	2	13–52	B	**36FUFC5BE**		100	**37FUFC5BED**		100A/600V	**37FUFC5BEF**		50	**37FUFC5BEP**	
	60	(2½)	25–100	B	**36GUGC5BE**		100	**37GUGC5BED**		100A/600V	**37GUGC5BEF**		100	**37GUGC5BEP**	
	75	3	25–100	B	**36HUGC5BE**		200	**37HUGC5BED**		200A/600V	**37HUGC5BEF**		125	**37HUGC5BEP**	
	100	(3½)	50–200	B	**36IUHC5BE**		200	**37IUHC5BED**		200A/600V	**37IUHC5BEF**		150	**37IUHC5BEP**	
	150	4	50–200	B	**36JUHC5BE**		400	**37JUHC5BED**		400A/600V	**37JUHC5BEF**		250	**37JUHC5BEP**	
	200	5	55–250	—	**36LPSC5BE**		400	**37LPSC5BED**		400A/600V	**37LPSC5BEF**		250	**37LPSC5BEP**	
	300	5	55–250	—	**36LPUC5BE**		600	**37LPUC5BED**		600A/600V	**37LPUC5BEF**		400	**37LPUC5BEP**	
	700	6	160–630	—	**37MPXC5BF**		1600	**37MPXC5BED**		1600A/600V	**37MPXC5BEF**		1600	**37MPXC5BEP**	

Note: All starter sizes carry one maximum Hp rating (per the National Electric Code).

Wye Delta, Closed Transition with Solid State Overload, Class 36 & 37

Selection

Ordering Information

- ► Field Modification Kits see page 9/104.
- ► Factory Modifications see page 9/119.
- ► Dimensions see page 9/167.
- ► Wiring Diagrams see page 9/183.
- ► Replacement Parts see page 9/131.

Coil and Control Voltage

The coil voltage will always match the motor voltage. As standard, a CPT is supplied and 120V control voltage is utilized. To change to 120V voltage (CPT not supplied), change the 9th character to "F". To change to 24VAC voltage (CPT not supplied), change the 9th character to "J".

NEMA 4 Painted Enclosures

			Overload Relay		Non-Combination		Combination Non-Fusible Disconnect			Combination Fusible Disconnect			Combination Circit Breaker		
Motor Voltage	Max Hp	NEMA Size (1/2 Size)	Amp Range	Frame Size	Catalog Number	List Price $	Disc. Amp Rating	Catalog Number	List Price $	Fuse Clip Amp/Volt Rating	Catalog Number	List Price $	Circuit Breaker Amps	Catalog Number	List Price $
200	10	1	10–40	A1	**36DUEC6ED**		60	**37DUEC6EDD**		60A/250V	**37DUEC6EDF**		50	**37DUEC6EDP**	
	15	(1¾)	10–40	A1	**36EUEC6ED**		100	**37EUEC6EDD**		100A/250V	**37EUEC6EDF**		100	**37EUEC6EDP**	
	20	2	13–52	B	**36FUFC6ED**		100	**37FUFC6EDD**		100A/250V	**37FUFC6EDF**		100	**37FUFC6EDP**	
	30	(2½)	25–100	B	**36GUGC6ED**		200	**37GUGC6EDD**		200A/250V	**37GUGC6EDF**		125	**37GUGC6EDP**	
	40	3	25–100	B	**36HUGC6ED**		200	**37HUGC6EDD**		200A/250V	**37HUGC6EDF**		150	**37HUGC6EDP**	
	50	(3½)	50–200	B	**36IUHC6ED**		200	**37IUHC6EDD**		200A/250V	**37IUHC6EDF**		250	**37IUHC6EDP**	
	60	4	50–200	B	**36JUHC6ED**		400	**37JUHC6EDD**		400A/250V	**37JUHC6EDF**		250	**37JUHC6EDP**	
	75	5	55–250	—	**36LPSC6ED**		400	**37LPSC6EDD**		400A/250V	**37LPSC6EDF**		400	**37LPSC6EDP**	
	150	5	55–250	—	**36LPUC6ED**		600	**37LPUC6EDD**		600A/250V	**37LPUC6EDF**		600	**37LPUC6EDP**	
	300	6	160–630	—	**36MPXC6ED**		1200	**37MPXC6EDD**		1200A/250V	**37MPXC6EDF**		1200	**37MPXC6EDP**	
230	10	1	10–40	A1	**36DUEC2EG**		60	**37DUEC2EGD**		60A/250V	**37DUEC2EGF**		50	**37DUEC2EGP**	
	15	(1¾)	10–40	A1	**36EUEC2EG**		60	**37EUEC2EGD**		60A/250V	**37EUEC2EGF**		50	**37EUEC2EGP**	
	25	2	13–52	B	**36FUFC2EG**		100	**37FUFC2EGD**		100A/250V	**37FUFC2EGF**		100	**37FUFC2EGP**	
	30	(2½)	25–100	B	**36GUGC2EG**		200	**37GUGC2EGD**		200A/250V	**37GUGC2EGF**		100	**37GUGC2EGP**	
	50	3	25–100	B	**36HUGC2EG**		200	**37HUGC2EGD**		200A/250V	**37HUGC2EGF**		150	**37HUGC2EGP**	
	60	(3½)	50–200	B	**36IUHC2EG**		200	**37IUHC2EGD**		200A/250V	**37IUHC2EGF**		250	**37IUHC2EGP**	
	75	4	50–200	B	**36JUHC2EG**		400	**37JUHC2EGD**		400A/250V	**37JUHC2EGF**		250	**37JUHC2EGP**	
	100	5	55–250	—	**36LPSC2EG**		400	**37LPSC2EGD**		400A/250V	**37LPSC2EGF**		400	**37LPSC2EGP**	
	150	5	55–250	—	**36LPUC2EG**		600	**37LPUC2EGD**		600A/250V	**37LPUC2EGF**		600	**37LPUC2EGP**	
	350	6	160–630	—	**36MPXC2EG**		1200	**37MPXC2EGD**		1200A/250V	**37MPXC2EGF**		1200	**37MPXC2EGP**	
460	15	1	5.5-22	A1	**36DUDC4EH**		30	**37DUDC4EHD**		30A/600V	**37DUDC4EHF**		30	**37DUDC4EHP**	
	30	(1¾)	10–40	A1	**36EUEC4EH**		60	**37EUEC4EHD**		60A/600V	**37EUEC4EHF**		50	**37EUEC4EHP**	
	40	2	13–52	B	**36FUFC4EH**		100	**37FUFC4EHD**		100A/600V	**37FUFC4EHF**		100	**37FUFC4EHP**	
	60	(2½)	25–100	B	**36GUGC4EH**		200	**37GUGC4EHD**		200A/600V	**37GUGC4EHF**		100	**37GUGC4EHP**	
	75	3	25–100	B	**36HUGC4EH**		200	**37HUGC4EHD**		200A/600V	**37HUGC4EHF**		125	**37HUGC4EHP**	
	100	(3½)	50–200	B	**36IUHC4EH**		200	**37IUHC4EHD**		200A/600V	**37IUHC4EHF**		150	**37IUHC4EHP**	
	150	4	50–200	B	**36JUHC4EH**		400	**37JUHC4EHD**		400A/600V	**37JUHC4EHF**		250	**37JUHC4EHP**	
	200	5	55–250	—	**36LPSC4EH**		400	**37LPSC4EHD**		400A/600V	**37LPSC4EHF**		400	**37LPSC4EHP**	
	300	5	55–250	—	**36LPUC4EH**		600	**37LPUC4EHD**		600A/600V	**37LPUC4EHF**		600	**37LPUC4EHP**	
	700	6	160–630	—	**36MPXC4EH**		1600	**37MPXC4EHD**		1600A/600V	**37MPXC4EHF**		1200	**37MPXC4EHP**	
575	15	1	5.5-22	A1	**36DUDC5EE**		30	**37DUDC5EED**		30A/600V	**37DUDC5EEF**		30	**37DUDC5EEP**	
	30	(1¾)	10–40	A1	**36EUEC5EE**		60	**37EUEC5EED**		60A/600V	**37EUEC5EEF**		50	**37EUEC5EEP**	
	40	2	13–52	B	**36FUFC5EE**		100	**37FUFC5EED**		100A/600V	**37FUFC5EEF**		50	**37FUFC5EEP**	
	60	(2½)	25–100	B	**36GUGC5EE**		100	**37GUGC5EED**		100A/600V	**37GUGC5EEF**		100	**37GUGC5EEP**	
	75	3	25–100	B	**36HUGC5EE**		200	**37HUGC5EED**		200A/600V	**37HUGC5EEF**		125	**37HUGC5EEP**	
	100	(3½)	50–200	B	**36IUHC5EE**		200	**37IUHC5EED**		200A/600V	**37IUHC5EEF**		150	**37IUHC5EEP**	
	150	4	50–200	B	**36JUHC5EE**		400	**37JUHC5EED**		400A/600V	**37JUHC5EEF**		250	**37JUHC5EEP**	
	200	5	55–250	—	**36LPSC5EE**		400	**37LPSC5EED**		400A/600V	**37LPSC5EEF**		250	**37LPSC5EEP**	
	300	5	55–250	—	**36LPUC5EE**		600	**37LPUC5EED**		600A/600V	**37LPUC5EEF**		400	**37LPUC5EEP**	
	700	6	160–630	—	**37MPXC5EF**		1600	**37MPXC5EED**		1600A/600V	**37MPXC5EEF**		1600	**37MPXC5EEP**	

Note: All starter sizes carry one maximum Hp rating (per the National Electric Code).

Wye Delta, Closed Transition with Solid State Overload, Class 36 & 37

Selection

Ordering Information

- ► Field Modification Kits see page 9/104.
- ► Factory Modifications see page 9/119.
- ► Dimensions see page 9/167.
- ► Wiring Diagrams see page 9/183.
- ► Replacement Parts see page 9/131.

Coil and Control Voltage

The coil voltage will always match the motor voltage. As standard, a CPT is supplied and 120V control voltage is utilized. To change to 120V voltage (CPT not supplied), change the 9th character to "F". To change to 24VAC voltage (CPT not supplied), change the 9th character to "J".

NEMA 4/4X Stainless Steel Enclosures

			Overload Relay		Non-Combination		Combination Non-Fusible Disconnect			Combination Fusible Disconnect			Combination Circit Breaker		
Motor Voltage	Max Hp	NEMA Size (1/2 Size)	Amp Range	Frame Size	Catalog Number	List Price $	Disc. Amp Rating	Catalog Number	List Price $	Fuse Clip Amp/Volt Rating	Catalog Number	List Price $	Circuit Breaker Amps	Catalog Number	List Price $
200	10	1	10–40	A1	**36DUEC6WD**		60	**37DUEC6WDD**		60A/250V	**37DUEC6WDF**		50	**37DUEC6WDP**	
	15	(1¾)	10–40	A1	**36EUEC6WD**		100	**37EUEC6WDD**		100A/250V	**37EUEC6WDF**		100	**37EUEC6WDP**	
	20	2	13–52	B	**36FUFC6WD**		100	**37FUFC6WDD**		100A/250V	**37FUFC6WDF**		100	**37FUFC6WDP**	
	30	(2½)	25–100	B	**36GUGC6WD**		200	**37GUGC6WDD**		200A/250V	**37GUGC6WDF**		125	**37GUGC6WDP**	
	40	3	25–100	B	**36HUGC6WD**		200	**37HUGC6WDD**		200A/250V	**37HUGC6WDF**		150	**37HUGC6WDP**	
	50	(3½)	50–200	B	**36IUHC6WD**		200	**37IUHC6WDD**		200A/250V	**37IUHC6WDF**		250	**37IUHC6WDP**	
	60	4	50–200	B	**36JUHC6WD**		400	**37JUHC6WDD**		400A/250V	**37JUHC6WDF**		250	**37JUHC6WDP**	
230	10	1	10–40	A1	**36DUEC2WG**		60	**37DUEC2WGD**		60A/250V	**37DUEC2WGF**		50	**37DUEC2WGP**	
	15	(1¾)	10–40	A1	**36EUEC2WG**		60	**37EUEC2WGD**		60A/250V	**37EUEC2WGF**		50	**37EUEC2WGP**	
	25	2	13–52	B	**36FUFC2WG**		100	**37FUFC2WGD**		100A/250V	**37FUFC2WGF**		100	**37FUFC2WGP**	
	30	(2½)	25–100	B	**36GUGC2WG**		200	**37GUGC2WGD**		200A/250V	**37GUGC2WGF**		100	**37GUGC2WGP**	
	50	3	25–100	B	**36HUGC2WG**		200	**37HUGC2WGD**		200A/250V	**37HUGC2WGF**		150	**37HUGC2WGP**	
	60	(3½)	50–200	B	**36IUHC2WG**		200	**37IUHC2WGD**		200A/250V	**37IUHC2WGF**		250	**37IUHC2WGP**	
	75	4	50–200	B	**36JUHC2WG**		400	**37JUHC2WGD**		400A/250V	**37JUHC2WGF**		250	**37JUHC2WGP**	
460	15	1	5.5-22	A1	**36DUDC4WH**		30	**37DUDC4WHD**		30A/600V	**37DUDC4WHF**		30	**37DUDC4WHP**	
	30	(1¾)	10–40	A1	**36EUEC4WH**		60	**37EUEC4WHD**		60A/600V	**37EUEC4WHF**		50	**37EUEC4WHP**	
	40	2	13–52	B	**36FUFC4WH**		100	**37FUFC4WHD**		100A/600V	**37FUFC4WHF**		100	**37FUFC4WHP**	
	60	(2½)	25–100	B	**36GUGC4WH**		200	**37GUGC4WHD**		200A/600V	**37GUGC4WHF**		100	**37GUGC4WHP**	
	75	3	25–100	B	**36HUGC4WH**		200	**37HUGC4WHD**		200A/600V	**37HUGC4WHF**		125	**37HUGC4WHP**	
	100	(3½)	50–200	B	**36IUHC4WH**		200	**37IUHC4WHD**		200A/600V	**37IUHC4WHF**		150	**37IUHC4WHP**	
	150	4	50–200	B	**36JUHC4WH**		400	**37JUHC4WHD**		400A/600V	**37JUHC4WHF**		250	**37JUHC4WHP**	
575	15	1	5.5-22	A1	**36DUDC5WE**		30	**37DUDC5WED**		30A/600V	**37DUDC5WEF**		30	**37DUDC5WEP**	
	30	(1¾)	10–40	A1	**36EUEC5WE**		60	**37EUEC5WED**		60A/600V	**37EUEC5WEF**		50	**37EUEC5WEP**	
	40	2	13–52	B	**36FUFC5WE**		100	**37FUFC5WED**		100A/600V	**37FUFC5WEF**		50	**37FUFC5WEP**	
	60	(2½)	25–100	B	**36GUGC5WE**		100	**37GUGC5WED**		100A/600V	**37GUGC5WEF**		100	**37GUGC5WEP**	
	75	3	25–100	B	**36HUGC5WE**		200	**37HUGC5WED**		200A/600V	**37HUGC5WEF**		125	**37HUGC5WEP**	
	100	(3½)	50–200	B	**36IUHC5WE**		200	**37IUHC5WED**		200A/600V	**37IUHC5WEF**		150	**37IUHC5WEP**	
	150	4	50–200	B	**36JUHC5WE**		400	**37JUHC5WED**		400A/600V	**37JUHC5WEF**		250	**37JUHC5WEP**	

Note: All starter sizes carry one maximum Hp rating (per the National Electric Code).

Wye Delta, Closed Transition with Solid State Overload, Class 36 & 37

Selection

Ordering Information

- ► Field Modification Kits see page 9/104.
- ► Factory Modifications see page 9/119.
- ► Dimensions see page 9/167.
- ► Wiring Diagrams see page 9/183.
- ► Replacement Parts see page 9/131.

Coil and Control Voltage

The coil voltage will always match the motor voltage. As standard, a CPT is supplied and 120V control voltage is utilized. To change to 120V voltage (CPT not supplied), change the 9th character to "F". To change to 24VAC voltage (CPT not supplied), change the 9th character to "J".

NEMA 12, NEMA 3/3R

			Overload Relay		Non-Combination		Combination Non-Fusible Disconnect			Combination Fusible Disconnect			Combination Circit Breaker		
Motor Voltage	Max Hp	NEMA Size (1/2 Size)	Amp Range	Frame Size	Catalog Number	List Price $	Disc. Amp Rating	Catalog Number	List Price $	Fuse Clip Amp/Volt Rating	Catalog Number	List Price $	Circuit Breaker Amps	Catalog Number	List Price $
200	10	1	10–40	A1	**36DUEC6ND**		60	**37DUEC6NDD**		60A/250V	**37DUEC6NDF**		50	**37DUEC6NDP**	
	15	(1¾)	10–40	A1	**36EUEC6ND**		100	**37EUEC6NDD**		100A/250V	**37EUEC6NDF**		100	**37EUEC6NDP**	
	20	2	13–52	B	**36FUFC6ND**		100	**37FUFC6NDD**		100A/250V	**37FUFC6NDF**		100	**37FUFC6NDP**	
	30	(2½)	25–100	B	**36GUGC6ND**		200	**37GUGC6NDD**		200A/250V	**37GUGC6NDF**		125	**37GUGC6NDP**	
	40	3	25–100	B	**36HUGC6ND**		200	**37HUGC6NDD**		200A/250V	**37HUGC6NDF**		150	**37HUGC6NDP**	
	50	(3½)	50–200	B	**36IUHC6ND**		200	**37IUHC6NDD**		200A/250V	**37IUHC6NDF**		250	**37IUHC6NDP**	
	60	4	50–200	B	**36JUHC6ND**		400	**37JUHC6NDD**		400A/250V	**37JUHC6NDF**		250	**37JUHC6NDP**	
	75	5	55–250	—	**36LPSC6ND**		400	**37LPSC6NDD**		400A/250V	**37LPSC6NDF**		400	**37LPSC6NDP**	
	150	5	55–250	—	**36LPUC6ND**		600	**37LPUC6NDD**		600A/250V	**37LPUC6NDF**		600	**37LPUC6NDP**	
	300	6	160–630	—	**36MPXC6ND**		1200	**37MPXC6NDD**		1200A/250V	**37MPXC6NDF**		1200	**37MPXC6NDP**	
230	10	1	10–40	A1	**36DUEC2NG**		60	**37DUEC2NGD**		60A/250V	**37DUEC2NGF**		50	**37DUEC2NGP**	
	15	(1¾)	10–40	A1	**36EUEC2NG**		60	**37EUEC2NGD**		60A/250V	**37EUEC2NGF**		50	**37EUEC2NGP**	
	25	2	13–52	B	**36FUFC2NG**		100	**37FUFC2NGD**		100A/250V	**37FUFC2NGF**		100	**37FUFC2NGP**	
	30	(2½)	25–100	B	**36GUGC2NG**		200	**37GUGC2NGD**		200A/250V	**37GUGC2NGF**		100	**37GUGC2NGP**	
	50	3	25–100	B	**36HUGC2NG**		200	**37HUGC2NGD**		200A/250V	**37HUGC2NGF**		150	**37HUGC2NGP**	
	60	(3½)	50–200	B	**36IUHC2NG**		200	**37IUHC2NGD**		200A/250V	**37IUHC2NGF**		250	**37IUHC2NGP**	
	75	4	50–200	B	**36JUHC2NG**		400	**37JUHC2NGD**		400A/250V	**37JUHC2NGF**		250	**37JUHC2NGP**	
	100	5	55–250	—	**36LPSC2NG**		400	**37LPSC2NGD**		400A/250V	**37LPSC2NGF**		400	**37LPSC2NGP**	
	150	5	55–250	—	**36LPUC2NG**		600	**37LPUC2NGD**		600A/250V	**37LPUC2NGF**		600	**37LPUC2NGP**	
	350	6	160–630	—	**36MPXC2NG**		1200	**37MPXC2NGD**		1200A/250V	**37MPXC2NGF**		1200	**37MPXC2NGP**	
460	15	1	5.5-22	A1	**36DUDC4NH**		30	**37DUDC4NHD**		30A/600V	**37DUDC4NHF**		30	**37DUDC4NHP**	
	30	(1¾)	10–40	A1	**36EUEC4NH**		60	**37EUEC4NHD**		60A/600V	**37EUEC4NHF**		50	**37EUEC4NHP**	
	40	2	13–52	B	**36FUFC4NH**		100	**37FUFC4NHD**		100A/600V	**37FUFC4NHF**		100	**37FUFC4NHP**	
	60	(2½)	25–100	B	**36GUGC4NH**		200	**37GUGC4NHD**		200A/600V	**37GUGC4NHF**		100	**37GUGC4NHP**	
	75	3	25–100	B	**36HUGC4NH**		200	**37HUGC4NHD**		200A/600V	**37HUGC4NHF**		125	**37HUGC4NHP**	
	100	(3½)	50–200	B	**36IUHC4NH**		200	**37IUHC4NHD**		200A/600V	**37IUHC4NHF**		150	**37IUHC4NHP**	
	150	4	50–200	B	**36JUHC4NH**		400	**37JUHC4NHD**		400A/600V	**37JUHC4NHF**		250	**37JUHC4NHP**	
	200	5	55–250	—	**36LPSC4NH**		400	**37LPSC4NHD**		400A/600V	**37LPSC4NHF**		400	**37LPSC4NHP**	
	300	5	55–250	—	**36LPUC4NH**		600	**37LPUC4NHD**		600A/600V	**37LPUC4NHF**		600	**37LPUC4NHP**	
	700	6	160–630	—	**36MPXC4NH**		1600	**37MPXC4NHD**		1600A/600V	**37MPXC4NHF**		1200	**37MPXC4NHP**	
575	15	1	5.5-22	A1	**36DUDC5NE**		30	**37DUDC5NED**		30A/600V	**37DUDC5NEF**		30	**37DUDC5NEP**	
	30	(1¾)	10–40	A1	**36EUEC5NE**		60	**37EUEC5NED**		60A/600V	**37EUEC5NEF**		50	**37EUEC5NEP**	
	40	2	13–52	B	**36FUFC5NE**		100	**37FUFC5NED**		100A/600V	**37FUFC5NEF**		50	**37FUFC5NEP**	
	60	(2½)	25–100	B	**36GUGC5NE**		100	**37GUGC5NED**		100A/600V	**37GUGC5NEF**		100	**37GUGC5NEP**	
	75	3	25–100	B	**36HUGC5NE**		200	**37HUGC5NED**		200A/600V	**37HUGC5NEF**		125	**37HUGC5NEP**	
	100	(3½)	50–200	B	**36IUHC5NE**		200	**37IUHC5NED**		200A/600V	**37IUHC5NEF**		150	**37IUHC5NEP**	
	150	4	50–200	B	**36JUHC5NE**		400	**37JUHC5NED**		400A/600V	**37JUHC5NEF**		250	**37JUHC5NEP**	
	200	5	55–250	—	**36LPSC5NE**		400	**37LPSC5NED**		400A/600V	**37LPSC5NEF**		250	**37LPSC5NEP**	
	300	5	55–250	—	**36LPUC5NE**		600	**37LPUC5NED**		600A/600V	**37LPUC5NEF**		400	**37LPUC5NEP**	
	700	6	160–630	—	**37MPXC5NF**		1600	**37MPXC5NED**		1600A/600V	**37MPXC5NEF**		1600	**37MPXC5NEP**	

Note: All starter sizes carry one maximum Hp rating (per the National Electric Code).

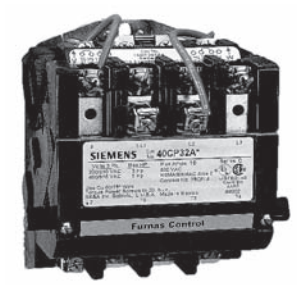

Ordering Information

- Replace the (*) with a letter from the coil table. Dual voltage coils are wired on high voltage unless specified on order.
- Field Modification Kits see page 9/104.
- Factory Modifications see page 9/119.
- Dimensions see pages 9/144 open and 9/157 enclosed.
- Wiring Diagrams see page 9/184.
- Replacement Parts see page 9/131.

Coil Table

60Hz Voltage	Letter
24	J
120	F
110–120/220–240①	A
200–208	D
220–240	G
277	L
220–240/440–480①	C
440–480	H
575–600	E

For other voltages and frequencies, see Factory Modifications page 9/119.

Open Type & Standard Width Enclosure, 3-Phase, 3-Pole

Max Hp							Enclosure											
							Open Type⑤		NEMA 1 General Purpose		NEMA 4/4X Stainless Watertight, Dust-tight Corrosion Resistant 304 Stainless Steel		NEMA 4X Fiberglass Watertight, Dust-tight Corrosion Resistant		NEMA 7 & 9 NEMA 3 & 4 Div1 and Div 2 Class I Groups C & D Class II Groups E, F & G Class III Bolted Enclosures Indoor/Outdoor Use		NEMA 12 NEMA 3/3R Industrial Use Weatherproof	
200 Volts	230 Volts	460 Volts	575 Volts	Contactor Amp Rating	NEMA Size	Half Size	Catalog Number	List Price $	Catalog Number	List Price $	Catalog Number	List Price $	Catalog Number	List Price $	Catalog Number	List Price $	Catalog Number	List Price $
1½	1½	2	2	9	00	—	40BP32A*		40BP32B*		Use Size 0	—	Use Size 0	—	Use Size 0	—	Use Size 0	—
3	3	5	5	18	0	—	40CP32A*		40CP32B*		40CP32W*		40CP32F*		40CP32H*		40CP320*	
7½	7½	10	10	27	1	—	40DP32A*		40DP32B*		40DP32W*		40DP32F*		40DP32H*		40DP320*	
10	10	15	15	40	—	1¾	40EP32A*		40EP32B*		40EP32W*		40EP32F*		40EP32H*		40EP320*	
10	15	25	25	45	2	—	40FP32A*		40FP32B*		40FP32W*		40FP32F*		40FP32H*		40FP320*	
15	20	30	30	60	—	2½	40GP32A*		40GP32B*		40GP32W*		40GP32F*		40GP32H*		40GP320*	
25	30	50	50	90	3	—	40HP32A*		40HP32B*		40HP32W*		40HP32F*		40HP32H*		40HP320*	
30	40	75	75	115	—	3½	40IP32A*		40IP32B*		40IP32W*		40IP32F*		40IP32H*		40IP320*	
40	50	100	100	135	4	—	40JG32A*		40JG32B*		40JG32W*		40JG32F*		40JG32H*		40JG320*	
75	100	200	200	270	5	—	40LP32A*		40LP32B*		40LP32E*②		—	—	40LP32H*		40LP320*	
150	200	400	400	540	6	—	40MP32A*		40MP32B*		40MP32E*②		—	—	—	—	40MP320*	
—	300	600	600	810	7③⑥	—	40NH32A*		40NH32B*		40NH32E*②		—	—	—	—	40NH320*	
—	450	900	900	1215	8④⑥	—	40PH32A*		40PH32B*		40PH32E*②		—	—	—	—	40PH320*	

Extra Wide Enclosure, 3-Phase, 3-Pole

Max Hp							Enclosure							
							NEMA 1⑤ General Purpose		NEMA 4/4X Stainless Watertight, Dust-tight Corrosion Resistant 304 Stainless Steel		NEMA 7 & 9 NEMA 3 & 4 Div 1 and Div 2 Class I Groups C & D Class II Groups E, F & G Class III Bolted Enclosures Indoor/Outdoor Use		NEMA 12 NEMA 3/3R Industrial Use Weatherproof	
200 Volts	230 Volts	460 Volts	575 Volts	Contactor Amp Range	NEMA Size	Half Size	Catalog Number	List Price $	Catalog Number	List Price $	Catalog Number	List Price $	Catalog Number	List Price $
1½	1½	2	2	9	00	—	40BP82B*		Use Size 0	—	Use Size 0	—	Use Size 0	—
3	3	5	5	18	0	—	40CP82B*		40CP82W*		40CP82H*		40CP820*	
7½	7½	10	10	27	1	—	40DP82B*		40DP82W*		40DP82H*		40DP820*	
10	10	15	15	40	—	1¾	40EP82B*		40EP82W*		40EP82H*		40EP820*	
10	15	25	25	45	2	—	40FP82B*		40FP82W*		40FP82H*		40FP820*	
15	20	30	30	60	—	2½	40GP82B*		40GP82W*		40GP82H*		40GP820*	
25	30	50	50	90	3	—	40HP82B*		40HP82W*		40HP82H*		40HP820*	
30	40	75	75	115	—	3½	40IP82B*		40IP82W*		40IP82H*		40IP820*	
40	50	100	100	135	4	—	40JG82B*		40JG82W*		40JG82H*		40JG820*	

Note: Hp's shown above are based on the overload amp range for the FLA's (per the National Electric Code) of typical industrial motors. All starter sizes carry one maximum Hp rating.

① Dual voltage coils not available in size 5-8 starters.
② Enclosure is NEMA Type 4 (painted steel).
③ Only available
F coil 100-250V AC 50/60Hz, or DC
H coil 150-500V AC 50/60Hz, or DC
④ Only available
F coil100-250V AC 50/60Hz, or DC

⑤

Standard Auxiliary Contacts			
Type	Size (3rd Character)	Configuration	Internal / External
All FVNR Starters & Contactors	B Thru E	1N.O.	Internal
	F Thru J	1N.O.	External
	L Thru M	2N.O., 2N.C.	External
	N Thru P	1N.O., 1N.C.	External

⑥ Lugs are not included, refer to page 9/108.

Single Phase, 4-Pole & Vacuum, Class 40

Selection

Ordering Information

- Replace the (*) with a letter from the coil table. Dual voltage coils are wired on high voltage unless specified on order.
- Field Modification Kits see page 9/104.
- Factory Modifications see page 9/119.
- Dimensions see pages 9/144 open and 9/157 enclosed.
- Wiring Diagrams see page 9/184.
- Replacement Parts see page 9/131.

Coil Table

60Hz Voltage	Letter
24	J
120	F
110–120/220–240①	A
200–208	D
220–240	G
277	L
220–240/440–480①	C
440–480	H
575–600	E

For other voltages and frequencies, see Factory Modifications page 9/119.

Open Type & Standard Width Enclosure, Single Phase, 2-Pole②③

Max Hp					Enclosure											
					Open Type④		NEMA 1 General Purposes		NEMA 4/4X Stainless Watertight, Dust-tight Corrosion Resistant		NEMA 4X Fiberglass Watertight, Dust-tight Corrosion Resistant 304 Stainless Steel		NEMA 7 & 9 NEMA 3 & 4 Div 1 and Div 2 Class I Groups C & D Class II Groups E, F & G Class III Bolted Enclosure Indoor/Outdoor Use		NEMA 12 NEMA 3/3R Industrial Use Weatherproof	
115 Volts	208/230 Volts	Contactor Amp Rating	NEMA Size	Half Size	Catalog No	List Price $	Catalog No	List Price $	Catalog No	List Price $	Catalog No	List Price $	Catalog No	List Price $	Catalog No	List Price $
⅓	1	9	00	—	**40BP12A***		**40BP12B***		Use Size 0	—	Use Size 0	—	Use Size 0	—	Use Size 0	—
1	2	18	0	—	**40CP12A***		**40CP12B***		**40CP12W***		**40CP12F***		**40CP12H***		**40CP120***	
2	3	27	1	—	**40DP12A***		**40DP12B***		**40DP12W***		**40DP12F***		**40DP12H***		**40DP120***	
3	5	35	1P	—	**40EP12A***		**40EP12B***		**40EP12W***		**40EP12F***		**40EP12H***		**40EP120***	
3	7½	45	2	—	**40FP12A***		**40FP12B***		**40FP12W***		**40FP12F***		**40FP12H***		**40FP120***	
5	10	60	—	2½	**40GP12A***		**40GP12B***		**40GP12W***		**40GP12F***		**40GP12H***		**40GP120***	
7½	15	90	3	—	**40HP12A***		**40HP12B***		**40HP12W***		**40HP12F***		**40HP12H***		**40HP120***	

Open Type & Standard Width Enclosure, 4-Pole

Max Hp							Enclosure											
							Open Type		NEMA 1 General Purpose		NEMA 4/4X Stainless Watertight, Dust-tight Corrosion Resistant 304 Stainless Steel		NEMA 4X Fiberglass Watertight, Dust-tight Corrosion Resistant		NEMA 7 & 9 NEMA 3 & 4 Div 1 and Div 2 Class I Groups C & D Class II Groups E, F & G Class III Bolted Enclosure Indoor/Outdoor Use		NEMA 12 NEMA 3/3R Industrial Use Weatherproof	
200 Volts	230 Volts	460 Volts	575 Volts	Contactor Amp Rating	NEMA Size	Half Size	Catalog No	List Price $	Catalog No	List Price $	Catalog No	List Price $	Catalog No	List Price $	Catalog No	List Price $	Catalog No	List Price $
⅓	1½	2	2	9	00	—	**40BP22A***		**40BP22B***		Use Size 0	—	Use Size 0	—	Use Size 0	—	Use Size 0	—
2	3	5	5	18	0	—	**40CP22A***		**40CP22B***		**40CP22W***		**40CP22F***		**40CP22H***		**40CP220***	
3	7½	10	10	27	1	—	**40DP22A***		**40DP22B***		**40DP22W***		**40DP22F***		**40DP22H***		**40DP220***	
5	10	15	15	40	—	1¾	**40EP22A***		**40EP22B***		**40EP22W***		**40EP22F***		**40EP22H***		**40EP220***	

Vacuum Contactors, 3-Phase, 3-Pole①

Max Hp				Contactor Amp Rating	NEMA Size	Open Type	
200V	230V	460V	575V			Catalog Number	List Price $
40	50	100	100	135	4	**40JV32A***	
75	100	200	200	270	5	**40LV32A***	
150	200	400	400	540	6	**40MV32A***	

Note: Hp's shown above are based on the overload amp range for the FLA's (per the National Electric Code) of typical industrial motors. All starter sizes carry one maximum Hp rating.

① Dual voltage coils not available for vacuum contactors. Refer to Page 9/119 for a complete list of available coil voltages.
② To order single phase contactor in an extra wide enclosure, order the enclosure kit from Page 9/113 and the open style contactor as separate items.
③ Coils D, F, or G will be wired for incoming voltage. J coil will be wired for separate source. Coils E, H, and L do not apply to single phase starters.
④ 1 NO Auxiliary.

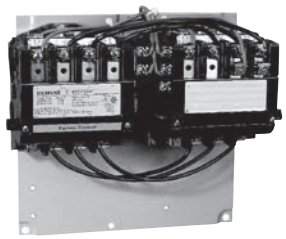

Ordering Information

- Replace the (*) with a letter from the coil table. Dual voltage coils are wired on high voltage unless specified on order.
- Field Modification Kits see page 9/104.
- Factory Modifications see page 9/119.
- Dimensions see pages 9/145 open and 9/162 enclosed.
- Wiring Diagrams see page 9/184.
- Replacement Parts see page 9/131.

Coil Table

60Hz Voltage	Letter
24	J
120	F
110–120/220–240①	A
200–208	D
220–240	G
277	L
220–240/440–480①	C
440–480	H
575–600	E

For other voltages and frequencies, see Factory Modifications page 9/119.

Open Type & Standard Width Enclosure, 3-Phase, 3-Pole

Max Hp				Cont-actor Amp Rating	NEMA Size	Half Size	Enclosure											
							Open Type⑥		NEMA 1 General Purpose		NEMA 4/4X Stainless Watertight, Dust-tight Corrosion Resistant 304 Stainless Steel		NEMA 4X Fiberglass Watertight, Dust-tight Corrosion Resistant		NEMA 7 & 9 NEMA 3 & 4 Div 1 and Div 2 Class I Groups C & D Class II Groups E, F & G Class III Bolted Enclosures Indoor/Outdoor Use		NEMA 12 NEMA 3/3R Industrial Use Weatherproof	
200 Volts	230 Volts	460 Volts	575 Volts				Catalog Number	List Price $	Catalog Number	List Price $	Catalog Number	List Price $	Catalog Number	List Price $	Catalog Number	List Price $	Catalog Number	List Price $
½	½	2	2	9	00	—	**43BP32A***		**43BP32B***		Use Size 0	—	Use Size 0	—	Use Size 0	—	Use Size 0	—
3	3	5	5	18	0	—	**43CP32A***		**43CP32B***		**43CP32W***		**43CP32F***		**43CP32H***		**43CP320***	
7½	7½	10	10	27	1	—	**43DP32A***		**43DP32B***		**43DP32W***		**43DP32F***		**43DP32H***		**43DP320***	
10	10	15	15	40	—	1¾	**43EP32A***		**43EP32B***		**43EP32W***		**43EP32F***		**43EP32H***		**43EP320***	
10	15	25	25	45	2	—	**43FP32A***		**43FP32B***		**43FP32W***		**43FP32F***		**43FP32H***		**43FP320***	
15	20	30	30	60	—	2½	**43GP32A***		**43GP32B***		**43GP32W***		**43GP32F***		**43GP32H***		**43GP320***	
25	30	50	50	90	3	—	**43HP32A***		**43HP32B***		**43HP32W***		**43HP32F***		**43HP32H***		**43HP320***	
30	40	75	75	115	—	3½	**43IP32A***		**43IP32B***		**43IP32W***		**43IP32F***		**43IP32H***		**43IP320***	
40	50	100	100	135	4	—	**43JG32A***		**43JG32B***		**43JG32W***		**43JG32F***		**43JG32H***		**43JG320***	
75	100	200	200	270	5	—	**43LP32A***		**43LP32B***		**43LP32E***②		—	—	—	—	**43LP320***	
100	200	400	400	540	6	—	**43MP32A***		**43MP32B***		**43MP32E***②		—	—	—	—	**43MP320***	
—	300	600	600	810	7④	—	**43NH32A***		**43NH32B***		**43NH32E***②		—	—	—	—	**43NH320***	
—	450	900	900	1215	8⑤	—	**43PH32A***		—	—	—	—	—	—	—	—	—	—

Open Type & Standard Width Enclosure, Single Phase, 3-Wire, 2-Pole③

Max Hp		Cont-actor Amp Rating	NEMA Size	Enclosure											
				Open Type		NEMA 1 General Purpose		NEMA 4/4X Stainless Watertight, Dust-tight Corrosion Resistant 304 Stainless Steel		NEMA 4X Fiberglass Watertight, Dust-tight Corrosion Resistant		NEMA 7 & 9 NEMA 3 & 4 Div 1 and Div 2 Class I Groups C & D Class II Groups E, F & G Class III Bolted Enclosures Indoor/Outdoor Use		NEMA 12 NEMA 3/3R Industrial Use Weatherproof	
115 Volts	208/230 Volts			Catalog No	List Price $	Catalog No	List Price $	Catalog No	List Price $	Catalog No	List Price $	Catalog No	List Price $	Catalog No	List Price $
⅓	1	9	00	**43BP12A***		**43BP12B***		Use Size 0	—	Use Size 0	—	Use Size 0	—	Use Size 0	—
1	2	18	0	**43CP12A***		**43CP12B***		**43CP12W***		**43CP12F***		**43CP12H***		**43CP120***	
2	3	27	1	**43DP12A***		**43DP12B***		**43DP12W***		**43DP12F***		**43DP12H***		**43DP120***	
3	5	35	1P	**43EP12A***		**43EP12B***		**43EP12W***		**43EP12F***		**43EP12H***		**43EP120***	

Note: Hp's shown above are based on the overload amp range for the FLA's (per the National Electric Code) of typical industrial motors. All starter sizes carry one maximum Hp rating.

① Dual voltage coils not available in size 5–8 starters.

② Enclosure is NEMA Type 4 (painted steel).

③ Coils D, F, or G will be wired for incoming voltage. J coil will be wired for separate source. Coils E, H, and L do not apply to single phase starters.

④ Only available
F coil 100-250V AC 50/60Hz, or DC
H coil 150-500V AC 50/60Hz, or DC

⑤ Only available
F coil 100-250V AC 50/60Hz, or DC

⑥ Auxiliary contacts
43B-43E 4th pole built-in
43F-43J 2 NO & 2 NC

Catalog Numbering System

General

Class
48 — Overload

Size
A — Frame A
B — Frame B

Model
T — ESP200

Current Range
A — 0.25–1①
B — 0.75–3.4①
C — 3–12①
D — 5.5–22①
E — 10–40
F — 13–52
G — 25–100
H — 50–200
J — 100–300 (3.33-10 current range with 300:5 CT and 1 loop with frame A1 (3-12A)-device)
K — 133–400 (3.33-10 current range with 400:5 CT and 1 loop with frame A1 (3-12A)-device)
L — 200–600 (3.33-10 current range with 600:5 CT and 1 loop with frame A1 (3-12A)-device)
M — 250–750 (3.33-10 current range with 750:5 CT and 1 loop with frame A1 (3-12A)-device)
N — 400–1200 (3.33-10.17 currant range with 1200:5 CT and 1 loop with frame A1 (3-12A)-device)

No. of Poles
3 — 3 Phase
1 — Single Phase

Reset
S — Selectable (Man/Auto)

Trip Curve
00 — Class 5, 10, 20 or 30 Selectable

Class
958 — Overload

Amp Range
E — 10–40
G — 25–100
H — 50–200

Model
B — ESP200

No. of Poles
3 — 3 phase

Type
S — Selectable (Man/Auto)

Trip Curve
A — 958

Class
958L — Overload

Amp Range
D — 5.5–22
E — 10–40
F — 13–52
G — 25–100
H — 50–200

Model
B — ESP200

No. of Poles
3 — 3 phase

Type
S — Selectable (Man/Auto)

Trip Curve
A — 958L

① Ranges available in Single or 3-phase.

Solid State ESP200, Class 48, 958 and 958L

General

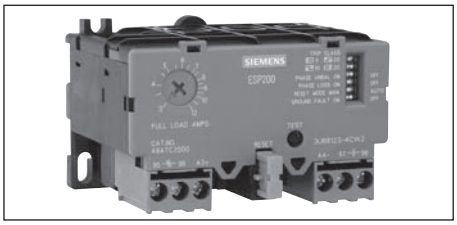

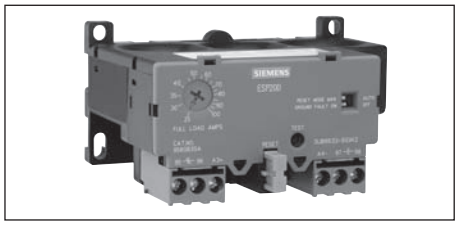

Features	Benefits
▪ Trip Classes - 5, 10, 20, or 30 Selectable by DIP-switches	▪ Field changeable reduces time and inventory. Suitable for light, normal and heavy starting conditions
▪ Phase Loss Protection - Trips in less than 3 Seconds	▪ Protects motor burn out and minimizes motor heating up
▪ Phase Unbalance - Trips based on Trip Class selected	▪ Minimizes temperature rise of the motor on a asymmetrical three-phase-system
▪ Ground Fault - Trips 60% of Motor Current	▪ Provides optimum system protection of motors against high-resistance short-circuits or ground faults due to moisture, condensation, damage of insulation or any other reason
▪ Trip Indicator - Visible	▪ Save time, faster to identify overload Trip
▪ Ambient Insensitive	▪ Prevents nuisance tripping
▪ No Heaters Required	▪ Saves cost and eliminates time for installation of heaters
▪ Self-Powered - No outside source required	▪ Reduce cost for external power supply
▪ FLA dial with wide Adjustment - 4:1 ratio	▪ Provides wide range, reduces inventory
▪ Self Protected in short circuit condition (when used with proper fuses or motor starter protector)	▪ Unlike bimetal overloads, this eliminates replacement of the overload heaters after short circuit
▪ Test Button - Tests Electronics	▪ Tests the complete electronic functions including the trip mechanism. Increases up time
▪ Thermal Memory	▪ Prevents re-starting motor when it is still hot
▪ Conformally coated circuit board	▪ Resists against environmental conditions
▪ 1 NO and 1NC Contacts Standard. B600, R300	▪ Makes it easier for user to wire local contacts
▪ Operating Temperature: -25 °C - 65 °C	▪ Wide operating temperature range prevents nuisance tripping with temperature changes
▪ Repeat Accuracy <1%.	▪ For more precise settings and reduced nuisance tripping
▪ Removable Terminal Block	▪ Terminal Block can be removed without removing wires. Saves time for replacements
▪ Automatic reset	▪ Auto. Reset is 3 minutes after tripping, allowing motor to cool down before re-start. If Manual Reset is selected, overload can be reset immediately
▪ Remote reset	▪ As an alternative to the mechanical RESET options, an electrical remote RESET can be used by applying 24 V DC to terminals A3 and A4
▪ DIN Rail Mounted	▪ Reduces installation time
▪ Touch - Safe Terminals	▪ Protects against accidental touching of live circuits
▪ UL listed CSA certified	▪ Third party approval standard

Solid State ESP200, Class 48, 958, 958L and Bimetal

ESP200 Solid State Overload

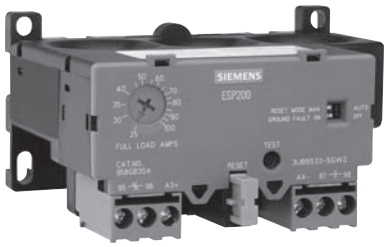

958 or 958L Solid State Overload

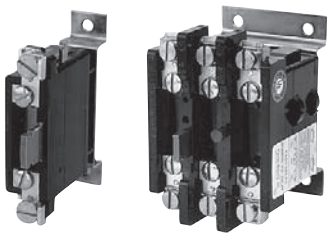

Ambient Compensated Bimetal Single Phase and Three Phase

Applications

ESP200 Solid State Overloads

Designed for a wide variety of applications. The field selectable Trip Class 5, 10, 20 or 30 can easily be set by 2 DIP switches. This eliminates the guess factor of an application requirements and provides reduced inventory for multiple applications. The inherent benefits of the ESP200 ultimately results in cost savings for the user.

ESP200 has a 4:1 current adjustment range with a fine adjustment dial labeled in full load amps. The heaterless overload minimizes the heat trapped in the enclosures, reduces cost for ventilation or cooling. Easily accessible Reset button, provides visible and audible indications to ensure the tripped overload is ready to re-start.

Designed to replace thermal, or ESP100 overload relays for any application. It has the same dimensions and footprint of the ESP100 overload relays. It can be directly coupled to the contactors or remotely mounted. In addition to the NEMA contactor applications, it also can be used with other types of controllers for applications requiring DP or IEC contactors. As a retrofit for other brands, it is used with a plate available for retrofitting competitive products.

958 ESP200 Special Use Solid State Overloads

This overload is specifically designed for special applications, to provide excellent protection of hermetically sealed and artificially cooled motors that require ambient insensitive and quick trip response times. Combined with a series lockout relay, it provides unsurpassed protection for hermetically sealed compressor motors in air conditioning applications. The combination of high trip speed, current adjustment, and ease of installation makes it suitable for these applications. The trip curves are customized to provide proper overload protection for these loads without causing nuisance tripping.

It has selectable manual or automatic reset mode, and provides ground fault selection to protect equipment from damage in case of a fault.

958L ESP200 Oil Field Solid State Overloads

Specifically designed for the oil market and the cycling loads experienced with these types of pumping applications. These overload relays provide protection for standard motors, oil well pump motors, multi-torque connections, and ultra-high slip motors.

Rotors can be damaged in less than 15 seconds during motor stall conditions if electrical power is not removed. To prevent damage during motor stall, the 958L solid state overload removes the power in 7 seconds at 250% lock rotor current. Therefore, the motor casing and the rotor will be protected from being damage saving the user money and time.

- **Ambient Compensated Bimetal Overloads**
  - —Automatic or manual reset adjustment
  - —A manual test button is provided to test the operation of the 3-pole overload relay control contacts
  - —±15% nominal trip current adjustment
  - —Accept either standard Class 20 or Quick Trip (NEMA Class 10) heater elements without any other changes or adjustments
  - —Available with a normally open contact for an alarm circuit (SPDT) up to 60A
  - —Compensated bimetal overload relays provide a constant trip time in ambient temperatures from –20°F to +170°F for a given heater rating
- UL Listed File #E22655 or Component Recognized
- CSA Certified File #LR6535

Ambient Compensated Bimetal Overloads

These thermal type overload relays are used to protect motors from excessive heat resulting from sustained motor overloads, rapid motor cycling and stalled rotor conditions. Although these devices function based on thermal principles they are designed to compensate for the ambient air temperature surrounding the overload. This helps prevent the occurrence of nuisance tripping when there are high surrounding ambient temperatures. The percentage of overload determines the length of time required to open the circuit.

Solid State Class 48, ESP200 and 3RB20

Selection

3-Phase, 48ATC3S00

Ordering Information

- ► For CT's see Accessories page 9/67.
- ► Dimensions see page 9/146.
- ► To retrofit or direct mount to a contactor, order 49ASMP1, 2, or 3 separately. See Retrofit Plates below.
- ► For remote mounting of frame size A order 49ASMS1 terminals separately, see page 9/108.

Solid State—Class 48

Current Adjustment Range	Phase	Frame Size	Catalog Number	MRPD/MLFB	List Price $
0.25–1	3	"A"	**48ATA3S00**	**3UB81134AB2**	
0.75–3.4	3	"A"	**48ATB3S00**	**3UB81134BB2**	
3–12	3	"A1"	**48ATC3S00**	**3UB81234CW2**	
5.5–22	3	"A1"	**48ATD3S00**	**3UB81234DW2**	
10–40	3	"A1"	**48ATE3S00**	**3UB81234EW2**	
13–52	3	"B"	**48BTF3S00**	**3UB81334FW2**	
25–100	3	"B"	**48BTG3S00**	**3UB81334GW2**	
50–200	3	"B"	**48BTH3S00**	**3UB81334HW2**	
100–300	3	"A1" ②	**48ATJ3S00**	**3UB81234JW2**	
133–400	3	"A1" ⑧	**48ATK3S00**	**3UB81234KW2**	
200–600	3	"A1" ④	**48ATL3S00**	**3UB81234LW2**	
250–750	3	"A1" ⑦	**48ATM3S00**	**3UB81234MW2**	
400–1220	3	"A1" ⑤	**48ATN3S00**	**3UB81234NW2**	
0.25–1	1	"A"	**48ATA1S00**	**3UB88134AB2**	
0.75–3.4	1	"A"	**48ATB1S00**	**3UB88134BB2**	
3–12	1	"A1"	**48ATC1S00**	**3UB88234CW2**	
5.5–22	1	"A1"	**48ATD1S00**	**3UB88234DW2**	
25-100	1	"B"	**48BTG1S00**	**3UB88334GW2**	

Solid State—3RB206③⑥, 3-Phase, Manual/Auto Reset

For Contactor Size	Setting Range Amps	Class 10 Catalog Number	List Price $	Class 20 Catalog Number	List Price $
5	55 - 250	**3RB2066-1GC2**		**3RB2066-2GC2**	
6	160 - 630	**3RB2066-1MC2**		**3RB2066-2MC2**	

Retrofit Plates for Contactors, Class 48

Replacement for Starter Sizes	ESP200 Overload Frame Size①	Retrofit Plate Suffix	Plate Kit Separate	Price Adder $
Size 00–1¾ Size 2, 2½	A or A1 B	1P 2P	**49ASMP1** **49ASMP2**	
Size 3, 3½ Size 4	B B	3P 4P	**49ASMP3** **49ASMP3**	

Ambient Compensated Bimetal—Open Type Class 48 Single Phase, 3-Phase (Panel Mount Only)

Poles	Amp Rating	Auxiliary Contacts	Contact Rating	Catalog Number	List Price $
1	25 60 100 180	1 NC 1 NC 1 NC 1 NC	5A (B600) & 5A (P300)	**48DA18AA4** **48GA18AA4** **48HA18AA4** **48JA18AA4**	
3	30 30 60 60	1 NC 1 NO/NC 1 NC 1 NO/NC	10A (A600) & 5A (P300)	**48DC38AA4** **48DC39AA4** **48GC38AA4** **48GC39AA4**	
	100 180	3 NC 3 NC	5A (B600) & 5A (P300)	**48HA38AA4** **48JA38AA4**	

① To determine frame size of replacement solid state overload, refer to retrofit plates table above.
② Requires use of 300:5 Current Transformers–3 of **97CT005**.
③ Product Category: IEC.
④ Requires use of 600:5 Current Transformers–3 of **97CT008**.
⑤ Requires use of 1200:5 Current Transformers–3 of **97CT012**.
⑥ Overload has busbar connections.
⑦ Requires use of 750:5 Current Transformers–3 of **97CT009**.
⑧ Requires use of 400:5 Current Transformers–3 of **97CT006**.

Special Use Solid State Overloads, Class 958 and 958L

Selection

Class 958, 958L

Ordering Information

► Dimensions see page 9/146.

Current Transformers

Rating	Catalog No.	List Price $
150:5	**97CT002**	
200:5	**97CT003**	
250:5	**97CT004**	
300:5	**97CT005**	
400:5	**97CT006**	
600:5	**97CT008**	
750:5	**97CT009**	
1200:5	**97CT012**	

Solid State—Class 958 and 958L

Current Adjustment Range	Phase	Frame Size	Catalog Number	MRPD/MLFB	List Price $
10–40	3	"A1"	**958EB3SA**	**3UB85235EW2**	
25–100	3	"B"	**958GB3SA**	**3UB85335GW2**	
50–200	3	"B"	**958HB3SA**	**3UB85335HW2**	
5.5–22	3	"A1"	**958LDB3SA**	**3UB85236DW2**	
10–40	3	"A1"	**958LEB3SA**	**3UB85236EW2**	
13–52	3	"B"	**958LFB3SA**	**3UB85336FW2**	
25–100	3	"B"	**958LGB3SA**	**3UB85336GW2**	
50–200	3	"B"	**958LHB3SA**	**3UB85336HW2**	

Time - Current - Characteristics CLASS 48

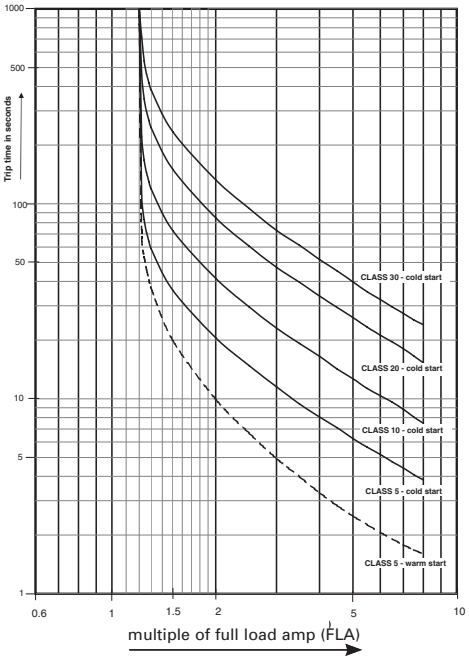

Time - Current - Characteristics CLASS 958, 958L

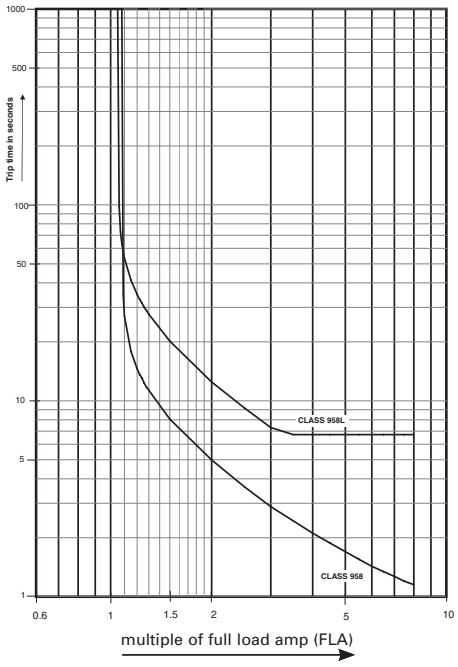

Trip - curve depending on unbalance CLASS 20

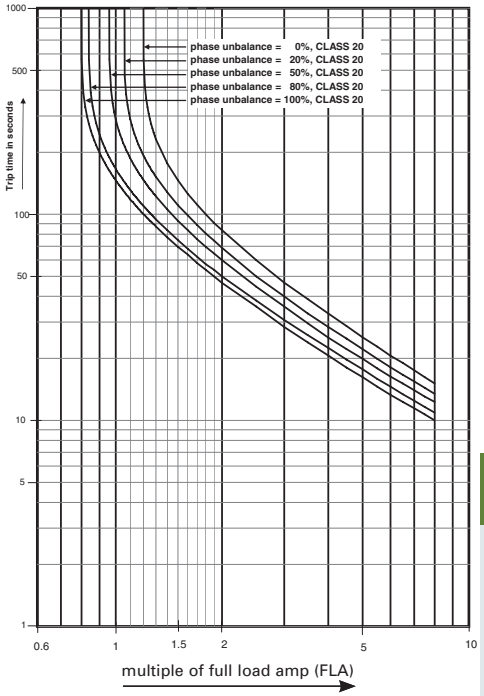

① Temperature rating −25° to +60°C.

Slim Line NEMA Pump Controller for the Agricultural industry, Class 82

Features

The Class 82 Slim Line NEMA Pump was designed specifically for the agricultural market. It is well suited for irrigation and similar pumping applications and is built to withstand the harsh elements of the outdoors

Typical applications include:

- Crop irrigation
- Sprinklers, misters and soakers
- Watering for livestock and other dairy applications
- Ground dewatering for excavation and construction sites

Why you should use the Class 82 Pump Panel

- Simplicity and its compact lightweight design makes this an attractive solution to your budgeting challenges.
- The contactor is NEMA rated to provide reliable motor control and protection expected in the most demanding applications.
- The ESP200 solid-state overload relay has a protective coating on the circuit board which gives it superior protection against high humidity, condensation and corrosive environments.
- Its size and weight is about half that of the Class 87 which increases the ease of installation.

Catalog Numbering System

82	A	D	C	6	F	B	H

Series

A = Standard size enclosure
B = Extra large enclosure (starter size 1 only)

Starter Size

D = 1
F = 2

OLR Current Range

B = 0.75-3.4A
C = 3-12A
D = 5.5-22A
E = 10-40A
F = 13-52A

Cover Control

6 = HOA selector switch with Start push button

Disconnect Type

F = Fusible disconnect

Disconnect & Fuse Clip Rating

A = 30A/250V
B = 30A/600V
C = 60A/250V
D = 60A/600V

Coil Voltage

F = 110VAC 50HZ / 120VAC 60HZ
G = 220VAC 50HZ / 240VAC 60HZ
H = 480VAC 60HZ

Slim Line NEMA Pump Controller for the Agricultural industry, Class 82

General

Ordering Information

- Field Modification Kits (see accessories on this page)
- Factory Modifications (NA)
- Dimensions see page 9/167
- Wiring Diagram see page 9/187
- Replacement Parts (refer to instruction sheet A5E35327591A)

Coil Table

50/60Hz Voltage	Letter
110VAC 50HZ / 120VAC 60HZ	F
220VAC 50HZ / 240VAC 60HZ	G①
480VAC 60HZ	H②

Product Selection

Max Hp Rating Motor Voltage		NEMA Size	Overload Relay Amp Range	Disc. Amp Rating	Fuse Clip Amp/Volts	HOA & Start Push Button		HOA & Start Push Button (Extra wide Encl)	
230	460					Catalog Number	List Price $	Catalog Number	List Price $
—	1	1	0.75–3.4	30	30A/600V	**82ADB6FB***		**82BDB6FB***③	
—	5	1	3–12	30	30A/600V	**82ADC6FB***		**82BDC6FB***③	
—	10	1	5.5–22	30	30A/600V	**82ADD6FB***		**82BDD6FB***③	
—	10	1	10–40	30	30A/600V	**—**		**82BDE6FB***③	
2	—	1	3–12	30	30A/250V	**82ADC6FA***		**82BDC6FA***③	
3	—	1	5.5–22	30	30A/250V	**82ADD6FA***		**82BDD6FA***③	
7 1/2	—	1	10–40	30	30A/250V	**82ADE6FA***		**82BDE6FA***③	
—	25	2	13-52	60	60A/600V	**82AFF6FD***③		—	
15	—	2	13-52	60	60A/250V	**82AFF6FC***③		—	

Replace the (*) with a letter from the coil table.
③ Available in May 2017.

Accessories

Image	Description	Catalog Number	List Price
	3/4" type 3R conduit hub	**ECHS075**	
	1" type 3R conduit hub	**ECHS100**	
	1 1/4" type 3R conduit hub	**ECHS125**	
	1 1/2" type 3R conduit hub	**ECHS150**	
	Disconnect switch auxiliary contacts 2 NO/2 NC DPDT (NEMA A600)	**HA261234**	
	Fuse puller kit for 30A switch (1 kit required per switch)	**HP61**	
	30A, 240V Class R Fuse Clip Kits	**HR21**	
	30A, 600V Class R Fuse Clip Kits	**HR612**	

Image	Description	Catalog Number	List Price
	Contactor auxiliary contacts, side mounted 1 NO/NC (NEMA A300/ Q300)	**3RH29111DA11**	
	ESP200 tamper resistance cover	**49ASTC1**	

① G coil is not available with a 600v disconnect
② H coil is not available with a 250v disconnect

Class 82 Technical information

General Technical Data:	
Weight	Size 1 (Standard Encl.) 23lbs. Size 1 (Extra Wide Encl.) 47lbs. Size 2 (Standard Encl.) 47lbs.
Height x Width x Depth	Size 1 (Standard Encl.) 26 x 12 x 5in. Size 1 (Extra Wide Encl.) 35 x 17 x 6in. Size 2 (Standard Encl.) 35 x 17 x 6in.
Maximum altitude	6560 ft.
Ambient (outside enclosure) storage temperature	(-30 to 65)°C / (-22 to 149)°F
Ambient (outside enclosure) operating temperature	(-20 to 40)°C / (-4 to 104)°F
Country of origin	Mexico
Horsepower Rating:	
See selection table above	See selection table above
Contactor:	
Number of NO main contacts	3
Amp rating	32A, 50A
Mechanical operating cycles	10,000,000
Internal / Standard Auxiliary Contact:	
Number of NC / NO auxiliary contacts	1NC / 1NO
NEMA contact rating designation	A600 AC / Q600 DC
Optional auxiliary contacts available	Yes
Coil:	
Voltage	220/230V 50/60Hz, 460V 60Hz, or 110/120V 50/60Hz
Apparent pull-in / holding power	81 VA / 10.5 VA
Normal coil operating limits (% of rated voltage)	80% - 110% at 60Hz
Pick-up time / Drop-out time	8-40 / 4-16 msec
Overload Relay:	
Current range	0.75 - 3.4 or 3 - 12 or 5.5 - 22 or 10 - 40 Amps or 13 - 52 Amps
Trip Class	Class 5 / 10 (factory set) / 20 / 30
Trip detection	Overload, phase failure, phase unbalance, ground fault
Phase failure sensitivity	Trip time after phase loss: < 3 sec
Repeat accuracy	Within 1%
Reset options	Manual, automatic and remote
External reset	Yes
Test function	Electronics and manual actuation
Conformal coating on printed circuit board	Yes
Number of NC / NO auxiliary contacts	1NC /1NO
Rating of auxiliary contacts	B600 AC / R300 DC
Single contact isolation	600 V
Dual contact isolation	300 V differing polarity / 600 V common polarity

Class 82 Technical information

Disconnect Switch:	
Rating	30 A with 30A/600 or 30A/250 V Class H fuse clips 60 A with 60A/600 or 60A/250 V Class H fuse clips
Fuse type accepted	Class H, J or R
Enclosure:	
Type	NEMA Type 3/3R enclosure
Rating	Weather proof for outdoor use
Standard Control Devices:	
Hand-Off-Auto selector switch	3SU1 30mm, round, metal with matte finish
Start push button	3SU1 30mm, round, metal with matte finish
Mounting / Wiring:	
Mounting orientation	Vertical
Mounting type	Pole and surface
Disconnect line side connection type / torque	Box lug / 35 lb in (14 - 10); 40 lb in (8); 45 lb in (6 - 4) AWG
Disconnect line side solid and stranded conductors	1x(14 - 2 AWG) 60/75°C AL or CU
Power terminal block connection type / torque	Screw / 24 - 32 lb - in
Power terminal block solid and stranded conductors	1x(18 - 2 AWG) 75°C CU
Control terminal block connection type / torque	Screw / 12 - 18 lb - in
Control terminal block solid and stranded conductors	1x(22 - 8 AWG) 75°C CU
Coil connection type / torque	Screw / 7 - 10 lb in
Coil solid and standed conductors	2x(16 - 12 AWG) CU 60/75°C
Main auxiliary contact connection type / torque	Screw / 7 - 10 lb in
Main auxiliary contact solid and stranded conductors	2x(20 - 16), 2x(18 - 14) 75°C CU
OLR auxiliary contact connection type / torque	Screw / 7 - 10 lb in
OLR auxiliary contact solid and starnded conductors	2x(20 - 14 AWG) CU 60/75°C
Short Circuit Current Rating:	
Fuses	10kA@600V (Class H or K); 85kA@600V (Class R or J)
Certificates / Approvals:	
cULus	UL (file no. E185287)
UL rated Service Entrance Equipment	ISO 9001 certification

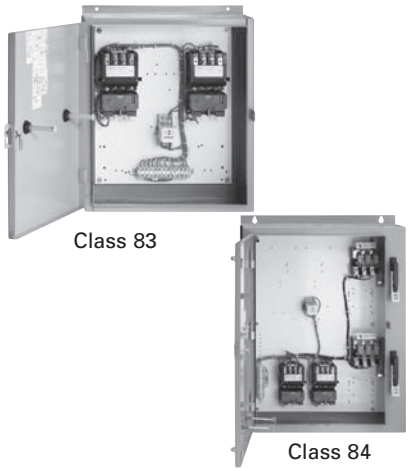

Features

- Heavy Duty NEMA Starters
- Solid State or Thermal Overload Relays
- Fusible or MCP
- Heavy Duty Disconnect Handle
- Flexibility with Field Modifications
- Alternator Transfer on De-energization
- UL Listed for Outdoor Use
- UL Listed file #E14900 (class 83); file #E185287 (class 84)
- CSA certified file #LR 6535 (class 83 & 84)

Application

Duplex pump controls are designed to perform one or both of two distinct functions: duplexing and alternation. The duplexing function provides capacity for system peaking or above normal demand without having the full motor capacity spinning at all times. It also provides standby capacity for use when one of the motors or pumps is disabled. The duplexing function is also referred to as lead/lag or main/standby. When two pumps or compressors are controlled by a duplex controller, they are started in sequence as necessary to attain preset values of pressure, flow or liquid level.

Two field devices such as pressure switches or float switches provide electrical signals to the duplex controller. One remote device is set to initiate the starting of the lead motor. This motor is rated to handle normal system demand. The second motor is usually the same rating and is referred to as the lag motor. It is only energized when the system demand is greater than the capacity of the lead motor. The lag motor is started when the second remote device is signalling for more output than the lead motor can produce.

The alternation function reverses the lead and lag mode for the two motors in a duplex system. Upon alternation the first motor as described above becomes the lag motor and the second motor assumes the lead function. The alternation is usually programmed to occur at any time both pumps come to rest. The alternation function equalizes wear on the two machines and extends the life of seals and bearings.

Enclosure Types

Duplex controllers are available in NEMA 1, 12/3/3R, 4 (painted) and 4/4X (stainless) enclosures. Enclosures protect personnel from contact with live parts and depending upon the construction, protect the control in varying degrees from physical damage and harmful atmospheres. All enclosures are supplied with corrosion resistant finishes.

Heavy Duty Starters

These Duplex controllers use the same starters described in the heavy duty starter section of this catalog.

Siemens Type ETI Circuit Breaker

The ETI circuit breaker is a device designed specifically for application in motor circuits. The ETI is a magnetic only protective device designed to provide protection against short circuit current.

The instantaneous-only type ETI circuit breaker employs adjustable magnetic trip settings to allow broader application ranges and a higher degree of motor short circuit protection.

Features

Two control transformers may be provided for low voltage control to safeguard personnel from high voltage. One transformer is required for each starter to provide independent control circuits.

A Hand-Off-Auto selector switch for each starter may be mounted in the enclosure door or furnished separately for remote control. Test push buttons or pilot lights may also be installed on the enclosure.

Solid-state or Ambient Compensated Bimetal Overload Relays are supplied as standard.

Heavy Duty Disconnect Switches

The disconnect switch that goes the distance in durability, performance and reliability has the following advantages:

- Visible blades for the highest level of safety
- Double break switching action to reduce arcing, increase lifetime and eliminate the "electric hinge"
- More rugged positive action switch
- Oversized lugs are standard
- Line side shield to help guard personnel from contact with live parts
- Higher horsepower rating for design E high efficiency motors
- UL listed for Ilsco, Burndy and T&B crimp type lugs
- The 200A switch accepts up to 300 MCM versus 250 MCM wire size

Its rugged construction - with a high fault withstand rating of 100kA at 600 VAC when fused with class R rated fuses - meets the most stringent industry standards set forth by the automotive, petro-chemical, and pulp and paper industries. UL recognized and CSA certified, our disconnect switches are available either non-fusible or fusible with class R and class J fuse clips.

Non-Combination, Class 83

Selection

Ordering Information

- Standard duplex controllers include an alternator indicated by characters "92" within the catalog number. The standard coil voltage supplied with the alternator is 120V separate control. This is the only control voltage available with the alternator.
- To omit the alternator, change the character string within the catalog number from "92" to "95". All coil voltages listed in the coil table are valid with non-alternator controllers.
- To change the coil voltage for non-alternator controllers with a solid-state OLR, change the 9th character in the catalog number with a letter shown in the coil table. To change the coil voltage for non-alternator controllers with a bimetal OLR, change the 8th character in the catalog number with a letter shown in the coil table.
- Heater elements for bimetal overloads see page 9/124 (6-Required).
- Field Modification Kits see page 9/104.
- Factory Modifications see page 9/119.
- Dimensions see page 9/168.
- Wiring Diagrams see page 9/185.
- Replacement Parts see page 9/131.

Coil Table

60Hz Voltage	Letter
24①	J
120	F
200–208①	D
220–240①	G
277①	L
440–480①	H
550–600①	E

Non-Combination (with Solid-State Overload)

Max Hp						Overload		Enclosure							
								NEMA 1 General Purpose		NEMA 4/4X Stainless Watertight, Dust-tight, Corrosion Resistant 304 Stainless Steel		NEMA 4 Painted Watertight, Dust-tight		NEMA 12 NEMA 3/3R Industrial Use Weatherproof	
200 Volts	230 Volts	460 Volts	575 Volts	NEMA Size	Half Size	Amp Range	Frame Size	Catalog Number	List Price $	Catalog Number	List Price $	Catalog Number	List Price $	Catalog Number	List Price $
⅛	⅛	⅓	½	0	—	0.25–1	A	**83CUA92BF**		**83CUA92WF**		**83CUA92EF**		**83CUA920F**	
½	¾	1½	2	0	—	0.75–3.4	A	**83CUB92BF**		**83CUB92WF**		**83CUB92EF**		**83CUB920F**	
2	2	5	5	0	—	3–12	A1	**83CUC92BF**		**83CUC92WF**		**83CUC92EF**		**83CUC920F**	
3	3	—	—	0	—	5.5–22	A1	**83CUD92BF**		**83CUD92WF**		**83CUD92EF**		**83CUD920F**	
⅛	⅛	⅓	½	1	—	0.25–1	A	**83DUA92BF**		**83DUA92WF**		**83DUA92EF**		**83DUA920F**	
½	¾	1½	2	1	—	0.75–3.4	A	**83DUB92BF**		**83DUB92WF**		**83DUB92EF**		**83DUB920F**	
2	2	5	5	1	—	3–12	A1	**83DUC92BF**		**83DUC92WF**		**83DUC92EF**		**83DUC920F**	
3	3	10	10	1	—	5.5–22	A1	**83DUD92BF**		**83DUD92WF**		**83DUD92EF**		**83DUD920F**	
7½	7½	—	—	1	—	10–40	A1	**83DUE92BF**		**83DUE92WF**		**83DUE92EF**		**83DUE920F**	
10	10	15	15	—	1¾	10–40	A1	**83EUE92BF**		**83EUE92WF**		**83EUE92EF**		**83EUE920F**	
10	15	25	25	2	—	13–52	B	**83FUF92BF**		**83FUF92WF**		**83FUF92EF**		**83FUF920F**	
15	20	30	30	—	2½	25–100	B	**83GUG92BF**		**83GUG92WF**		**83GUG92EF**		**83GUG920F**	
25	30	50	50	3	—	25–100	B	**83HUG92BF**		**83HUG92WF**		**83HUG92EF**		**83HUG920F**	
30	40	75	75	—	3½	50–200	B	**83IUH92BF**		**83IUH92WF**		**83IUH92EF**		**83IUH920F**	
40	50	100	100	4	—	50–200	B	**83JUH92BF**		**83JUH92WF**		**83JUH92EF**		**83JUH920F**	

Non-Combination (with Ambient Compensated Bimetal Overload)②

Max Hp						Enclosure							
						NEMA 1 General Purpose		NEMA 4/4X Stainless Watertight, Dust-tight Corrosion Resistant 304 Stainless Steel		NEMA 4 Painted Watertight Dust-tight		NEMA 12/3R Industrial Use Weatherproof	
200 Volts	230 Volts	460 Volts	575 Volts	NEMA Size	Half Size	Catalog Number	List Price $	Catalog Number	List Price $	Catalog Number	List Price $	Catalog Number	List Price $
3	3	5	5	0	—	**83CP92BF81**		**83CP92WF81**		**83CP92EF81**		**83CP920F81**	
7½	7½	10	10	1	—	**83DP92BF81**		**83DP92WF81**		**83DP92EF81**		**83DP920F81**	
10	10	15	15	—	1¾	**83EP92BF81**		**83EP92WF81**		**83EP92EF81**		**83EP920F81**	
10	15	25	25	2	—	**83FP92BF81**		**83FP92WF81**		**83FP92EF81**		**83FP920F81**	
15	20	30	30	—	2½	**83GP92BF81**		**83GP92WF81**		**83GP92EF81**		**83GP920F81**	
25	30	50	50	3	—	**83HP92BF81**		**83HP92WF81**		**83HP92EF81**		**83HP920F81**	
30	40	75	75	—	3½	**83IP92BF81**		**83IP92WF81**		**83IP92EF81**		**83IP920F81**	
40	50	100	100	4	—	**83JP92BF81**		**83JP92WF81**		**83JP92EF81**		**83JP920F81**	

Note: Hp's shown above are based on the overload amp range for the FLA's (per the National Electric Code) of typical industrial motors. All starter sizes carry one maximum Hp rating.

① Not available on standard alternator style ('92' in the catalog number).
② For NO/NC SPDT contact on overload, replace "81" with "91". "81" will give a NC contact.

Combination Disconnect (Fusible & Non-Fusible), Class 84

Selection

Ordering Information

- Standard duplex controllers include an alternator indicated by characters "92" within the catalog number. The standard coil voltage supplied with the alternator is 120V separate control. This is the only control voltage available with the alternator.
- To omit the alternator, change the character string within the catalog number from "92" to "95". All coil voltages listed in the coil table are valid with non-alternator controllers.
- To change the coil voltage for non-alternator controllers with a solid-state OLR, change the 10th character in the catalog number with a letter shown in the coil table. To change the coil voltage for non-alternator controllers with a bimetal OLR, change the 9th character in the catalog number with a letter shown in the coil table.
- Heater elements for bimetal overloads see page 9/124 (6-Required).
- For factory installed fusible disconnect, see page 9/120.
- Field Modification Kits see page 9/104.
- Factory Modifications see page 9/119.
- Dimensions see page 9/168.
- Wiring Diagrams see page 9/185.
- Replacement Parts see page 9/131.

Coil Table

60Hz Voltage	Letter
24①	J
120	F
200–208①	D
220–240①	G
277①	L
440–480①	H
550–600①	E

Two Disconnect Switches with Solid-State Overload

Max Hp						Overload			Enclosure							
									NEMA 1 General Purpose		NEMA 4/4X Stainless Watertight, Dust-tight, Corrosion Resistant 304 Stainless Steel		NEMA 4 Painted Watertight, Dust-tight		NEMA 12 NEMA 3/3R Industrial Use Weatherproof	
200 Volts	230 Volts	460 Volts	575 Volts	NEMA Size	Half Size	Amp Range	Frame Size	Disc. Amp Range	Catalog Number	List Price $	Catalog Number	List Price $	Catalog Number	List Price $	Catalog Number	List Price $
⅛	⅛	⅓	½	0	—	0.25–1	A	30	**84CUA92BDF**		**84CUA92WDF**		**84CUA92EDF**		**84CUA920DF**	
½	¾	1½	2	0	—	0.75–3.4	A	30	**84CUB92BDF**		**84CUB92WDF**		**84CUB92EDF**		**84CUB920DF**	
2	2	5	5	0	—	3–12	A1	30	**84CUC92BDF**		**84CUC92WDF**		**84CUC92EDF**		**84CUC920DF**	
3	3	—	—	0	—	5.5–22	A1	30	**84CUD92BDF**		**84CUD92WDF**		**84CUD92EDF**		**84CUD920DF**	
⅛	⅛	⅓	½	1	—	0.25–1	A	30	**84DUA92BDF**		**84DUA92WDF**		**84DUA92EDF**		**84DUA920DF**	
½	¾	1½	2	1	—	0.75–3.4	A	30	**84DUB92BDF**		**84DUB92WDF**		**84DUB92EDF**		**84DUB920DF**	
2	2	5	5	1	—	3–12	A1	30	**84DUC92BDF**		**84DUC92WDF**		**84DUC92EDF**		**84DUC920DF**	
3	3	10	10	1	—	5.5–22	A1	30	**84DUD92BDF**		**84DUD92WDF**		**84DUD92EDF**		**84DUD920DF**	
7½	7½	—	—	1	—	10–40	A1	30	**84DUE92BDF**		**84DUE92WDF**		**84DUE92EDF**		**84DUE920DF**	
10	10	15	15	—	1¾	10–40	A1	60	**84EUE92BDF**		**84EUE92WDF**		**84EUE92EDF**		**84EUE920DF**	
10	15	25	25	2	—	13–52	B	60	**84FUF92BDF**		**84FUF92WDF**		**84FUF92EDF**		**84FUF920DF**	
15	20	30	30	—	2½	25–100	B	100	**84GUG92BDF**		**84GUG92WDF**		**84GUG92EDF**		**84GUG920DF**	
20	25	50	50	3	—	25–100	B	100	**84HUG92BDF**		**84HUG92WDF**		**84HUG92EDF**		**84HUG920DF**	
30	40	75	75	—	3½	50–200	B	200	**84IUH92BDF**		**84IUH92WDF**		**84IUH92EDF**		**84IUH920DF**	
40	50	100	100	4	—	50–200	B	200	**84JUH92BDF**		**84JUH92WDF**		**84JUH92EDF**		**84JUH920DF**	

Two Disconnect Switches with Ambient Compensated Bimetal Overload②

Max Hp							Enclosure							
							NEMA 1 General Purpose		NEMA 4/4X Stainless Watertight, Dust-tight Corrosion Resistant 304 Stainless Steel		NEMA 4 Painted Watertight Dust-tight		NEMA 12/3R Industrial Use Weatherproof	
200 Volts	230 Volts	460 Volts	575 Volts	NEMA Size	Half Size	Disc Amp Range	Catalog Number	List Price $	Catalog Number	List Price $	Catalog Number	List Price $	Catalog Number	List Price $
3	3	5	5	0	—	30	**84CP92BDF81**		**84CP92WDF81**		**84CP92EDF81**		**84CP920DF81**	
7½	7½	10	10	1	—	30	**84DP92BDF81**		**84DP92WDF81**		**84DP92EDF81**		**84DP920DF81**	
10	10	15	15	—	1¾	60	**84EP92BDF81**		**84EP92WDF81**		**84EP92EDF81**		**84EP920DF81**	
10	15	25	25	2	—	60	**84FP92BDF81**		**84FP92WDF81**		**84FP92EDF81**		**84FP920DF81**	
15	20	30	30	—	2½	100	**84GP92BDF81**		**84GP92WDF81**		**84GP92EDF81**		**84GP920DF81**	
20	25	50	50	3	—	100	**84HP92BDF81**		**84HP92WDF81**		**84HP92EDF81**		**84HP920DF81**	
30	40	75	75	—	3½	200	**84IP92BDF81**		**84IP92WDF81**		**84IP92EDF81**		**84IP920DF81**	
40	50	100	100	4	—	200	**84JP92BDF81**		**84JP92WDF81**		**84JP92EDF81**		**84JP920DF81**	

Note: Hp's shown above are based on the overload amp range for the FLA's (per the National Electric Code) of typical industrial motors. All starter sizes carry one maximum Hp rating.

① Not available on standard alternator style ('92' in the catalog number).

② For NO/NC SPDT contact on overload, replace "81" with "91". "81" will give a NC contact.

Combination Circuit Breaker, Class 84

Selection

Ordering Information

- Standard duplex controllers include an alternator indicated by characters "92" within the catalog number. The standard coil voltage supplied with the alternator is 120V separate control. This is the only control voltage available with the alternator.
- To omit the alternator, change the character string within the catalog number from "92" to "95". All coil voltages listed in the coil table are valid with non-alternator controllers.
- To change the coil voltage for non-alternator controllers, change the 10th character in the catalog number with a letter shown in the coil table.
- Heater elements for bimetal overloads see page 9/124 (6-Required).
- Field Modification Kits see page 9/104.
- Factory Modifications see page 9/119.
- Dimensions see page 9/168.
- Wiring Diagrams see page 9/185.
- Replacement Parts see page 9/131.

Coil Table

60Hz Voltage	Letter
24①	J
120	F
200–208①	D
220–240①	G
277①	L
440–480①	H
550–600①	E

2 Motor Circuit Protectors (with Solid-State Overload)

Max Hp						Overload			Enclosure							
									NEMA 1 General Purpose		NEMA 4/4X Stainless Watertight, Dust-tight, Corrosion Resistant , 304 Stainless Steel,		NEMA 4 Painted Watertight, Dust-tight		NEMA 12 NEMA 3/3R Industrial Use, Weatherproof	
200 Volts	230 Volts	460 Volts	575 Volts	NEMA Size	Half Size	Amp Range	Frame Size	Motor Circuit Interrupter ETI	Catalog Number	List Price $	Catalog Number	List Price $	Catalog Number	List Price $	Catalog Number	List Price $
⅛	⅛	⅓	½	0	—	0.25–1	A	3	84CUA92BMF		84CUA92WMF		84CUA92EMF		84CUA920MF	
½	¾	1½	2	0	—	0.75–3.4	A	3	84CUB92BMF		84CUB92WMF		84CUB92EMF		84CUB920MF	
2	2	5	5	0	—	3–12	A1	10	84CUC92BMF		84CUC92WMF		84CUC92EMF		84CUC920MF	
3	3	—	—	0	—	5.5–22	A1	25	84CUD92BMF		84CUD92WMF		84CUD92EMF		84CUD920MF	
⅛	⅛	⅓	½	1	—	0.25–1	A	3	84DUA92BMF		84DUA92WMF		84DUA92EMF		84DUA920MF	
½	¾	1½	2	1	—	0.75–3.4	A	3	84DUB92BMF		84DUB92WMF		84DUB92EMF		84DUB920MF	
2	2	5	5	1	—	3–12	A1	10	84DUC92BMF		84DUC92WMF		84DUC92EMF		84DUC920MF	
3	3	10	10	1	—	5.5–22	A1	25	84DUD92BMF		84DUD92WMF		84DUD92EMF		84DUD920MF	
7½	7½	—	—	1	—	10–40	A1	30	84DUE92BMF		84DUE92WMF		84DUE92EMF		84DUE920MF	
—	—	15	15	—	1¾	10–40	A1	40	84EUE92BMF		84EUE92WMF		84EUE92EMF		84EUE920MF	
10	15	25	25	2	—	13–52	B	50	84FUF92BMF		84FUF92WMF		84FUF92EMF		84FUF920MF	
15	20	30	30	—	2½	25–100	B	100	84GUG92BMF		84GUG92WMF		84GUG92EMF		84GUG920MF	
20	25	50	50	3	—	25–100	B	100	84HUG92BMF		84HUG92WMF		84HUG92EMF		84HUG920MF	
30	40	75	75	—	3½	50–200	B	125	84IUH92BMF		84IUH92WMF		84IUH92EMF		84IUH920MF	
40	50	100	100	4	—	50–200	B	150	84JUH92BMF		84JUH92WMF		84JUH92EMF		84JUH920MF	

2 Motor Circuit Protectors (with Ambient Compensated Bimetal Overload)②

Max Hp							Enclosure							
							NEMA 1 General Purpose		NEMA 4/4X Stainless Watertight, Dust-tight Corrosion Resistant 304 Stainless Steel		NEMA 4 Painted Watertight Dust-tight		NEMA 12/3R Industrial Use Weatherproof	
200 Volts	230 Volts	460 Volts	575 Volts	NEMA Size	Half Size	Motor Circuit Interrupter ETI	Catalog Number	List Price $	Catalog Number	List Price $	Catalog Number	List Price $	Catalog Number	List Price $
½	¾	1½	2	0	—	3	84CPB92BMF81		84CPB92WMF81		84CPB92EMF81		84CPB920MF81	
2	2	5	5	0	—	10	84CPD92BMF81		84CPD92WMF81		84CPD92EMF81		84CPD920MF81	
3	3	—	—	0	—	25	84CPE92BMF81		84CPE92WMF81		84CPE92EMF81		84CPE920MF81	
½	¾	1½	2	1	—	3	84DPB92BMF81		84DPB92WMF81		84DPB92EMF81		84DPB920MF81	
2	2	5	5	1	—	10	84DPD92BMF81		84DPD92WMF81		84DPD92EMF81		84DPD920MF81	
3	3	10	10	1	—	25	84DPE92BMF81		84DPE92WMF81		84DPE92EMF81		84DPE920MF81	
7½	7½	—	—	1	—	30	84DPF92BMF81		84DPF92WMF81		84DPF92EMF81		84DPF920MF81	
—	—	15	15	—	1¾	40	84EPF92BMF81		84EPF92WMF81		84EPF92EMF81		84EPF920MF81	
10	10	—	—	—	1¾	50	84EPG92BMF81		84EPG92WMF81		84EPG92EMF81		84EPG920MF81	
—	—	15	20	2	—	40	84FPF92BMF81		84FPF92WMF81		84FPF92EMF81		84FPF920MF81	
10	15	25	25	2	—	50	84FPH92BMF81		84FPH92WMF81		84FPH92EMF81		84FPH920MF81	
—	—	30	30	—	2½	50	84GPH92BMF81		84GPH92WMF81		84GPH92EMF81		84GPH920MF81	
15	20	—	—	—	2½	100	84GPJ92BMF81		84GPJ92WMF81		84GPJ92EMF81		84GPJ920MF81	
—	—	30	40	3	—	50	84HPJ92BMF81		84HPJ92WMF81		84HPJ92EMF81		84HPJ920MF81	
20	25	50	50	3	—	100	84HPK92BMF81		84HPK92WMF81		84HPK92EMF81		84HPK920MF81	
30	40	75	75	—	3½	125	84IPL92BMF81		84IPL92WMF81		84IPL92EMF81		84IPL920MF81	
40	50	100	100	4	—	150	84JPM92BMF81		84JPM92WMF81		84JPM92EMF81		84JPM920MF81	

Note: Hp's shown above are based on the overload amp range for the FLA's (per the National Electric Code) of typical industrial motors. All starter sizes carry one maximum Hp rating.

① Not available on standard alternator style ('92' in the catalog number).

② For NO/NC SPDT contact on overload, replace "81" with "91". "81" will give a NC contact.

Features

- Fully Gasketed NEMA 3R Rainproof Enclosures
- 100,000 Amp Interrupting Capacity with Class R Fuses
- Heavy Duty NEMA Starters
- Solid State or Ambient Compensated Bimetal Overload Relays
- Heavy Duty Disconnect Handle
- Available in Reduced Voltage Versions
- Bold Pilot Legend on Front
- Generous Accessory Space
- Copper Grounding Lug For Three #6 Wires
- UL Listed for Outdoor Use and Service Equipment File #E185287

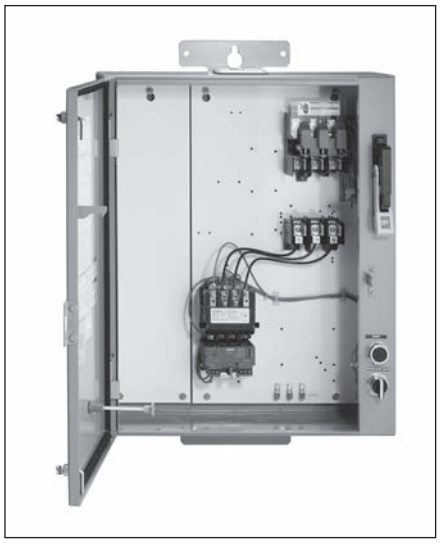

Application

Heavy duty pump control panels are designed to withstand the most demanding environments. Typical applications include irrigation, agriculture, petrochemical, wastewater treatment and wherever motor control is challenged by harsh elements.

Rugged pump control panels utilized cold forming "tox" process. They are more rainproof, sleet and ice resistant than in the past.

Installation is easy. Panels are factory wired to provide flexible control and protect against short circuits and overloads. Ample space is provided for field modifications and installation of accessories.

The pump control panels feature a full sized removable auxiliary panel for the mounting of accessories. The fusible version features fuse clips for full sized RK5 or compact class J fuses and accessory mounting space for the most commonly used accessories.

Class 87 pump panels become jockey pump panels with the addition of a pressure switch. The jockey pump's primary function is to maintain water pressure at a preset level and thus compensate for possible shortage of water in the pumping system. When the water pressure drops below the preset level, the pressure switch energizes the starter which in turn activates the jockey pump. The water pressure is then brought back up to the desired level. This insures the maintenance of proper water pressure at all times.

Features

Specified by Fortune 500 companies, Siemens NEMA starters offer prolonged service under severe duty conditions. NEMA rated, these starters utilize large silver cadmium oxide contacts and wide copper heat sinks to ensure rapid heat dissipation and maximum electrical life.

ESP200 solid state overload relay
Refer to the section on Class 48 overload relays for features and benefits. Pump panels are factory set at trip Class 10.

The ambient compensated bimetal overload relays are designed to parallel thermal characteristics of typical pump motors. They prevent nuisance trips that may result from operation of the control in a higher ambient temperature than that at the pump. These relays are trip-free, tamperproof and can be set to reset automatically or manually.

HOA and Start Pushbutton

Every pump panel comes with an HOA and a start pushbutton.

Half Size Starters

Siemens motor matched starters feature all the rugged performance characteristics of our NEMA rated starter sizes, but are fractionally sized to more closely match your exact motor rating. As a result, significant economic savings are made possible without sacrificing the reliability you expect from a heavy duty starter.

These additional starter sizes have the reserve capacity to handle occasional plugging and jogging without de-rating the device.

Siemens motor matched can save hundreds, even thousands of dollars per project.

Siemens motor matched starters comply with NEMA, UL and CSA standards.

Panels are predrilled for easy repositioning of the fuse trailer block to accommodate 250 and 600 volt fuses and full sized RK or compact J fuses. Circuit breakers are also available.

Heavy Duty Fusible Disconnect Switch

The disconnect switch has the following advantages:

- Visible blades for the highest level of safety
- Double Break Switching Action to reduce arcing, increase lifetime and eliminate the "electric hinge"
- Oversized lugs are standard
- Line side shield to help guard personnel from contact with live parts

Motor Circuit Protector

The motor circuit protector provides fast, accurate fault clearing that will minimize damage to the motor and control apparatus and protect branch circuit conductors. Continuous current ratings and adjustable trip ranges meet NEC requirements for full load and locked rotor currents. The adjustable instantaneous trip point can be set precisely to assure fault protection and eliminate nuisance tripping.

Removable Door

Enclosure door may be lifted off to make wiring easier.

Mounting Flanges

Convenient flanges at top and bottom of the enclosure provide easy mounting. They fit pole or flat surfaces using keyhole slots.

Quarter Turn Latches

Quarter turns are utilized to secure the door.

Wind Catches

A wind catch is provided to prevent the door from slamming shut (or open) due to high wind conditions.

Safety Disconnect Handle

Up to three padlocks can be used to lock the disconnect in the OFF position. Maintenance work can be performed without hazard to personnel.

External Reset

The overload relay may be quickly reset by means of a button on the front of the enclosure.

Bold Pilot Legend

Provides positive indication of the selector switch position for use to stop the pump motor.

Ground Lugs

Insures proper connecting of ground wires and lightning arresters.

UL Listed

Assures proper construction throughout control panel.

Reduced Voltage

Available in part winding, wye delta and auto transformer types, these controls may be necessary where the power company limits the amount of current drawn from its lines, or where starting torque must be reduced.

Fully gasketed NEMA 3/12 weather-proof enclosures are supplied with Class 88 reduced voltage starters.

Part Winding Starters apply starting current in timed steps to minimize voltage fluctuations.

Auto Transformer Starters maintain a closed circuit during transition and eliminate voltage or current surges. They draw less current than part winding starters and are well suited for starting motors over 20 Hp.

Wye Delta starters and motors are used in areas where the power supply is inadequate to supply full starting current without objectionable voltage drop or for applications where low starting torque is required. Centrifugal pumps and similar apparatus requiring a low starting torque are typical applications. Both ends of all three windings of the wye delta motor are brought out so that they may be accessible for reconnecting from wye to delta.

Auxiliary Equipment

Pilot Lights are easily installed on the enclosure. Oil Tight and Heavy Duty, they meet NEMA A600 requirements.

Lightning Arresters protect the control panel from lightning induced surges.

Undervoltage and Phase Sensing Relays protect the pump against low voltage, voltage imbalance, loss of phase and phase reversal.

Anti-Backspin Timers prevent the motor from starting during motor/shaft backspin.

The TOX Box

Siemens uses the TOX process to manufacture the enclosures for the pump panels.

Advantages of the TOX process:

- Joints are 50-70% stronger
- Since the TOX process compresses the metal at the joint, it does not leave the high stresses in the metal
- Increased corrosion resistance. The protective layer on the metal is not damaged in the process, but instead flows with the material

Class 87 NEMA Vacuum Starter Pump Control Panels

The Siemens vacuum starter pump controllers are designed for the harshest environments. Typical environments include chemical, petrochemical, waste water treatment and mining. Contaminations present in these severe environments are detrimental to conventional air-break contacts decreasing their life expectancy and reliability. The Siemens vacuum starter pump controllers are well suited for these environments because the contacts are contained in hermetically sealed contact tubes. This prevents contaminates in the atmosphere from affecting the operation of the contacts. Additionally, neither arcs nor arcing gases are produced which dramatically increases the electrical endurance of the contacts.

Standard Pump Panel with Solid State Overload, Class 87

Selection

Ordering Information

- Field Modification Kits see page 9/104.
- Factory Modifications see page 9/119.
- Dimensions see page 9/169.
- Wiring Diagrams see page 9/187.
- Replacement Parts see page 9/131.
- Sizes 1-4 will be supplied standard with a 240/480 volt coil. To change the coil voltage, change the 8th character in the catalog number to the letter shown in the coil table.
- Sizes 5 & 6 will be supplied standard with a 480 volt coil. To change the coil voltage, change the 8th character in the catalog number to the letter shown in the coil table.

Coil Table

60Hz Voltage	Letter
24	J
120	F
110–120/220–240	A①
200–208	D
220–240	G
220–240/440–480	C①
277	L
440–480	H
550–600	E

Fusible Disconnect

Max Hp 200 Volts	230 Volts	460 Volts	575 Volts	NEMA Size	Half Size	Overload Amp Range	Frame Size	Disc. Amp Range	Fuse Clip Amp / Volts	Catalog Number	List Price $
—	—	1	1	1	—	0.75–3.4②	A	30	30A/600V	**87DUB6FC**	
—	—	5	5	1	—	3–12	A1	30	30A/600V	**87DUC6FC**	
—	—	10	10	1	—	5.5–22	A1	30	30A/600V	**87DUD6FC**	
—	—	10	10	1	—	5.5–22	A1	60	60A/600V	**87DUD60C**	
—	—	15	15	—	1¾	10–40	A1	30	30A/600V	**87EUE6FC**	
—	—	15	15	—	1¾	10–40	A1	60	60A/600V	**87EUE60C**	
—	—	25	25	2	—	13–52	B	60	60A/600V	**87FUF6FC**	
—	—	25	25	2	—	13–52	B	100	100A/600V	**87FUF60C**	
—	—	30	30	—	2½	25–100	B	60	60A/600V	**87GUG6FC**	
—	—	30	30	—	2½	25–100	B	100	100A/600V	**87GUG60C**	
—	—	50	50	3	—	25–100	B	100	100A/600V	**87HUG6FC**	
—	—	50	50	3	—	25–100	B	200	200A/600V	**87HUG60C**	
—	—	75	75	—	3½	50–200	B	200	200A/600V	**87IUH6FC**	
—	—	100	100	4	—	50–200	B	200	200A/600V	**87JUH6FC**	
—	—	200	200	5	—	55–250	—	400	400A/600V	**87LPU6FH**	
—	—	250	—	6	—	160–630	—	600	600A/600V	**87MSW6FH**	
2	2	—	—	1	—	3–12	A1	30	30A/250V	**87DUC6LC**	
3	3	—	—	1	—	5.5–22	A1	30	30A/250V	**87DUD6LC**	
7½	7½	—	—	1	—	10–40	A1	30	30A/250V	**87DUE6LC**	
7½	7½	—	—	1	—	10–40	A1	60	60A/250V	**87DUE6PC**	
10	10	—	—	—	1¾	10–40	A1	60	60A/250V	**87EUE6LC**	
10	15	—	—	2	—	13–52	B	60	60A/250V	**87FUF6LC**	
10	15	—	—	2	—	13–52	B	100	100A/250V	**87FUF6PC**	
15	20	—	—	—	2½	25–100	B	60	60A/250V	**87GUG6LC**	
15	20	—	—	—	2½	25–100	B	100	100A/250V	**87GUG6PC**	
20	30	—	—	3	—	25–100	B	100	100A/250V	**87HUG6LC**	
25	30	—	—	3	—	25–100	B	200	200A/250V	**87HUG6PC**	
30	40	—	—	—	3½	50–200	B	200	200A/250V	**87IUH6LC**	
40	50	—	—	4	—	50–200	B	200	200A/250V	**87JUH6LC**	
75	100	—	—	5	—	55–250	—	400	400A/250V	**87LPU6LG**	

Circuit Breaker

Max Hp 200 Volts	230 Volts	460 Volts	575 Volts	NEMA Size	Half Size	Overload Amp Range	Frame Size	Motor Circuit Interrupter ETI Amps	Catalog Number	List Price $
½	½	1	1	1	—	0.75–3.4②	A	3	**87DUB6MC**	
2	2	5	5	1	—	3–12	A1	10	**87DUC6MC**	
3	3	10	10	1	—	5.5–22	A1	25	**87DUD6MC**	
7½	7½	10	—	1	—	10–40	A1	30	**87DUE6MC**	
—	—	15	15	—	1¾	10–40	A1	40	**87EUE6MC**	
10	15	25	25	2	—	13–52	B	50	**87FUF6MC**	
15	20	30	30	—	2½	25–100	B	100	**87GUG6MC**	
25	30	50	50	3	—	25–100	B	100	**87HUG6MC**	
30	40	75	75	—	3½	50–200	B	125	**87IUH6MC**	
40	50	100	100	4	—	50–200	B	150	**87JUH6MC**	
50	75	150	200	5	—	55–250	—	250	**87LPT6MH**	
75	100	200	200	5	—	55–250	—	400	**87LPU6MH**	
100	125	250	300	6	—	160–630	—	400	**87MSW6MH**	
150	200	400	400	6	—	160–630	—	600	**87MSX6MH**	

Note: All starter sizes carry one maximum Hp rating (per the National Electric Code).

① Not available on Size 5 and larger.
② For an overload amp range of 0.25-1A, change the 5th character from a 'B' to an 'A'.
③ A version with coil code A is also stocked via Controls Express.

Pump Panel with Ambient Compensated Bimetal Overload, Class 87

Selection

Ordering Information

- Heater elements for bimetal overloads see page 9/124 (3-Required).
- Field Modification Kits see page 9/104.
- Factory Modifications see page 9/119.
- Dimensions see page 9/169.
- Wiring Diagrams see page 9/187.
- Replacement Parts see page 9/131.
- Sizes 1-4 will be supplied standard with a 230/480 volt coil. To change the coil voltage, change the 8th character in the catalog number to the letter shown in the coil table.
- Sizes 5 & 6 will be supplied standard with a 480 volt coil. To change the coil voltage, change the 8th character in the catalog number to the letter shown in the coil table.

Coil Table

60Hz Voltage	Letter
24	J
120	F
110–120/220–240	A①
200–208	D
220–240	G
220–240/440–480	C①
277	L
440–480	H
550–600	E

Fusible Disconnect

Max HP 200V	230V	460V	575V	NEMA Size	Half Size	Disc Amp Rating	Fuse Clip Amps/Volts	Catalog Number	List Price $
—	—	10	10	1	—	30	30A/600V	**87DAE6FC**	
—	—	10	10	1	—	60	60A/600V	**87DAE60C**	
—	—	15	15	—	1¾	30	30A/600V	**87EAF6FC**	
—	—	15	15	—	1¾	60	60A/600V	**87EAF60C**	
—	—	25	25	2	—	60	60A/600V	**87FAJ6FC**	
—	—	25	25	2	—	100	100A/600V	**87FAJ60C**	
—	—	30	30	—	2½	60	60A/600V	**87GAK6FC**	
—	—	30	30	—	2½	100	100A/600V	**87GAK60C**	
—	—	50	50	3	—	100	100A/600V	**87HAN6FC**	
—	—	50	50	3	—	200	200A/600V	**87HAN60C**	
—	—	75	75	—	3½	200	200A/600V	**87IAP6FC**	
—	—	100	100	4	—	200	200A/600V	**87JAR6FC**	
7½	7½	—	—	1	—	30	30A/250V	**87DAE6LC**	
7½	7½	—	—	1	—	60	60A/250V	**87DAE6PC**	
10	10	—	—	—	1¾	60	60A/250V	**87EAG6LC**	
10	15	—	—	2	—	60	60A/250V	**87FAJ6LC**	
10	15	—	—	2	—	100	100A/250V	**87FAJ6PC**	
15	20	—	—	—	2½	100	100A/250V	**87GAL6LC**	
25	30	—	—	3	—	100	100A/250V	**87HAN6LC**	
25	30	—	—	3	—	200	200A/250V	**87HAN6PC**	
30	40	—	—	—	3½	200	200A/250V	**87IAP6LC**	
40	50	—	—	4	—	200	200A/250V	**87JAR6LC**	

Circuit Breaker

Max HP 200V	230V	460V	575V	NEMA Size	Half Size	Motor Circuit Interrupter ETI Amps	Catalog Number	List Price $
½	½	1	1	1	—	3	**87DAA6MC**	
1	1	3	3	1	—	10	**87DAB6MC**	
3	3	7½	7½	1	—	25	**87DAD6MC**	
7½	7½	10	10	1	—	30	**87DAE6MC**	
7½	7½	15	15	—	1¾	40	**87EAF6MC**	
10	10	—	—	—	1¾	50	**87EAG6MC**	
—	—	15	20	2	—	40	**87FAH6MC**	
10	15	25	25	2	—	50	**87FAJ6MC**	
—	—	30	30	—	2½	50	**87GAK6MC**	
15	20	—	—	—	2½	100	**87GAL6MC**	
25	30	50	50	3	—	100	**87HAN6MC**	
30	40	75	75	—	3½	125	**87IAP6MC**	
40	50	100	100	4	—	150	**87JAR6MC**	

Note: Hp's shown above are based on the overload amp range for the FLA's (per the National Electric Code) of typical industrial motors. All starter sizes carry one maximum Hp rating.

① Not available on Size 5 or above.

Vacuum Break and Oil Well Pump Control Panels, Class 87

Selection

Ordering Information

- Field Modification Kits see page 9/104.
- Factory Modifications see page 9/119.
- Dimensions see page 9/169.
- Wiring Diagrams see page 9/187.
- Replacement Parts see page 9/131.
- Replace the (*) in the catalog number with a letter from the coil table.
- Refer to page 9/47 for information on the 958L OLR

Coil Table

60Hz Voltage	Letter
24	J
120	F
200–208	D
220–240	G
277	L
440–480	H
550–600	E

Vacuum Break Pump Control Panels (Vacuum Contactor with Trip Class 10 Solid-State Overload Relay)

Max Hp				Fusible Disconnect			Circuit Breaker		
480 Volts	575 Volts	NEMA Size	Overload Relay Range	Fuse Clip Amps/Volts	Catalog Number	List Price $	MCI Amps	Catalog Number	List Price $
100	100	4	55-250A	200A/600V	**87JCM4F***		250A	**87JCM4M***	
200	200	5	55-250A	400A/600V	**87LCU4F***		400A	**87LCT4M***	
250	300	6	160-630A	—	—		400A	**87MCW4M***	
400	400	6	160-630A	—	—		600A	**87MCX4M***	

Oil Well Pump Control Panels (Open Air Contactor with 958L Solid-State Overload Relay)

Max Hp				Fusible Disconnect			Circuit Breaker		
480 Volts	575 Volts	NEMA Size	Overload Relay Range	Fuse Clip Amps/Volts	Catalog Number	List Price $	MCI Amps	Catalog Number	List Price $
25	25	2	13-52	60A/600V	**87FPI6F***		50	**87FPI6M***	
50	50	3	25-100	100A/600V	**87HPK6F***		100	**87HPK6M***	
100	100	4	50-200	200A/600V	87JPM6F*		150	**87JPM6M***	

Note: Hp's shown above are based on the overload amp range for the FLA's (per the National Electric Code) of typical industrial motors. All starter sizes carry one maximum Hp rating.

Auto Transformer & Part winding (2 Step) with Solid State Overload, Class 88

Selection

Ordering Information

- ► Field Modification Kits see page 9/104.
- ► Factory Modifications see page 9/119.
- ► Dimensions see page 9/169.
- ► Wiring Diagrams see pages 9/180 and 9/181.
- ► Replacement Parts see page 9/131.

Coil and Control Voltage

The coil voltage on the contactors will be the motor voltage. A CPT will be supplied to provide the control voltage. The control voltage will be 120V.
To change the control voltage to customer supplied (no CPT included), change the 9th character to the following:
for 24V , use "J"
for 120V, use "F"

Auto Transformer Type

		Overload				Fusible Disconnect			Circuit Breaker		
Motor Voltage	Max Hp	Amp Range	Frame Size	NEMA Size	Half Size	Fuse Clip Size Amps/Volts	Catalog Number	List Price $	Circuit Breaker Amps	Catalog Number	List Price $
230	15	13–52	B	2	—	60A/250V	**88FUFT2FG**		50	**88FUFT2MG**	
	20	25–100	B	—	2½	100A/250V	**88GUGT2FG**		100	**88GUGT2MG**	
	30	25–100	B	3	—	100A/250V	**88HUGT2FG**		100	**88HUGT2MG**	
	40	50–200	B	—	3½	200A/250V	**88IUHT2FG**		125	**88IUHT2MG**	
	50	50–200	B	4	—	200A/250V	**88JUHT2FG**		150	**88JUHT2MG**	
	75	55–250	—	5	—	—	**—**		250	**88LPST2MG**	
	100	55–250	—	5	—	400A/250V	**88LPUT2FG**		400	**88LPUT2MG**	
	200	160–630	—	6	—	—	**—**		600	**88MSXT2MG**	
460	25	13–52	B	2	—	60A/600V	**88FUFT4FH**		50	**88FUFT4MH**	
	30	25–100	B	—	2½	60A/600V	**88GUGT4FH**		50	**88GUGT4MH**	
	50	25–100	B	3	—	100A/600V	**88HUGT4FH**		100	**88HUGT4MH**	
	75	50–200	B	—	3½	200A/600V	**88IUHT4FH**		125	**88IUHT4MH**	
	100	50–200	B	4	—	200A/600V	**88JUHT4FH**		150	**88JUHT4MH**	
	150	55–250	—	5	—	—	**—**		250	**88LPST4MH**	
	200	55–250	—	5	—	400A/600V	**88LPST4FH**		400	**88LPUT4MH**	
	250	160–630	—	6	—	—	**—**		400	**88MSVT4MH**	
	400	160–630	—	6	—	600A/600V	**88MSXT4FH**		600	**88MSXT4MH**	

Part Winding 2 Step

		Overload				Fusible Disconnect			Circuit Breaker		
Motor Voltage	Max Hp	Amp Range	Frame Size	NEMA Size	Half Size	Fuse Clip Size Amps/Volts	Catalog Number	List Price $	Circuit Breaker Amps	Catalog Number	List Price $
230	20	10–40	A1	—	1¾	100A/250V	**88EUEP2FG**		100	**88EUEP2MG**	
	25	13–52	B	2	—	100A/250V	**88FUFP2FG**		100	**88FUFP2MG**	
	40	25–100	B	—	2½	200A/250V	**88GUGP2FG**		100	**88GUGP2MG**	
	50	25–100	B	3	—	200A/250V	**88HUGP2FG**		150	**88HUGP2MG**	
	60	50–200	B	—	3½	200A/250V	**88IUHP2FG**		250	**88IUHP2MG**	
	75	50–200	B	4	—	400A/250V	**88JUHP2FG**		250	**88JUHP2MG**	
	125	55–250	—	5	—	—	**—**		400	**88LPSP2MG**	
	150	55–250	—	5	—	600A/250V	**88LPUP2FG**		600	**88LPUP2MG**	
460	30	10–40	A1	—	1¾	100A/600V	**88EUEP4FH**		100	**88EUEP4MH**	
	40	13–52	B	2	—	100A/600V	**88FUFP4FH**		100	**88FUFP4MH**	
	60	25–100	B	—	2½	200A/600V	**88GUGP4FH**		100	**88GUGP4MH**	
	75	25–100	B	3	—	200A/600V	**88HUGP4FH**		150	**88HUGP4MH**	
	100	50–200	B	—	3½	200A/600V	**88IUHP4FH**		250	**88IUHP4MH**	
	150	50–200	B	4	—	400A/600V	**88JUHP4FH**		250	**88JUHP4MH**	
	250	55–250	—	5	—	—	**—**		400	**88LPSP4MH**	
	350	55–250	—	5	—	600A/600V	**88LPUP4FH**		600	**88LPUP4MH**	

Note: All starter sizes carry one maximum Hp rating (per the National Electric Code).

Wye Delta with Solid State Overload, Class 88

Selection

Ordering Information

- ► Field Modification Kits see page 9/104.
- ► Factory Modifications see page 9/119.
- ► Dimensions see page 9/169.
- ► Wiring Diagrams see pages 9/182 and 9/183.
- ► Replacement Parts see page 9/131.

Coil and Control Voltage

The coil voltage on the contactors will be the motor voltage. A CPT will be supplied to provide the control voltage. The control voltage will be 120V.
To change the control voltage to customer supplied (no CPT included), change the 9th character to the following:

for 24V , use "J"

for 120V, use "F"

Wye Delta

Motor Voltage	Max Hp	Overload Amp Range	Overload Frame Size	NEMA Size	Half Size	Fuse Clip Size Amps/Volts	Motor Circuit Interruter ETI Amps	Open Transition Fusible Disconnect Catalog Number	Open Transition Fusible Disconnect List Price $	Open Transition Circuit Breaker Catalog Number	Open Transition Circuit Breaker List Price $	Closed Transition Fusible Disconnect Catalog Number	Closed Transition Fusible Disconnect List Price $	Closed Transition Circuit Breaker Catalog Number	Closed Transition Circuit Breaker List Price $
200	10	10–40	A1	1	—	60A/250V	50	**88DUE06FD**		**88DUE06MD**		**88DUEC6FD**		**88DUEC6MD**	
	15	10–40	A1	—	1¾	100A/250V	100	**88EUE06FD**		**88EUE06MD**		**88EUEC6FD**		**88EUEC6MD**	
	20	13–52	B	2	—	100A/250V	100	**88FUF06FD**		**88FUF06MD**		**88FUFC6FD**		**88FUFC6MD**	
	30	25–100	B	—	2½	200A/250V	125	**88GUG06FD**		**88GUG06MD**		**88GUGC6FD**		**88GUGC6MD**	
	40	25–100	B	3	—	200A/250V	150	**88HUG06FD**		**88HUG06MD**		**88HUGC6FD**		**88HUGC6MD**	
	50	50–200	B	—	3½	200A/250V	250	**88IUH06FD**		**88IUH06MD**		**88IUHC6FD**		**88IUHC6MD**	
	60	50–200	B	4	—	400A/250V	250	**88JUH06FD**		**88JUH06MD**		**88JUHC6FD**		**88JUHC6MD**	
	75	55–250	—	5	—	400A/250V	400	**88LPS06FD**		**88LPS06MD**		**88LPSC6FD**		**88LPSC6MD**	
	150	55–250	—	5	—	600A/250V	600	**88LPU06FD**		**88LPU06MD**		**88LPUC6FD**		**88LPUC6MD**	
	300	160–630	—	6	—	—	800	—		**88MSX06MD**		—		**88MSXC6MD**	
230	10	10–40	A1	1	—	60A/250V	50	**88DUE02FG**		**88DUE02MG**		**88DUEC2FG**		**88DUEC2MG**	
	15	10–40	A1	—	1¾	60A/250V	50	**88EUE02FG**		**88EUE02MG**		**88EUEC2FG**		**88EUEC2MG**	
	25	13–52	B	2	—	100A/250V	100	**88FUF02FG**		**88FUF02MG**		**88FUFC2FG**		**88FUFC2MG**	
	30	25–100	B	—	2½	200A/250V	100	**88GUG02FG**		**88GUG02MG**		**88GUGC2FG**		**88GUGC2MG**	
	50	25–100	B	3	—	200A/250V	150	**88HUG02FG**		**88HUG02MG**		**88HUGC2FG**		**88HUGC2MG**	
	60	50–200	B	—	3½	200A/250V	250	**88IUH02FG**		**88IUH02MG**		**88IUHC2FG**		**88IUHC2MG**	
	75	50–200	B	4	—	400A/250V	250	**88JUH02FG**		**88JUH02MG**		**88JUHC2FG**		**88JUHC2MG**	
	100	55–250	—	5	—	400A/250V	400	**88LPS02FG**		**88LPS02MG**		**88LPSC2FG**		**88LPSC2MG**	
	150	55–250	—	5	—	600A/250V	600	**88LPU02FG**		**88LPU02MG**		**88LPUC2FG**		**88LPUC2MG**	
	350	160–630	—	6	—	—	1200	—		**88MSX02MG**		—		**88MSXC2MG**	
460	15	5.5-22	A1	1	—	30A/600V	30	**88DUD04FH**		**88DUD04MH**		**88DUDC4FH**		**88DUDC4MH**	
	30	10–40	A1	—	1¾	60A/600V	50	**88EUE04FH**		**88EUE04MH**		**88EUEC4FH**		**88EUEC4MH**	
	40	13–52	B	2	—	100A/600V	100	**88FUF04FH**		**88FUF04MH**		**88FUFC4FH**		**88FUFC4MH**	
	60	25–100	B	—	2½	200A/600V	100	**88GUG04FH**		**88GUG04MH**		**88GUGC4FH**		**88GUGC4MH**	
	75	25–100	B	3	—	200A/600V	125	**88HUG04FH**		**88HUG04MH**		**88HUGC4FH**		**88HUGC4MH**	
	100	50–200	B	—	3½	200A/600V	150	**88IUH04FH**		**88IUH04MH**		**88IUHC4FH**		**88IUHC4MH**	
	150	50–200	B	4	—	400A/600V	250	**88JUH04FH**		**88JUH04MH**		**88JUHC4FH**		**88JUHC4MH**	
	200	55–250	—	5	—	400A/600V	400	**88LPS04FH**		**88LPS04MH**		**88LPSC4FH**		**88LPSC4MH**	
	300	55–250	—	5	—	600A/600V	600	**88LPU04FH**		**88LPU04MH**		**88LPUC4FH**		**88LPUC4MH**	
	700	160–630	—	6	—	—	1200	—		**88MSX04MH**		—		**88MSXC4MH**	
575	15	5.5-22	A1	1	—	30A/600V	30	**88DUD05FE**		**88DUD05ME**		**88DUDC5FE**		**88DUDC5ME**	
	30	10–40	A1	—	1¾	60A/600V	50	**88EUE05FE**		**88EUE05ME**		**88EUEC5FE**		**88EUEC5ME**	
	40	13–52	B	2	—	100A/600V	50	**88FUF05FE**		**88FUF05ME**		**88FUFC5FE**		**88FUFC5ME**	
	60	25–100	B	—	2½	200A/600V	100	**88GUG05FE**		**88GUG05ME**		**88GUGC5FE**		**88GUGC5ME**	
	75	25–100	B	3	—	200A/600V	125	**88HUG05FE**		**88HUG05ME**		**88HUGC5FE**		**88HUGC5ME**	
	100	50–200	B	—	3½	200A/600V	150	**88IUH05FE**		**88IUH05ME**		**88IUHC5FE**		**88IUHC5ME**	
	150	50–200	B	4	—	400A/600V	250	**88JUH05FE**		**88JUH05ME**		**88JUHC5FE**		**88JUHC5ME**	
	200	55–250	—	5	—	400A/600V	400	**88LPS05FE**		**88LPU05ME**		**88LPSC5FE**		**88LPSC5ME**	
	300	55–250	—	5	—	600A/600V	400	**88LPU05FE**		**88LPU05ME**		**88LPUC5FE**		**88LPUC5ME**	
	700	160–630	—	6	—	—	1200	—		**88MSX05ME**		—		**88MSXC5ME**	

Note: All starter sizes carry one maximum Hp rating (per the National Electric Code).

Electrically Held Lighting Contactors, Class LE

Features

Simplicity and compact lightweight design makes Class LE lighting contactors an attractive solution to your budgeting challenges.

- Used in applications where it is not critical that contacts remain closed if control power is lost
- Rated for tungsten lighting (incandescent filament), ballast lighting (fluorescent, HID, metal halide, mercury vapor, quartz halogen and sodium-lamp), resistive and general use loads
- Contacts are rated 20 - 400 amps at 600 volts
- 3 and 4 pole (up to 12 pole for 30 and 60 amp contactors)
- Most contactors have built-in auxiliary contacts for convenient 3-wire control
- Wide range of coil voltages from 24 to 600 VAC 50/60Hz
- Compact design allows for smaller panels and more wiring room
- Finger and back-of-hand safe terminals
- Panel and DIN rail mounting
- Full line of enclosures including NEMA 1, 3/3R, 4, 4/4X stainless steel and 12
- Available in combination form with choice of non-fusible disconnect, fusible disconnect or circuit breaker
- Full line of factory and field modifications

Electrically Held Lighting Contactors, Class LE

Features

Catalog Numbering System

LE [ ] [ ] [ ] [ ] 0 [ ] [ ] [ ]

Disconnect Type
B = Combination Circuit Breaker
D = Combination Non-Fused Disconnect
F = Combination Fusible Disconnect
N = Non-Combination

Disconnect Rating
0 = N/A
A = 30A/250V Disconnect
B = 30A/600V Disconnect
C = 60A/250V Disconnect
D = 60A/600V Disconnect
E = 100A/250V Disconnect
F = 100A/600V Disconnect
G = 200A/250V Disconnect
H = 200A/600V Disconnect
J = 400A/250V Disconnect
K = 400A/600V Disconnect
T = 20A Circuit Breaker
V = 30A Circuit Breaker
Y = 60A Circuit Breaker
Z = 100A Circuit Breaker

Enclosure Type
0 = Open
1 = NEMA 1
2 = NEMA 12/3R
4 = NEMA 4/4X SS

Contactor Rating (Amp)
B = 20
C = 30
D = 60
E = 100
F = 200
G = 300
H = 400

N.C. Poles
0 = None

N.O. Poles
03 = Three
04 = Four
06 = Six
09 = Nine
12 = Twelve

Coil Voltage (AC 60Hz)
024 = 24
120 = 120
208 = 208
240 = 240
277 = 277
347 = 347
480 = 480
600 = 600

Series
A = 200 – 400A Contactors
B = 20 – 100A Contactors

Electrically Held Lighting Contactors, Class LE

Selection

Ordering Information

- Replace *** with a number from the coil table.
- Field Modification Kits see page 9/104.
- Factory Modifications see page 9/119.
- Dimensions see page 9/149 for open, page 9/170 for enclosed.
- Wiring Diagram see page 9/188.
- Replacement Parts see page 9/134.

Coil Table

VAC 60Hz	***
24	024
120	120
208	208
240	240
277	277
347 ①	347
480	480
600	600

Replace the (***) with a number from the coil table.

Non-Combination Contactor

Max. Amp Rating	Number of Poles	Normally Closed Contacts	Normally Open Contacts	Enclosure Type			
				Open	1	3/3R/12	4/4X 304 S.S.
				Catalog Number			
20	3	0	3	LEN00B003***B	LEN01B003***B	LEN02B003***B	LEN04B003***B
	4	0	4	LEN00B004***B	LEN01B004***B	LEN02B004***B	LEN04B004***B
30	3	0	3	LEN00C003***B	LEN01C003***B	LEN02C003***B	LEN04C003***B
	4	0	4	LEN00C004***B	LEN01C004***B	LEN02C004***B	LEN04C004***B
	6	0	6	LEN00C006***B	LEN01C006***B	LEN02C006***B	LEN04C006***B
	9	0	9	LEN00C009***B	LEN01C009***B	LEN02C009***B	LEN04C009***B
	12	0	12	LEN00C012***B	LEN01C012***B	LEN02C012***B	LEN04C012***B
60	3	0	3	LEN00D003***B	LEN01D003***B	LEN02D003***B	LEN04D003***B
	6	0	6	LEN00D006***B	LEN01D006***B	LEN02D006***B	LEN04D006***B
	9	0	9	LEN00D009***B	LEN01D009***B	LEN02D009***B	LEN04D009***B
	12	0	12	LEN00D012***B	LEN01D012***B	LEN02D012***B	LEN04D012***B
100	3	0	3	LEN00E003***B	LEN01E003***B	LEN02E003***B	LEN04E003***B
200	3	0	3	LEN00F003***A	LEN01F003***A	LEN02F003***A	LEN04F003***A
300	3	0	3	LEN00G003***A	LEN01G003***A	LEN02G003***A	LEN04G003***A
400	3	0	3	LEN00H003***A	LEN01H003***A	LEN02H003***A	LEN04H003***A

① Not available on 200 - 400A contactors.

Electrically Held Lighting Contactors, Class LE

Technical

Contactor	LEN00B003	LEN00B004	LEN00C003	LEN00C004
General technical data:				
Finger-safe (main circuit / control circuit)	yes / yes	yes / yes	yes / yes	yes / yes
Degree of pollution	3	3	3	3
Altitude (m)	2,000	2,000	2,000	2,000
Ambient storage temperature (°C)	-55 to 80	-55 to 80	-55 to 80	-55 to 80
Ambient operating temperature (°C)	0 to 40	0 to 40	0 to 40	0 to 40
Humidity (% non-condensing)	10 to 95	10 to 95	10 to 95	10 to 95
Shock resistance at rectangular impulse (g/ms)	6.7 / 5, 4.2 / 10	6.7 / 5, 4.2 / 10	7.5 / 5, 4.7 / 10	7.5 / 5, 4.7 / 10
Shock resistance at sine pulse (g/ms)	10.5 / 5, 6.6 / 10	10.5 / 5, 6.6 / 10	11.8 / 5, 7.4 / 10	11.8 / 5, 7.4 / 10
Rated impulse voltage resistance (kV)	no data	no data	no data	no data
Rated insulation voltage (V)	no data	no data	no data	no data
Mechanical operating cycles as operating time:				
of contactor	30,000,000	30,000,000	10,000,000	10,000,000
of contactor with additional aux contacts	10,000,000	10,000,000	10,000,000	10,000,000
Main circuit:				
Number of NC / NO main contacts	0NC / 3NO	0NC / 4NO	0NC / 3NO	0NC / 4NO
Typical power loss per conductor (W)	0.7	0.7	0.9	0.9
Off-load operating frequency (cycles per hour)	10,000	10,000	5,000	5,000
Current ratings:				
Tungsten (poles per phase)	**20A @277V 1p 1ph 20A @480V 2p 1ph 20A @480V 3p 3ph**	**20A @277V 1p 1ph 20A @480V 2p 1ph 20A @480V 3p 3ph**	**30A @277V 1p 1ph 30A @480V 2p 1ph 30A @480V 3p 3ph**	**30A @277V 1p 1ph 30A @480V 2p 1ph 30A @480V 3p 3ph**
Ballast (poles per phase)	**20A @347V 1p 1ph 20A @600V 2p 1ph 20A @600V 3p 3ph**	**20A @347V 1p 1ph 20A @600V 2p 1ph 20A @600V 3p 3ph**	**30A @347V 1p 1ph 30A @600V 2p 1ph 30A @660V 3p 3ph**	**30A @347V 1p 1ph 30A @600V 2p 1ph 30A @600V 3p 3ph**
General and resistive (poles per phase)	**20A @600V 1p 1ph 20A @600V 2p 1ph 20A @600V 3p 3ph**	**20A @600V 1p 1ph 20A @600V 2p 1ph 20A @600V 3p 3ph**	**30A @600V 1p 1ph 30A @600V 2p 1ph 30A @600V 3p 3ph**	**30A @600V 1p 1ph 30A @600V 2p 1ph 30A @600V 3p 3ph**
Coil ratings:				
Nominal voltage	2)	2)	2)	2)
Inrush / sealed power (VA)	31.7 / 4.8	31.7 / 4.8	87 / 9.4	87 / 9.4
Coil voltage tolerance factor	0.8 - 1.1	0.8 - 1.1	0.8 - 1.1	0.8 - 1.1
Internal/standard auxiliary contact:				
Number of NC / NO auxiliary contacts	0NC / 1NO	NA①	1NC / 1NO	1NC / 1NO
Rating	A600 / Q600	NA	A600 / Q600	A600 / Q600
Installation/mounting/dimensions:				
Mounting orientation	vertical	vertical	vertical	vertical
Type of mounting: screw / DIN rail	yes / yes	yes / yes	yes / yes	yes / yes
Height x Width x Depth (mm)	57.5 x 45 x 73	57.5 x 45 x 73	85 x 45 x 97	85 x 60 x 97
Minimum clearance to sides (mm)	0	0	0	0
Minimum clearance to earthed parts (mm)	6	6	6	6
Connection type / torque for main circuit terminals	screw / 7-10 lb in	screw / 7-10 lb in	screw / 18-22 lb in	screw / 18-22 lb in
Connection type / torque for control circuit terminals	screw / 7-10 lb in	screw / 7-10 lb in	screw / 7-10 lb in	screw / 7-10 lb in
Solid and stranded conductors for main contacts (AWG)	2x(20-16), 2x(18-14), 2x(12)	2x(20-16), 2x(18-14), 2x(12)	2x(6-12), 2x(14-8)	2x(6-12), 2x(14-8)
Solid and stranded conductors for control circuit (AWG)	2x(20-16), 2x(18-14)	2x(20-16), 2x(18-14)	2x(20-16), 2x(18-14)	2x(20-16), 2x(18-14)
Conductor type for main and control circuits	75°C CU	75°C CU	75°C CU	75°C CU
Short circuit current rating of main circuit:				
Short circuit current rating	5kA @ 600V	5kA @ 600V	5kA @ 600V	5kA @ 600V
Max fuse / circuit breaker (Amp)	30 / 25	30 / 25	60 / 40	60 / 40
Certificates:	**cULus**	**cULus**	**cULus**	**cULus**

① Must use an external (optional) auxiliary contact.
2) Refer to catalog selection tables for coil voltages.

Electrically Held Lighting Contactors, Class LE

Technical

LEN00D003	LEN00E003	LEN00F003	LEN00G003	LEN00H003
no / yes	no / yes	no / yes	no / yes	no / yes
3	3	3	3	3
2,000	2,000	2,000	2,000	2,000
-55 to 80	-55 to 80	-55 to 80	-55 to 80	-55 to 80
0 to 40	0 to 40	0 to 40	0 to 40	0 to 40
10 to 95	10 to 95	10 to 95	10 to 95	10 to 95
10 / 5, 5 / 10	6.8 / 5, 4 / 10	8.5 / 5, 4.2 / 10	8.5 / 5, 4.2 / 10	8.5 / 5, 4.2 / 10
15 / 5, 8 / 10	10.6 / 5, 6.2 / 10	13.4 / 5, 6.5 / 10	13.4 / 5, 6.5 / 10	13.4 / 5, 6.5 / 10
no data	no data	no data	no data	no data
no data	no data	no data	no data	no data
Mechanical operating cycles as operating time:				
10,000,000	10,000,000	10,000,000	10,000,000	10,000,000
10,000,000	10,000,000	10,000,000	10,000,000	10,000,000
Main circuit:				
0NC / 3NO	0NC / 3NO	0NC / 3NO	0NC / 3NO	0NC / 3NO
2.6	7.7	13	18	35
5,000	5,000	2,000	2,000	2,000
Current ratings:				
60A @277V 1p 1ph 60A @480V 2p 1ph 60A @480V 3p 3ph	**100A @277V 1p 1ph 100A @480V 2p 1ph 100A @480V 3p 3ph**	**200A @277V 1p 1ph 200A @480V 2p 1ph 200A @480V 3p 3ph**	**300A @277V 1p 1ph 300A @480V 2p 1ph 300A @480V 3p 3ph**	**400A @277V 1p 1ph 400A @480V 2p 1ph 400A @480V 3p 3ph**
60A @600V 1p 1ph 60A @600V 2p 1ph 60A @600V 3p 3ph	**100A @600V 1p 1ph 100A @600V 2p 1ph 100A @600V 3p 3ph**	**200A @600V 1p 1ph 200A @600V 2p 1ph 200A @600V 3p 3ph**	**300A @600V 1p 1ph 300A @600V 2p 1ph 300A @600V 3p 3ph**	**400A @600V 1p 1ph 400A @600V 2p 1ph 400A @600V 3p 3ph**
60A @600V 1p 1ph 60A @600V 2p 1ph 60A @600V 3p 3ph	**100A @600V 1p 1ph 100A @600V 2p 1ph 100A @600V 3p 3ph**	**200A @600V 1p 1ph 200A @600V 2p 1ph 200A @600V 3p 3ph**	**300A @600V 1p 1ph 300A @600V 2p 1ph 300A @600V 3p 3ph**	**400A@600V 1p 1ph 400A @600V 2p 1ph 400A @600V 3p 3ph**
Coil ratings:				
2)	2)	2)	2)	2)
166 / 12.6	300 / 21	300 / 5.8	590 / 6.7	830 / 9.2
0.8 - 1.1	0.8 - 1.1	0.8 - 1.1	0.8 - 1.1	0.8 - 1.1
Internal/standard auxiliary contact:				
NA①	NA ①	2NC / 2NO	2NC / 2NO	2NC / 2NO
NA	NA	A300 / Q300	A300 / Q300	A300 / Q300
Installation/mounting/dimensions:				
vertical	vertical	vertical	vertical	vertical
yes / yes	yes / yes	yes / no	yes / no	yes / no
112 x 55 x 115	146 x 70 x 139	172 x 120 x 180	210 x 145 x 202	214 x 160 x 225
6	6	10	10	10
6	6	10	10	10
screw / 27-40 lb in	screw / 36-53 lb in	screw / 90-110 lb in	screw / 180-195 lb in	screw / 180-195 lb in
screw / 7-10 lb in	screw / 7-10 lb in	screw / 7-10 lb in	screw / 7-10 lb in	screw / 7-10 lb in
2x(18-3), 1x(18-2)	2x(10-1/0), 1x(10-2/0)	2x(6-3/0)	2x(2/0-500MCM)	2x(2/0-500MCM)
2x(18-14)	2x(18-14)	2x(18-14)	2x(18-14)	2x(18-14)
75°C CU	75°C CU	75°C CU	75°C CU	75°C CU
Short circuit current rating of main circuit:				
5kA @ 600V	10kA @ 600V	10kA @ 600V	18kA @ 600V	18kA @ 600V
100 / 80	200 / 125	400 / 250	600 / 400	800 / 500
cULus	**cULus**	**cULus**	**cULus**	**cULus**

Electrically Held Lighting Contactors, Class LE

Selection

Ordering Information

- Replace *** with a number from the coil table.
- Field Modification Kits see page 9/104.
- Factory Modifications see page 9/119.
- Dimensions see page 9/170.
- Wiring Diagram see page 9/188.
- Replacement Parts see page 9/134.

Coil Table

VAC 60Hz	***
24	024
120	120
208	208
240	240
277	277
347①	347
480	480
600	600

Replace the (***) with a number from the coil table.

Combination Contactor

Disconnect Type	Max. Amp Rating	Number of NO Poles	Disc. Amp Rating	Disc Amp/ Fuse Clip Rating	Circuit Breaker Rating	Enclosure Type 1	3/3R/12, 4②	4/4X 304 S.S.
						Catalog Number		
Non-Fusible	20	3	30A	—	—	**LEDB1B003***B**	**LEDB2B003***B**	**LEDB4B003***B**
	30	3	30A	—	—	**LEDB1C003***B**	**LEDB2C003***B**	**LEDB4C003***B**
	60	3	60A	—	—	**LEDD1D003***B**	**LEDD2D003***B**	**LEDD4D003***B**
	100	3	100A	—	—	**LEDF1E003***B**	**LEDF2E003***B**	**LEDF4E003***B**
	200	3	200A	—	—	**LEDH1F003***A**	**LEDH2F003***A**	**LEDH4F003***A**
	300	3	400A	—	—	**LEDK1G003***A**	**LEDK2G003***A**	**LEDK4G003***A**
Fusible	20	3	—	30A/250V	—	**LEFA1B003***B**	**LEFA2B003***B**	**LEFA4B003***B**
		3	—	30A/600V	—	**LEFB1B003***B**	**LEFB2B003***B**	**LEFB4B003***B**
	30	3	—	30A/250V	—	**LEFA1C003***B**	**LEFA2C003***B**	**LEFA4C003***B**
		3	—	30A/600V	—	**LEFB1C003***B**	**LEFB2C003***B**	**LEFB4C003***B**
	60	3	—	60A/250V	—	**LEFC1D003***B**	**LEFC2D003***B**	**LEFC4D003***B**
		3	—	60A/600V	—	**LEFD1D003***B**	**LEFD2D003***B**	**LEFD4D003***B**
	100	3	—	100A/250V	—	**LEFE1E003***B**	**LEFE2E003***B**	**LEFE4E003***B**
		3	—	100A/600V	—	**LEFF1E003***B**	**LEFF2E003***B**	**LEFF4E003***B**
	200	3	—	200A/250V	—	**LEFG1F003***A**	**LEFG2F003***A**	**LEFG4F003***A**
		3	—	200A/600V	—	**LEFH1F003***A**	**LEFH2F003***A**	**LEFH4F003***A**
	300	3	—	400A/250V	—	**LEFJ1G003***A**	**LEFJ2G003***A**	**LEFJ4G003***A**
		3	—	400A/600V	—	**LEFK1G003***A**	**LEFK2G003***A**	**LEFK4G003***A**
Circuit Breaker	20	3	—	—	20A	**LEBT1B003***B**	**LEBT2B003***B**	**LEBT4B003***B**
	30	3	—	—	30A	**LEBV1C003***B**	**LEBV2C003***B**	**LEBV4C003***B**
	60	3	—	—	60A	**LEBY1D003***B**	**LEBY2D003***B**	**LEBY4D003***B**
	100	3	—	—	100A	**LEBZ1E003***B**	**LEBZ2E003***B**	**LEBZ4E003***B**

① Not available on 200 - 400A contactors.
② Type 4 painted enclosure through 100 Amp only.

Electrically Held Lighting Contactors, Class LC

Features

Class LC lighting contactors deliver unprecedented versatility in application, simplicity in configuration and performance in operation. Ingenious design, rugged construction and a host of truly useful features make them uniquely appealing to all those who use them.

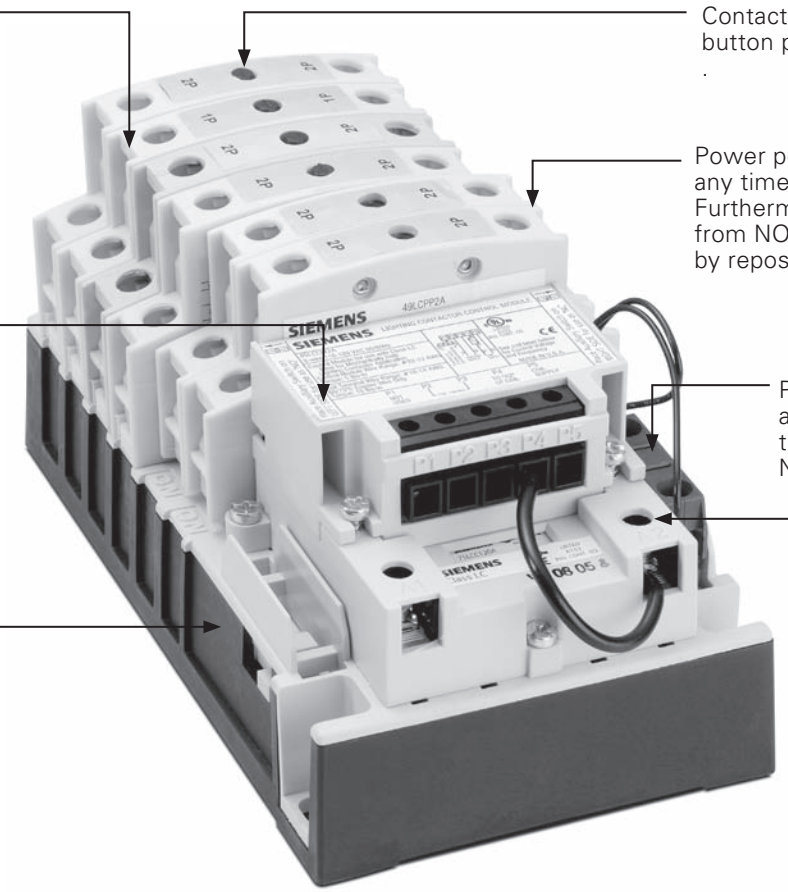

- Used in all applications where either electrically or mechanically held contactors are specifically suited and also ideal for maximum flexibility and future expansion
- Rated for tungsten lighting (incandescent filament), ballast lighting (fluorescent, HID, metal halide, mercury vapor, quartz halogen and sodium-lamp), resistive and general use loads
- Contacts are rated up to 30 amps at 600 volts
- Up to 12 poles (maximum of 8 normally closed)
- Wide range of coil voltages from 24 to 600 VAC 50/60Hz
- Can be ordered as either electrically or mechanically held and can also be converted from electrically to mechanically held in the field with a simple conversion kit
- Modular design enables you to stock the building block components to assemble all configurations of both the electrically and mechanically held contactors thus dramatically reducing inventory
- Full line of enclosures including NEMA 1, 3/3R, 4, 4/4X stainless steel and 12
- Full line of factory and field modifications

Electrically Held Lighting Contactors, Class LC

Features

Catalog Numbering System

LC	E0		C				A

Controller Type
E0 = Electrically Held
(Convertible to MH)

Enclosure Type
0 = Open
1 = NEMA 1
2 = NEMA 12/3R
4 = NEMA 4/4X Stainless Steel

Contactor Rating (Amp)
C = 30

N.C. Poles
0 = None
1 = One
2 = Two
3 = Three
4 = Four
5 = Five
6 = Six
7 = Seven
8 = Eight

N.O. Poles
00 = None
01 = One
02 = Two
03 = Three
04 = Four
05 = Five
06 = Six
07 = Seven
08 = Eight
09 = Nine
10 = Ten
11 = Eleven
12 = Twelve

Coil Voltage
024 = 24V 60Hz / 20V 50Hz
120 = 115-120V 60Hz / 110V 50Hz
208 = 200-208V 60Hz
240 = 230-240V 60Hz / 220V 50Hz
277 = 277V 60Hz / 240V 50Hz
347 = 347V 60Hz
480 = 460-480V 60Hz / 440V 50Hz
600 = 575-600V 60Hz / 550V 50Hz

Electrically Held Lighting Contactors, Class LC

Selection

Ordering Information

- To order standard electrically held contactor, simply select catalog number from tables below.
- To order mechanically held contactor, select catalog number from tables below and specify conversion module from factory modification section from page 9/122.
- To convert standard electrically held contactor to mechanically held in the field, select catalog number from tables below and select conversion module kit from field modification section on page 9/106.
- Replace *** with a number from the coil table.
- Field Modification Kits see page 9/104.
- Factory Modifications see page 9/119.
- Dimensions see page 9/148 open, page 9/170 enclosed.
- Wiring Diagrams see page 9/188.
- Replacement Parts see page 9/134.

Coil Table

VAC 60Hz	***
24	024
120	120
208	208
240	240
277	277
347	347
480	480
600	600

Replace the (***) with a number from the coil table.

Non-Combination Contactor (30 Amp max.)

No. of Poles		Enclosure Type			
		Open	1	3/3R/12	4/4X 304 S.S.
N.C.	N.O.	Catalog Number			
2	0	LCE00C200***A	LCE01C200***A	LCE02C200***A	LCE04C200***A
3		LCE00C300***A	LCE01C300***A	LCE02C300***A	LCE04C300***A
4		LCE00C400***A	LCE01C400***A	LCE02C400***A	LCE04C400***A
5		LCE00C500***A	LCE01C500***A	LCE02C500***A	LCE04C500***A
6		LCE00C600***A	LCE01C600***A	LCE02C600***A	LCE04C600***A
7		LCE00C700***A	LCE01C700***A	LCE02C700***A	LCE04C700***A
8		LCE00C800***A	LCE01C800***A	LCE02C800***A	LCE04C800***A
1	1	LCE00C101***A	LCE01C101***A	LCE02C101***A	LCE04C101***A
2		LCE00C201***A	LCE01C201***A	LCE02C201***A	LCE04C201***A
3		LCE00C301***A	LCE01C301***A	LCE02C301***A	LCE04C301***A
4		LCE00C401***A	LCE01C401***A	LCE02C401***A	LCE04C401***A
5		LCE00C501***A	LCE01C501***A	LCE02C501***A	LCE04C501***A
6		LCE00C601***A	LCE01C601***A	LCE02C601***A	LCE04C601***A
7		LCE00C701***A	LCE01C701***A	LCE02C701***A	LCE04C701***A
8		LCE00C801***A	LCE01C801***A	LCE02C801***A	LCE04C801***A
0	2	LCE00C002***A	LCE01C002***A	LCE02C002***A	LCE04C002***A
1		LCE00C102***A	LCE01C102***A	LCE02C102***A	LCE04C102***A
2		LCE00C202***A	LCE01C202***A	LCE02C202***A	LCE04C202***A
3		LCE00C302***A	LCE01C302***A	LCE02C302***A	LCE04C302***A
4		LCE00C402***A	LCE01C402***A	LCE02C402***A	LCE04C402***A
5		LCE00C502***A	LCE01C502***A	LCE02C502***A	LCE04C502***A
6		LCE00C602***A	LCE01C602***A	LCE02C602***A	LCE04C602***A
7		LCE00C702***A	LCE01C702***A	LCE02C702***A	LCE04C702***A
8		LCE00C802***A	LCE01C802***A	LCE02C802***A	LCE04C802***A
0	3	LCE00C003***A	LCE01C003***A	LCE02C003***A	LCE04C003***A
1		LCE00C103***A	LCE01C103***A	LCE02C103***A	LCE04C103***A
2		LCE00C203***A	LCE01C203***A	LCE02C203***A	LCE04C203***A
3		LCE00C303***A	LCE01C303***A	LCE02C303***A	LCE04C303***A
4		LCE00C403***A	LCE01C403***A	LCE02C403***A	LCE04C403***A
5		LCE00C503***A	LCE01C503***A	LCE02C503***A	LCE04C503***A
6		LCE00C603***A	LCE01C603***A	LCE02C603***A	LCE04C603***A
7		LCE00C703***A	LCE01C703***A	LCE02C703***A	LCE04C703***A
8		LCE00C803***A	LCE01C803***A	LCE02C803***A	LCE04C803***A

Electrically Held Lighting Contactors, Class LC

Selection

Non-Combination Contactor (30 Amp max.)

No. of Poles		Enclosure Type			
		Open	1	3/3R/12	4/4X 304 S.S.
N.C.	N.O.	Catalog Number			
0	4	LCE00C004***A	LCE01C004***A	LCE02C004***A	LCE04C004***A
1		LCE00C104***A	LCE01C104***A	LCE02C104***A	LCE04C104***A
2		LCE00C204***A	LCE01C204***A	LCE02C204***A	LCE04C204***A
3		LCE00C304***A	LCE01C304***A	LCE02C304***A	LCE04C304***A
4		LCE00C404***A	LCE01C404***A	LCE02C404***A	LCE04C404***A
5		LCE00C504***A	LCE01C504***A	LCE02C504***A	LCE04C504***A
6		LCE00C604***A	LCE01C604***A	LCE02C604***A	LCE04C604***A
7		LCE00C704***A	LCE01C704***A	LCE02C704***A	LCE04C704***A
8		LCE00C804***A	LCE01C804***A	LCE02C804***A	LCE04C804***A
0	5	LCE00C005***A	LCE01C005***A	LCE02C005***A	LCE04C005***A
1		LCE00C105***A	LCE01C105***A	LCE02C105***A	LCE04C105***A
2		LCE00C205***A	LCE01C205***A	LCE02C205***A	LCE04C205***A
3		LCE00C305***A	LCE01C305***A	LCE02C305***A	LCE04C305***A
4		LCE00C405***A	LCE01C405***A	LCE02C405***A	LCE04C405***A
5		LCE00C505***A	LCE01C505***A	LCE02C505***A	LCE04C505***A
6		LCE00C605***A	LCE01C605***A	LCE02C605***A	LCE04C605***A
0	6	LCE00C006***A	LCE01C006***A	LCE02C006***A	LCE04C006***A
1		LCE00C106***A	LCE01C106***A	LCE02C106***A	LCE04C106***A
2		LCE00C206***A	LCE01C206***A	LCE02C206***A	LCE04C206***A
3		LCE00C306***A	LCE01C306***A	LCE02C306***A	LCE04C306***A
4		LCE00C406***A	LCE01C406***A	LCE02C406***A	LCE04C406***A
5		LCE00C506***A	LCE01C506***A	LCE02C506***A	LCE04C506***A
6		LCE00C606***A	LCE01C606***A	LCE02C606***A	LCE04C606***A
0	7	LCE00C007***A	LCE01C007***A	LCE02C007***A	LCE04C007***A
1		LCE00C107***A	LCE01C107***A	LCE02C107***A	LCE04C107***A
2		LCE00C207***A	LCE01C207***A	LCE02C207***A	LCE04C207***A
3		LCE00C307***A	LCE01C307***A	LCE02C307***A	LCE04C307***A
4		LCE00C407***A	LCE01C407***A	LCE02C407***A	LCE04C407***A
0	8	LCE00C008***A	LCE01C008***A	LCE02C008***A	LCE04C008***A
1		LCE00C108***A	LCE01C108***A	LCE02C108***A	LCE04C108***A
2		LCE00C208***A	LCE01C208***A	LCE02C208***A	LCE04C208***A
3		LCE00C308***A	LCE01C308***A	LCE02C308***A	LCE04C308***A
4		LCE00C408***A	LCE01C408***A	LCE02C408***A	LCE04C408***A
0	9	LCE00C009***A	LCE01C009***A	LCE02C009***A	LCE04C009***A
1		LCE00C109***A	LCE01C109***A	LCE02C109***A	LCE04C109***A
2		LCE00C209***A	LCE01C209***A	LCE02C209***A	LCE04C209***A
0	10	LCE00C010***A	LCE01C010***A	LCE02C010***A	LCE04C010***A
1		LCE00C110***A	LCE01C110***A	LCE02C110***A	LCE04C110***A
2		LCE00C210***A	LCE01C210***A	LCE02C210***A	LCE04C210***A
0	11	LCE00C011***A	LCE01C011***A	LCE02C011***A	LCE04C011***A
0	12	LCE00C012***A	LCE01C012***A	LCE02C012***A	LCE04C012***A

Electrically Held Lighting Contactors, Class LC

Technical

General technical data:	
Finger-safe (main circuit / control circuit)	yes / yes
Degree of pollution	3
Altitude (m)	2,000
Ambient storage temperature (°C)	-30 to 65
Ambient operating temperature (°C)	-25 to 40
Humidity (% non-condensing)	no data
Shock resistance at rectangular impulse (g/ms)	no data
Shock resistance at sine pulse (g/ms)	no data
Rated impulse voltage resistance (kV)	no data
Rated insulation voltage (V)	600
Mechanical operating cycles as operating time:	
of contactor	100,000
of contactor with additional aux contacts	100,000
Main circuit:	
Number of main contacts	2 - 12 (maximum of 8 NC)
Typical power loss per conductor (W)	no data
Off-load operating frequency (cycles per hour)	60 for continued operation
Current ratings:	
Tungsten (poles per phase)	20A @277V 1p 1ph 20A @480V 2p 1ph 20A @480V 3p 3ph
Ballast (poles per phase)	30A @347V 1p 1ph 30A @600V 2p 1ph 30A @600V 3p 3ph
General and resistive (poles per phase)	30A @600V 1p 1ph 30A @600V 2p 1ph 30A @600V 3p 3ph
Coil ratings:	
Nominal voltage	(refer to coil voltage table)
Inrush / sealed power (VA)	248 / 28
Coil voltage tolerance factor	0.85 - 1.1
External/optional auxiliary contact:	
Number of NC / NO auxiliary contacts	2NC / 2NO max
Rating	A600, 24VDC, 24VAC
Installation/mounting/dimensions:	
Mounting orientation	vertical
Type of mounting: screw / DIN rail	yes / no
Height x Width x Depth (mm)	188 x 106 x 98
Minimum clearance to sides (mm)	12.7
Minimum clearance to earthed parts (mm)	12.7
Connection type / torque:	
Main contact terminals	screw / 35 lb in
Coil terminals	screw / 15 lb in
Auxiliary contact terminals	screw / 7-12 lb in
Control module terminals	screw / 5 lb in
Solid and stranded conductors (AWG):	
Main contact terminals	1x(14-8), #8 solid or stranded 2x(14-8), #8 stranded only
Coil terminals	2x(18-14)
Auxiliary contact terminals	2x(22-12)
Control module terminals	1x(22-12)
Conductor type for main / control circuits	75°C CU / 60-75°C CU
Short circuit current rating of main circuit:	
Short circuit current rating	(see SCCR tables)
Certificates:	**cUL**

Coil voltages:
24V 60Hz / 20V 50Hz
115-120V 60Hz / 110V 50Hz
200-208V 60Hz
230-240V 60Hz / 220V 50Hz
277V 60Hz / 240V 50Hz
347V 60Hz
460-480V 60Hz / 440V 50Hz
575-600V 60Hz / 550V 50Hz

Short circuit current ratings with fuses:			
Max. Volt.	**Fuse**	**Max. Device Rating (Amps)**	**SCCR (kA)**
600	RK fuse	60	5

Short circuit current ratings with circuit breakers:			
Max. Volt.	**Siemens Listed Circuit Breaker**	**Max. Device Rating (Amps)**	**SCCR (kA)**
600	NGG3B040L	40	5
480	HEG3B040L	40	5
480	ED63B040L	40	5
480	NGG3B040L	40	5

Conversion module:		
Input Volt. (AC)	**Steady State Current @ Rated Volts (mA)**	**Max. VA**
24	*80*	*5*
115-120	*83*	*12*
200-277	*91*	*30*

Conversion module:	
Min. pulse duration (3-wire module)	250ms
Max. allowable leakage current	1.8 mA
EMI	35 V/m
Surge transient peak	6 kV
Frequency range	40-70 Hz

Mechanically and Magnetically Held Lighting Contactors, Class CLM

Selection

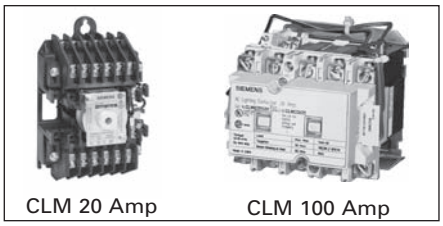
CLM 20 Amp CLM 100 Amp

Mechanically Latched Lighting and Heating Contactor

The CLM Lighting Contactors can be used with metal halide, mercury vapor, quartz halogen, tungsten and fluorescent lighting. They provide reliable and convenient lighting control in numerous applications, such as industrial plants, schools, hospitals, office buildings, shopping centers, airports, stadiums . . . literally everywhere lighting is required.

The CLMs are listed under UL 508 with no derating when used open or enclosed. Combination lighting contactors are listed for UL service entrance.
UL listed File #E60310
CSA Certified File LR 6535

Type CLM 20 Amp Lighting Contactor Solid State Control Modules

The CLM 20 amp lighting contactor is an electromagnetically operated, mechanically latched three wire control contactor. The most commonly used method of control is a three position momentary contact switch with a center-off position. The controlling device must be able to make the coil inrush current but need not break it. The coil current is interrupted by the control contacts within the CLM contactor. Power for the control line may come from a separate source or directly from the line side of the CLM contactor. The CLM contactor can also be controlled by devices such as:

- Break-glass control stations
- Timers having single pole, double throw contacts
- Photo-electric cells①
- Energy management systems①
- Microprocessors①
- Occupancy sensors①

Control modules make it possible to use a controlling device that does not have enough current-carrying capacity to control the CLM contactor directly. Control modules are also used when the control station is to be located at a distance greater than the allowable contactor line run.

Another use for control modules occurs when the controlling device is only available as a single pole single-throw contact necessitating a two wire control line.

Still another application for control modules is when start-stop three wire control is needed.

Control modules also can make it possible to operate the CLM coil from its own incoming line at one voltage while providing the control at a second, perhaps lower voltage.

Two Wire Control Module (Accessory 47)

The advantages of two wire controls are:

1. Control station can have lower ampacity rating.
2. Control station can be located an extended distance from the CLM contactor.
3. Control module can frequently be controlled directly from microprocessor.
4. Control devices can be two wire single pole, single-throw types.
5. Control voltage may be different than the CLM coil circuit and at a lower voltage level.

Note: If the control power to the solid state control module is lost while the module is energized the lighting contactor will open. If the line power to the lighting contactor is lost while the contactor is energized the contactor will not change state with return of line voltage. Power will be restored to the load if the control module is still energized. Control station should be the maintained type.

Three Wire Control Module (Accessory 48)

1. The accessory 48 consists of two relays with contacts appropriately interconnected which provides for an interlocking that prevents both relays from being energized simultaneously.

2. This module has similar characteristics to the two wire module (Accessory 47) except there is no change of switch contact position upon loss of control line power. Control stations should be the momentary type.

Stop-Start Control Module (Accessory 49)

Stop-start three wire maintained control is an arrangement used mostly when controlling motors, but can be used in lighting applications.

Any number of momentary contact control stations consisting of normally open start buttons and normally closed stop buttons can be used. Start buttons are connected in parallel and stop buttons in series.

Operation (Magnetic Latch)

A permanent magnet is built into the contactor structure of the 30A, 60A, 100A, and 200A contactors that will maintain the contactor in its energized state indefinitely without using control power. When energized, a DC current is applied that produces a magnetic field that reinforces the polarity of the permanent magnet, and the contactor pulls in immediately. The current to the coil is disconnected by the coil clearing interlock. In order to drop out the contactor, it is necessary to apply a field through the OFF coil in the reverse direction to the permanent magnet. This momentarily cancels the magnetic attraction and the contactor drops out. Coil and module failures are possible when used with solid state relays and PLC outputs. 24-volt systems are ok to use, but 120 volts and above should be discouraged. If higher values cannot be avoided, an interposing relay should be used.

(Mechanically Latched)

The 300 & 400A lighting and heating contactors operate using a latching mechanism.

Closing – When the "close" pushbutton is operated, the closing coil is energized, closing the contactor. As the contactor closes, the latch lever hooks over the latch pin to mechanically latch the contactor closed. The coil-clearing auxiliary contact de-energizes the closing coil.

Opening – When the "Trip" pushbutton is operated, the trip solenoid coil is energized, unhooking the latch lever from the latch pin, which allows the contactor to open. As the contactor opens, the coil-clearing auxiliary contact de-energizes the trip solenoid coil.

① Operation through control modules.

Mechanically and Magnetically Held Lighting Contactors, Class CLM

Selection

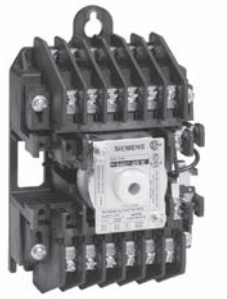

Ordering Information

- Replace *** with a number from the coil table.
- Field modification kits see page 9/104.
- Factory modifications see page 9/119.
- Dimensions see page 9/153 open page 9/170 enclosed.
- Wiring Diagrams see page 9/191.
- Replacement parts see page 9/134.

Coil Table

60Hz Voltage	Number
24②	024
120	120
208	208
240	240
277	277
480	480
600④	600

Open and Non-combination Enclosed Contactors

Max Amp Rating	Number of Poles	Open Type③		Enclosure					
				NEMA 1 General Purpose		NEMA 12 NEMA 3/3R Industrial Use Weatherproof		NEMA 4/4X Stainless Steel Watertight, Dust-tight, Corrosion Resistant, 304 Stainless Steel	
		Catalog Number	List Price $	Catalog Number	List Price $	Catalog Number	List Price $	Catalog Number	List Price $
20	2	see table below		CLM1B02***		CLM2B02***		CLMSB02***	
	3			CLM1B03***		CLM2B03***		CLMSB03***	
	4			CLM1B04***		CLM2B04***		CLMSB04***	
	6			CLM1B06***		CLM2B06***		CLMSB06***	
	8			CLM1B08***		CLM2B08***		CLMSB08***	
	10			CLM1B10***		CLM2B10***		CLMSB10***	
	12			CLM1B12***		CLM2B12***		CLMSB12***	
30	2	CLM0C02***		CLM1C02***		CLM2C02***		CLMSC02***	
	3	CLM0C03***		CLM1C03***		CLM2C03***		CLMSC03***	
	4	CLM0C04***		CLM1C04***		CLM2C04***		CLMSC04***	
	5	CLM0C05***		CLM1C05***		CLM2C05***		CLMSC05***	
	6	CLM0C06***		CLM1C06***		CLM2C06***		—	—
	8	CLM0C08***		CLM1C08***		CLM2C08***		—	—
	9	CLM0C09***		CLM1C09***		CLM2C09***		—	—
	10	CLM0C10***		CLM1C10***		CLM2C10***		—	—
	12	CLM0C12***		CLM1C12***		CLM2C12***		—	—
60	2	CLM0D02***		CLM1D02***		CLM2D02***		CLMSD02***	
	3	CLM0D03***		CLM1D03***		CLM2D03***		CLMSD03***	
	4	CLM0D04***		CLM1D04***		CLM2D04***		CLMSD04***	
	5	CLM0D05***		CLM1D05***		CLM2D05***		CLMSD05***	
	6	CLM0D06***		CLM1D06***		CLM2D06***		—	—
	8	CLM0D08***		CLM1D08***		CLM2D08***		—	—
	9	CLM0D09***		CLM1D09***		CLM2D09***		—	—
	10	CLM0D10***		CLM1D10***		CLM2D10***		—	—
	12	CLM0D12***		CLM1D12***		CLM2D12***		—	—
100	2	CLM0E02***		CLM1E02***		CLM2E02***		CLMSE02***	
	3	CLM0E03***		CLM1E03***		CLM2E03***		CLMSE03***	
	4	CLM0E04***		CLM1E04***		CLM2E04***		CLMSE04***	
	5	CLM0E05***		CLM1E05***		CLM2E05***		CLMSE05***	
200	2	CLM0F02***		CLM1F02***		CLM2F02***		CLMSF02***	
	3	CLM0F03***		CLM1F03***		CLM2F03***		CLMSF03***	
	4	CLM0F04***		CLM1F04***		CLM2F04***		CLMSF04***	
	5	CLM0F05***		CLM1F05***		CLM2F05***		CLMSF05***	
300	2	CLM0G02***		CLM1G02***		CLM2G02***		—	—
	3	CLM0G03***		CLM1G03***		CLM2G03***		—	—
400	2	CLM0H02***		CLM1H02***		CLM2H02***		—	—
	3	CLM0H03***		CLM1H03***		CLM2H03***		—	—

Open 20 Amp Contactors

Max Amp Rating	Number of Poles①	110–120V Coil 50/60Hz		208–240V Coil 50/60Hz		265–277V Coil 50/60Hz	
		Catalog Number	List Price $	Catalog Number	List Price $	Catalog Number	List Price $
20	2	CLM22031		CLM22061		CLM22071	
	3	CLM32031		CLM32061		CLM32071	
	4	CLM42031		CLM42061		CLM42071	
	6	CLM62031		CLM62061		CLM62071	
	8	CLM82031		CLM82061		CLM82071	
	10	CLM102031		CLM102061		CLM102071	
	12	CLM122031		CLM122061		CLM122071	

① Contactors with 2–6-poles will be assembled with all poles located in the top portion of the contactor. Contactors with 8–12-poles will be assembled with 6-poles in the top portion and the remaining poles in the bottom portion of the contactor.

② 24 volt coils are not available on 20, 300 and 400 amp contactor sizes. For 24 volt control of 20 amp contactor select solid state control module.

③ CLM 30 & 60A 6-12-pole can be field assembled. Order mounting kit **49MCMPMA** and the appropriate number of 2-5 pole contactors.

④ 24, 480 or 600 volt coils are not available on 20 amp contactors.

Combination Mechanically and Magnetically Held Lighting Contactors, Class CM

Selection

Ordering Information

- Replace *** with a number from the coil table.
- Field modification kits see page 9/104.
- Factory modifications see page 9/119.
- Dimensions see page 9/170.
- Wiring Diagrams see page 9/191.
- Replacement parts see page 9/134.

Coil Table

60Hz Voltage	Number
24①	024
120	120
208	208
240	240
277	277
480	480
600②	600

Combination Lighting Contactors

Disconnect Type	Contactor Amp Rating	Number of NO Poles	Disc Amp Rating	Disc Amp/ Fuse Clip Rating	Circuit Breaker Rating	Enclosure: NEMA 1 General Purpose		NEMA 12, NEMA 3/3R NEMA 4 Painted (thru 100 amps) Industrial Use Weatherproof, Watertight, Dust-tight		NEMA 4/4X Stainless Steel Watertight, Dust-tight, Corrosion Resistant, 304 Stainless Steel	
						Catalog Number	List Price $	Catalog Number	List Price $	Catalog Number	List Price $
Non-Fusible	20	3	30A	—	—	CMNB14***		CMNB24***		CMNBS4***	
	30	3	30A	—	—	CMNC14***		CMNC24***		CMNCS4***	
	60	3	60A	—	—	CMND15***		CMND25***		CMNDS5***	
	100	3	100A	—	—	CMNE16***		CMNE26***		CMNES6***	
	200	3	200A	—	—	CMNF17***		CMNF27***		CMNFS7***	
	300	3	400A	—	—	CMNG18***		CMNG28***		CMNGS8***	
Fusible	20	3	—	30A/250V	—	CMFB10***		CMFB20***		CMFBS0***	
		3	—	30A/600V	—	CMFB11***		CMFB21***		CMFBS1***	
	30	3	—	30A/250V	—	CMFC10***		CMFC20***		CMFCS0***	
		3	—	30A/600V	—	CMFC11***		CMFC21***		CMFCS1***	
	60	3	—	60A/250V	—	CMFD12***		CMFD22***		CMFDS2***	
		3	—	60A/600V	—	CMFD13***		CMFD23***		CMFDS3***	
	100	3	—	100A/250V	—	CMFE14***		CMFE24***		CMFES4***	
		3	—	100A/600V	—	CMFE15***		CMFE25***		CMFES5***	
	200	3	—	200A/250V	—	CMFF16***		CMFF26***		CMFFS6***	
		3	—	200A/600V	—	CMFF17***		CMFF27***		CMFFS7***	
	300	3	—	400A/250V	—	CMFG18***		CMFG28***		CMFGS8***	
		3	—	400A/600V	—	CMFG19***		CMFG29***		CMFGS9***	
Circuit Breaker	20	3	—	—	20A	CMBB14***		CMBB24***		CMBBS4***	
	30	3	—	—	30A	CMBC15***		CMBC25***		CMBCS5***	
	60	3	—	—	60A	CMBD18***		CMBD28***		CMBDS8***	
	100	3	—	—	100A	CMBE18***		CMBE28***		CMBES8***	
	200	3	—	—	200A	CMBF10***		CMBF20***		CMBFS0***	
	300	3	—	—	300A	CMBG11***		CMBG21***		CMBGS1***	

Lighting & Heating Contactor Ratings CLM

Maximum AC/DC Voltage and Amp Ratings

Load Type	Amperes Continuous	Poles to Load: 1 for 1-Phase	2 for 1-Phase 3 for 3-Phase
Tungsten	20	250V AC	250V AC
Ballast	20	347V AC	600V AC
General	30	347V AC	600V AC
General	20	125V DC	250V DC

Inrush Current Over Fuse Size (amps RMS) at AC Control Voltage 20A CLM					
Amps	120V	240V	277V	347V	480V
Inrush	5.0	2.5	2.2	1.8	1.3
Fuse	2.0	1.0	1.0	0.75	0.5

Contactor Ratings			
Load Type	Amperes Continuous	Max Volts Line to Line	Max Volts Line to Neutral
Tungsten	30-400	480	277
Ballast	30-400	600	346
Heating	30-400	600	346

AC Coil Data			
Contactor Amperes	No. Poles	Inrush VA	Dropout VA
20	2-12	625	6
30	2-5	410	40
60	2-3	410	40
60	4-5	600	40
100/200	2-3	900	200
100/200	4-5	1300	130
300/400	2-3	1600	550

① 24 volt coils are not available on 20 and 300 amp contactors. Use solid state control module on 20 amp size.

② 600 volt coils are not available on 20 amp contactors.

Features

- Enclosed coils (50-5000VA); Completely encloses the transformer coils against moisture, dust, dirt and industrial contaminants for maximum protection in hostile and industrial environments.
- Fuse clips (most models). Factory mounted for integral fusing on the secondary side to save panel space, save wiring time and save the cost of buying an add-on fuse block or kit
- Integrally finger safe terminals. Between terminals and transformer, protect against electrical creepage. Up to 30% greater terminal contact area permits low-loss connections. Extra-deep barriers reduce the chance of shorts from frayed leads or careless wiring
- Terminals. Molded into the transformer, are difficult to break during wiring. A full quarter-inch of thread on the 8-32 terminal screws prevents stripping and pullout
- Jumpers supplied. Two jumper links are standard with all transformers which can be wired for dual primary voltages

Operation

Industrial control circuits and motor control loads typically require more current when they are initially energized than under normal operating conditions. This period of high current demand, referred to as inrush, may be as great as ten times the current required under steady state (normal) operating conditions, and can last up to 40 milliseconds. A transformer in a circuit subject to inrush will typically attempt to provide the load with the required current during the inrush period. However, it will be at the expense of the secondary voltage stability by allowing the voltage to the load to decrease as the current increases. This period of secondary voltage instability, resulting from increased current, can be of such magnitude that the transformer is unable to supply sufficient voltage to energize the load. The transformer must therefore be designed and constructed to accommodate the high inrush current, while maintaining secondary voltage stability. According to NEMA standards, the secondary voltage would typically be at 85% of the rated voltage.

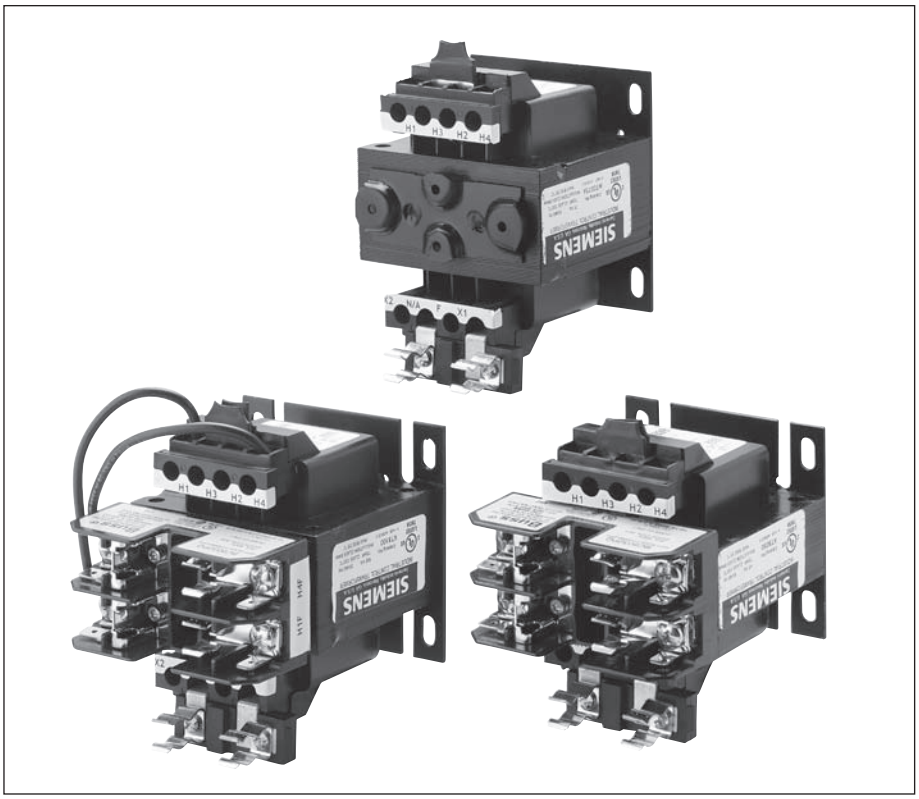

Industrial Control Power Transformers are specifically designed and built to provide adequate voltage to the load while accommodating the high current levels present at inrush. These transformers deliver excellent secondary voltage regulation and meet or exceed the standards established by NEMA, ANSI, UL and cUL. Their rugged construction and excellent electrical characteristics ensure reliable operation of electromagnetic devices and trouble-free performance.

Specifications

- Laminations are built with silicon steel to minimize core losses and to increase optimum performance and efficiency
- Copper magnet wire of the highest quality assures efficient operation
- Factory mounted type "K" fuse clips are standard on all secondary transformers where possible
- Two jumper links are standard with all transformers which can be wired for dual primary voltages
- cUL Listed and CSA certified
- 50/60 Hz rated
- Insulation materials are of the highest rating available for the temperature class
- Mounting plate is heavy gauge steel to add strength to core construction and provide stable mounting. Slotted mounting feet permit easy installation
- Attractive black finish; easy-to-read nameplate with complete rating data and wiring diagram
- Class 130°C (226°F) insulation system. 80°C (176°F) temperature rise. (50-750VA typical)
- Class 180°C (356°F) insulation system. 120°C (248°F) temperature rise. (1000–5000VA typical)
- Optional field mounted 2-pole primary Class CC fuse block is available

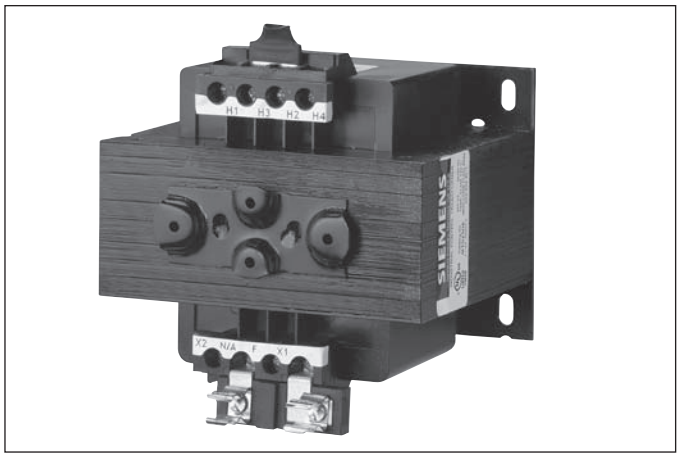

Features

- Class MTG Industrial Control Transformers are 100% certified for all domestic and International Applications
- The MTG line has full compliance with IEC Safety standards EN 61 558
- CE Mark in accordance with requirements for EN 61 558
- Meets IP-20 specifications per IEC 529 for finger-safe protection when used with Siemens Touch Safe snap on terminal cover kits. Meets IP-00 specifications when covers are not used.
- UL Listed
- Exceeds applicable requirements for control transformers as determined by NEMA and ANSI
- Insulation requirements is twice that of UL5085
- Available in 50 to 750 VA sizes, in all standard voltage combinations
- Class 130°C (226°F) insulation system. 80°C (176°F) temperature rise. (50-750VA typical)
- Class 180°C (356°F) insulation system. 120°C (248°F) temperature rise. (1000–5000VA typical)
- Primary and secondary fusing capability available as field installed kits for domestic or international fusing
- Integrally-molded terminals and barriers between terminals make breakage virtually impossible during wiring. The MTG transformer construction is the same as our high quality Class MT transformers

Optional Field Installed Fuse Clip Kits For Panel Mounting

- 2-Pole primary Class CC fuse block
- 1-Pole secondary midget fuse block for 13⁄32 × 1½ fuses
- 2-Pole primary international type fuse blocks
- 1-Pole secondary international type fuse blocks

Optional Touch-Safe Snap-On Terminal Cover Kits

The Touch-Safe terminal covers are designed to comply with IEC 742 and IP 20 requirements. When installed, the covers prevent contact with current carrying parts on the transformer and are available for 4 terminal configurations.

The international fuse block kits have inherent touch safe terminals and fuse clips.

Siemens Meets International Standards

CSA (Canadian Standards Association) was utilized as a Competent Body in reviewing, interpreting and properly complying with the requirements of IEC-742 to place a CE mark on its MTG Series product. As a National Certification Body, CSA also has the proper documentation and reports on file for MTG Series to utilize the CB Scheme ensuring acceptance throughout the world.

The standard Siemens MTG product is available with terminal covers which meets the requirements of IEC-529, IP20 degree of protection and meets the applicable requirements for covers per IEC-742.

IEC-742

The requirements for industrial control circuit transformers to be used in the European Common Market are identified by the International Electrotechnical Commission (IEC) and specified under IEC-742, Non-Short Circuit Proof Isolating Transformers, under the Low Voltage Directive 73/23/EEC. Manufacturers of control transformers indicate compliance with these requirements by placing a CE mark on the product.

- Winding to winding insulation requirements may be twice that for IEC-742 compared to UL506
- The electrical clearances between current carrying parts are one-third greater to comply with IEC-742 requirements for units up to 250VA with voltages up to 440 volts ac
- Transformers manufactured to IEC-742 requirements will have a minimum of 10% higher overload capacity than those manufactured only to UL506 requirements

While no requirement exists in IEC-742 for the electrical connections to be either finger safe or touch proof, the specification does state that IF a transformer is supplied with a cover to prevent incidental contact with current carrying parts, that cover must utilize two separate methods or places of securing it to the component, with neither being dependent upon the other. Additionally, one of these methods MUST require a tool to remove it.

IEC-529

The requirements for finger-safe or touch-proof electrical connections are identified by the International Electrotechnical Commission (IEC) under specification 529, Classification of Degrees of Protection Provided by Enclosures. These various degrees of protection are identified and differentiated by IP ratings.

The IP specification which most closely approximates protection to a human finger is IP20. This IP rating would be the most common degree of touch-proof connection for electrical components such as transformers.

EN 61 558

The requirements for industrial control transformers to be used in the European Common Market are identified by the IEC and specified in EN 61 558, Safety of Power Control Transformers, under Low Voltage Directive 73/23/EEC. CE mark on the product indicates compliance.

Transformer Selection Process

Selecting a transformer for industrial control circuit applications requires knowledge of the following terms:

Inrush VA is the product of load voltage (V) multiplied by the current (A) that is required during circuit start-up. It is calculated by adding the inrush VA requirements of all devices (contactors, timers, relays, pilot lights, solenoids, etc.), which will be energized together. Inrush VA requirements are best obtained from the component manufacturer.

Sealed VA is the product of load voltage (V) multiplied by the current (A) that is required to operate the circuit after initial start-up or under normal operating conditions. It is calculated by adding the sealed VA requirements of all electrical components of the circuit that will be energized at any given time. Sealed VA requirements are best obtained from the component manufacturer. Sealed VA is also referred to as steady state VA.

Primary Voltage is the voltage available from the electrical distribution system and its operational frequency, which is connected to the transformer supply voltage terminals.

Secondary Voltage is the voltage required for load operation which is connected to the transformer load voltage terminals.

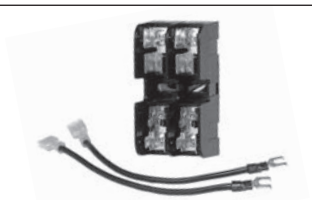

Fuse Clip Kit KCCFPX2R

Primary Fuse Kit

In addition to factory installed secondary fusing, Siemens offers a primary fuse kit for class MT transformers size 50–750 VA for field installation. The primary fuse kit includes a 2-pole Class CC fuse block, instructions and all associated mounting and wiring hardware. Additionally, this fuse kit will fit most competitors' units. To order this kit, use catalog number **KCCFPX2R**. The primary fuse kit, when installed, will add a maximum of 0.69 in. (18 mm) to the transformer "A" dimension and 1.94 in. (49 mm) to the "C" dimension.

Once the circuit variables have been determined, transformer selection is a simple 5-step process as follows:

1. Determine the Application Inrush VA by using the following industry accepted formula:
   Application Inrush VA = $\sqrt{(\text{Inrush VA})^2 + (\text{Sealed VA})^2}$
2. Refer to the Regulation Data Chart. If the primary voltage is basically stable and does not vary by more than 5% from nominal, the 90% secondary voltage column should be used. If the primary voltage varies between 5% and 10% of nominal, the 95% secondary voltage column should be used.
3. After determining the proper secondary voltage column, read down until a value equal to or greater than the Application Inrush VA is found. In no case should a figure less than the Application Inrush VA be used.
4. Read left to the Transformer VA Rating column to determine the proper transformer for this application. As a final check, make sure that the Transformer VA Rating is equal to or greater than the total sealed requirements. If not, select a transformer with a VA rating equal to or greater than the total sealed VA.
5. Refer to the following pages to determine the proper catalog number based on the transformer VA, and primary and secondary voltage requirements.

Regulation Data Chart

Transformer VA Ratings	Inrush VA At 20% Power Factor		
	NEMA/IEC 95% Sec Voltage	NEMA/IEC 90% Sec Voltage	NEMA/IEC 85% Sec Voltage
25	100/——	130/——	150/——
50	170/190	200/220	240/270
75	310/350	410/460	540/600
100	370/410	540/600	730/810
150	780/860	930/1030	1150/1270
200	810/900	1150/1270	1450/1600
250	1400/1540	1900/2090	2300/2530
300	1900/2090	2700/2970	3850/4240
350	3100/3410	3650/4020	4800/5280
500	4000/4400	5300/5830	7000/7700
750	8300/9130	11000/12100	14000/15400
1000①	15000/——	21000/——	27000/——
1000②	9000/——	13000/——	18500/——
1500	10500/——	15000/——	205000/——
2000	17000/——	25500/——	34000/——
3000	24000/——	36000/——	47500/——
5000	55000/——	92500/——	115000/——

To comply with NEMA standards, which require all magnetic devices to operate successfully at 85% of rated voltage, the 90% secondary voltage column is most often used in selecting a transformer.

① For units with Class 105°C insulation systems.
② For units with Class 180°C insulation systems.

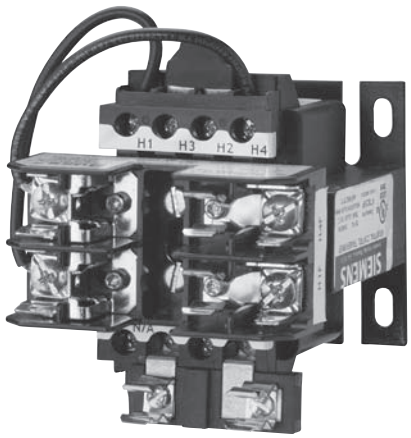

Primary Fuse Kit Installation—Class MT Transformer with Primary Fuse Kit, KCCFPX2R

Domestic, Class MT

Selection

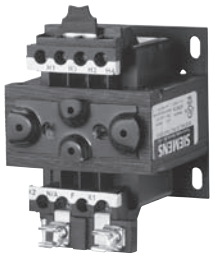

Ordering Information

- Use the Voltage Table to determine the primary and secondary voltage required.
- Field Modifications see page 9/112.
- Dimensions see page 9/155.
- Wiring Diagrams see page 9/193.
- Touchsafe cover chart see page 9/101.

Voltage Table

Primary Volts 50/60 Hz	Secondary Volts	Letter
240 X 480, 230 X 460, 220 X 440	120/115/110	A
240 X 480	24	B
120 X 240	24	C
115 X 230	24	D
550/575/600	110/115/120	E
208/277	120	F
208/230/460	115	G
230/460/575	95/115	H
380/400/415	110 X 220	I
208/230/460, 200/220/440,240/480	24 X 115, 23 X 110, 25 X 120	J
240/416/480/600, 230/400/460/575, 220/380/440/550, 208/500	99/120/130, 95/115/125, 91/110/120, 85/100/110	L
240 X 480	120 X 240	M

VA Rating	Voltage Letter A		Voltage Letter B		Voltage Letter C		Voltage Letter D		Voltage Letter E		Voltage Letter F	
	Catalog No	List Price $	Catalog No	List Price $	Catalog No	List Price $	Catalog No	List Price $	Catalog No	List Price $	Catalog No	List Price $
50	MT0050A		MT0050B		MT0050C		MT0050D		MT0050E		MT0050F	
75	MT0075A		MT0075B		MT0075C		MT0075D		MT0075E		MT0075F	
100	MT0100A		MT0100B		MT0100C		MT0100D		MT0100E		MT0100F	
150	MT0150A		MT0150B		MT0150C		MT0150D		MT0150E		MT0150F	
200	MT0200A		MT0200B		MT0200C		MT0200D		MT0200E		MT0200F	
250	MT0250A		MT0250B		MT0250C		MT0250D		MT0250E		MT0250F	
300	MT0300A		MT0300B		MT0300C		MT0300D		MT0300E		MT0300F	
350	MT0350A		MT0350B		MT0350C		MT0350D		MT0350E		MT0350F	
500	MT0500A		MT0500B		MT0500C		MT0500D		MT0500E		MT0500F	
750	MT0750A		MT0750B		—	—	—	—	MT0750E		MT0750F	
1000	MT1000A		—	—	—	—	—	—	MT1000E		—	—
1500	MT1500A		—	—	—	—	—	—	—	—	—	—
2000	MT2000A		—	—	—	—	—	—	—	—	—	—
3000	MT3000A		—	—	—	—	—	—	—	—	—	—
5000	MT5000A		—	—	—	—	—	—	—	—	—	—

VA Rating	Voltage Letter G		Voltage Letter H		Voltage Letter I		Voltage Letter J		Voltage Letter L		Voltage Letter M	
	Catalog No	List Price $	Catalog No	List Price $	Catalog No	List Price $	Catalog No	List Price $	Catalog No	List Price $	Catalog No	List Price $
50	MT0050G		MT0050H		MT0050I		MT0050J		MT0050L		MT0050M	
75	MT0075G		MT0075H		MT0075I		MT0075J		—	—	MT0075M	
100	MT0100G		MT0100H		MT0100I		MT0100J		MT0100L		MT0100M	
150	MT0150G		MT0150H		MT0150I		MT0150J		MT0150L		MT0150M	
200	MT0200G		MT0200H		MT0200I		MT0200J		—	—	MT0200M	
250	MT0250G		MT0250H		MT0250I		MT0250J		MT0250L		MT0250M	
300	MT0300G		MT0300H		MT0300I		MT0300J		—	—	MT0300M	
350	MT0350G		MT0350H	—	MT0350I		MT0350J		MT0350L		MT0350M	
500	MT0500G		MT0500H		MT0500I		MT0500J		MT0500L		MT0500M	
750	MT0750G		MT0750H		MT0750I		—	—	MT0750L		MT0750M	
1000	MT1000G		MT1000H		MT1000I		—	—	—	—	MT1000M	
1500	MT1500G		MT1500H		MT1500I		—	—	—	—	MT1500M	—
2000	MT2000G		MT2000H		MT2000I		—	—	—	—	MT2000M	—
3000	MT3000G		MT3000H		MT3000I		—	—	—	—	MT3000M	—
5000	MT5000G		MT5000H		—	—	—	—	—	—	MT5000M	—

International, Class MTG

Selection

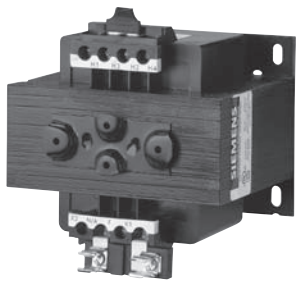

Ordering Information

- Use the Voltage Table to determine the primary and secondary voltage required.
- Field Modifications see page 9/112.
- Dimensions see page 9/155.
- Wiring Diagrams see page 9/193.
- Touchsafe cover chart see below.

Voltage Table

Primary Volts 50/60 Hz	Secondary Volts	Letter
240 X 480, 230 X 460, 220 X 440	120/115/110	A
240 X 480	24	B
120 X 240	24	C
550/575/600	110/115/120	E
380/400/415	110 X 220	I
208/230/460, 200/220/440, 240/480	24 X 115, 23 X 110, 25 X 120	J
380	24	P

VA Rating	Voltage Letter A		Voltage Letter B		Voltage Letter C		Voltage Letter E		Voltage Letter I		Voltage Letter J		Voltage Letter P	
	Catalog No	List Price $	Catalog No	List Price $	Catalog No	List Price $	Catalog No	List Price $	Catalog No	List Price $	Catalog No	List Price $	Catalog No	List Price $
50	**MTG0050A**		**MTG0050B**		**MTG0050C**		**MTG0050E**		**MTG0050I**		**MTG0050J**		**MTG0050P**	
75	**MTG0075A**		**MTG0075B**		**MTG0075C**		**MTG0075E**		**MTG0075I**		**MTG0075J**		**MTG0075P**	
100	**MTG0100A**		**MTG0100B**		**MTG0100C**		**MTG0100E**		**MTG0100I**		**MTG0100J**		**MTG0100P**	
150	**MTG0150A**		**MTG0150B**		**MTG0150C**		**MTG0150E**		**MTG0150I**		**MTG0150J**		**MTG0150P**	
200	**MTG0200A**		**MTG0200B**		**MTG0200C**		**MTG0200E**		**MTG0200I**		**MTG0200J**		**MTG0200P**	
250	**MTG0250A**		**MTG0250B**		**MTG0250C**		**MTG0250E**		**MTG0250I**		**MTG0250J**		**MTG0250P**	
300	**MTG0300A**		**MTG0300B**		**MTG0300C**		**MTG0300E**		**MTG0300I**		**MTG0300J**		**MTG0300P**	
350	**MTG0350A**		**MTG0350B**		**MTG0350C**		**MTG0350E**		**MTG0350I**		**MTG0350J**		**MTG0350P**	
500	**MTG0500A**		**MTG0500B**		**MTG0500C**		**MTG0500E**		**MTG0500I**		**MTG0500J**		**MTG0500P**	
750	**MTG0750A**		**MTG0750B**		**MTG0750C**		**MTG0750E**		**MTG0750I**		**MTG0750J**		**MTG0750P**	
1000	**MTG1000A**		**MTG1000B**		**MTG1000C**	—	—	—	—	—	**MTG1000J**		—	—
1500	**MTG1500A**		—	—	—	—	—	—	—	—	—	—	—	—
2000	**MTG2000A**		—	—	—	—	—	—	—	—	—	—	—	—
3000	**MTG3000A**		—	—	—	—	—	—	—	—	—	—	—	—
5000	**MTG5000A**		—	—	—	—	—	—	—	—	—	—	—	—

Touchsafe Covers For MT style CPT

VA Rating	Voltage Letter	Primary Side Touchsafe?	Secondary Side Touchsafe?	Secondary Side Fuse Clips?
50	A,B,C,D,E,F,G,H,J	Yes	Yes	Yes①
	I,L,M	Yes	Yes	No②
75	A,B,C,D,E,F,G,H,J	Yes	Yes	Yes①
	I,M	Yes	Yes	No②
100	A,B,C,D,E,F,G,H,J	Yes	Yes	Yes①
	I,L,M	Yes	Yes	No②
150	A,B,C,D,E,F,G,H,J	Yes	Yes	Yes①
	I,L,M	Yes	Yes	No②
200	A,B,C,D,E,F,G,H,J	Yes	Yes	Yes①
	I,M	Yes	Yes	No②
250	A,B,C,D,E,F,G,H,J	Yes	Yes	Yes①
	I,L,M	Yes	Yes	No②
300	A,B,C,D,E,F,G,H,J	Yes	Yes	Yes①
	I,M	Yes	Yes	No②
350	A,B,C,D,E,F,G,H,J	Yes	Yes	Yes①
	I,L,M	Yes	Yes	No②
500	A,B,C,D,E,F,G,H,J	Yes	No③	Yes①
	I,L,M	Yes	Yes	No②
750	A,B,C,D,E,F,G,H	Yes	No③	Yes①
	I,L,M	Yes	Yes	No②
1000	A,E,G,H	Yes	No③	Yes①
	I,M	Yes	Yes	No②
1500	A,G,H	Yes	No③	Yes①
	I	Yes	Yes	No②
2000	A,G,H	Yes	No③	Yes①
	I	Yes	Yes	No②
3000	A,G,H,I	Yes	Yes	No②
5000	A,G,H	Yes	Yes	No②

Touchsafe Covers For MTG style CPT

VA Rating	Voltage Letter	Primary Side Touchsafe?	Secondary Side Touchsafe?	Secondary Side Fuse Clips?④
50	A,B,C,E,I,J,P	Yes	Yes	No
75	A,B,C,E,I,J,P	Yes	Yes	No
100	A,B,C,E,I,J,P	Yes	Yes	No
150	A,B,C,E,I,J,P	Yes	Yes	No
200	A,B,C,E,I,J,P	Yes	Yes	No
250	A,B,C,E,I,J,P	Yes	Yes	No
300	A,B,C,E,I,J,P	Yes	Yes	No
350	A,B,C,E,I,J,P	Yes	Yes	No
500	A,B,C,E,I,J,P	Yes	Yes	No
750	A,B,C,E,I,J,P	Yes	Yes	No
1000	A,B,C,J	Yes	Yes	No
1500	A	Yes	Yes	No
2000	A	Yes	Yes	No
3000	A	Yes	Yes	No
5000	A	Yes	Yes	No

① Needs US2:KCCSECFCVR to be Touchsafe

② If secondary fuse holder is required, use KCCF1G panel mount fuse holder

③ Needs US2:KCCSECFCVR2

④ International fusing options, see CPT accessory page

Selection

Accessories—Class SMF

Description	Catalog Number	List Price $
Handle Guard Kit with Padlock Provision	**SMFFL1**	
Emergency Off Actuator	**SMFPB1**	
Additional Key for Key Operated Devices	**SMFFK1**	

Pilot Light Kits—Class MMS, MRS①

Device	Voltage Rating	Red Pilot Light		Green Pilot Light	
		Catalog Number	List Price $	Catalog Number	List Price $
Class SMF	115–277V AC	**SMFPL10**		**SMFPL10G**	

Enclosures—Class SMF

Enclosure Type	For Use With SMF	Catalog Number	List Price $
Standard Size NEMA 1 General Purpose	FO1, FO1P, FO2, FO2P, FO3, FO3P, FO4, FO4P	**SMFFE2**	
Oversized NEMA Type 1 General Purpose	FO1, FO1P, FO2, FO2P, FO3, FO3P, FO4, FO4P	**SMFFE1**	
NEMA 3R, 4, 12 Watertight Dust-tight	FO1, FO1P, FO2, FO2P, FO3, FO3P, FO4, FO4P	**SMF40BC2**	

Nameplates—Class SMF

For Use On	Nameplate Marking	Without Pilot Light		With Pilot Light	
		Catalog Number	List Price $	Catalog Number	List Price $
Standard commercial switch box cover including stainless steel plates	None	**SMFFN2**		—	—
Stainless Steel Plate	None	**SMFFSN3**		**SMFFSN4**	
NEMA 1 surface mounted enclosure or gray flush plate	None	**SMFFN30**		**SMFFN40**	
	High	**SMFFN31**		**SMFFN41**	
	Low	**SMFFN32**		**SMFFN42**	

Accessories—Class MMS, MRS

Description	Catalog Number	List Price $
Handle Guard Kit with Padlock Provision	**SMFFL1**	
Emergency Off Actuator	**SMFPB1**	
Additional Key for Key Operated Devices	**SMFFK1**	

Pilot Light Kits—Class MMS, MRS①

Device	Voltage Rating	Red Pilot Light		Green Pilot Light	
		Catalog Number	List Price $	Catalog Number	List Price $
Class MMS	110–120V AC	**SMFPL11**		**SMFPL11G**	
	208–277V AC	**SMFPL12**		**SMFPL12G**	
	440–600V AC	**SMFPL13**		**SMFPL13G**	

Enclosures—Class MMS

Enclosure Type	For Use With MMS	Catalog Number	List Price $
Standard Size NEMA 1 General Purpose	KO1, KO1P, KO1B, KO2, KO2A, KO2B, KO3, KO3A, KO3B, KO4, KO4A, KO4B	**MMSKE3**	
Oversized NEMA Type 1 General Purpose	KO1, KO2B, KO2C, KO3, KO3A, KO3B, KO4, KO4B, KO4C, KO2	**SMFKE1**	
Jumbo NEMA Type 1 General Purpose	KO1, KO2B, KO2C, KO3, KO3A, KO3B, KO4, KO4B, KO4C, KO2	**SMFKE2**	
NEMA 3R, 4, 12 Watertight Dust-tight	KO1, KO2B, KO2C, KO3, KO3A, KO3B, KO4, KO4B, KO4C	**SMF40BC2**	

Nameplates—Class MMS

For Use On	Nameplate Marking	Without Pilot Light		With Pilot Light	
		Catalog Number	List Price $	Catalog Number	List Price $
Standard commercial switch box cover including stainless steel plates	None	**SMFFN1**		—	—
NEMA 1 surface mounted enclosure or gray flush plate	None	**SMFFN10**		**SMFFN20**	
	High	**SMFFN11**		**SMFFN21**	
	Low	**SMFFN12**		**SMFFN22**	
	Forward	**SMFFN13**		—	—
	Reverse	**SMFFN14**		**SMFFN24**	

Replacement Parts—Class SMF, MMS

Description	Catalog Number	List Price $
Replacement Toggle Kits:Type FW and KW (NEMA 4 Metallic Enclosure)	**SMFHW1**	

① Pilot lights can be field installed on standard NEMA 1 general purpose surface mount enclosures, and NEMA 3R, 4 and 12 enclosures only.
For flush mounting units a complete switch unit with pilot light must be ordered.

Selection

	Description	Type		Catalog Number	List Price $
	Auxiliary Contact Blocks				
3RV2901-1D	**Plug in contact block** 1 block per 3RV mountable at the front	1 SPDT contact, NO/NC 1 NO + 1 NC 1 SPDT contact NO/NC electronic contact④		**3RV2901-1D** **3RV2901-1E** **3RV2901-1G**	
3RV2901-1A	**Side mount auxiliary contact with screw connection** 1 side mount auxiliary contact per 3RV mountable on the left-hand side	1 NO + 1 NC 2 NO 2 NC 2 NO + 2 NC		**3RV2901-1A** **3RV2901-1B** **3RV2901-1C** **3RV2901-1J**	
	Signaling Contact Block				
	Signaling contact 1 signaling contact per 3RV mountable on the left-hand side. Can also be fitted together with side mount auxiliary contact.	1NO + 1NC for any trip + 1NO + 1NC for short circuit trip only.		**3RV2921-1M**	
	Auxiliary Releases				
3RV2922-1CP0	**Undervoltage release** 1 undervoltage release per 3RV mountable on the right-hand side. Cannot be fitted together with shunt trip.	AC 50Hz — 230V 415V	AC 60Hz 120V 208V 240V 480V	**3RV2902-1AF0** **3RV2902-1AM1** **3RV2902-1AP0** **3RV2902-1AV1**	
	Undervoltage release with early make contacts (2NO) 1 undervoltage release per 3RV mountable at the right-hand side. Cannot be fitted together with shunt trip.	AC 50Hz 230V 415V	AC 60Hz 240V 480V	**3RV2922-1CP0** **3RV2922-1CV1**	
3RV2902-1DP0	**Shunt trip** 1 shunt trip per 3RV mountable at the right-hand side. Cannot be fitted together with undervoltage release.	AC 50Hz/60Hz① 20–24V 90–110V 200–240V 350–415V	DC② 20–70V 70–190V 190–330V 330–500V	**3RV2902-1DB0** **3RV2902-1DF0** **3RV2902-1DP0** **3RV2902-1DV0**	
	Pilot Lights	AC 50Hz/60Hz			
	For NEMA 1 enclosure only. Kit includes Red, Green, and Amber lenses	24V 120V 240V 480V 600V		**49SBLBJ③** **49SBLBF③** **49SBLBG③** **49SBLBH③** **49SBLBE③**	
	Lug Kit				
3RV2928-1H	Required for Type E Manual Combination Starter	For 3RV with amp range: 0.11-22A up to 480V Max. 0.11-12.5A up to 575V Max		**3RV2928-1H**	
	Mounting				
	Push-in Mounting Hole Kit For screw panel mounting of the 3RV	Four mounting holes required for each 3RV.		**3RV2928-0B**	
	Sealing device				
	Adjustment Dial covers	For sealing the FLA adjustment dial (Kit includes 10 covers)		**3RV2908-0P**	
	Front mount auxiliary cover	For sealing the front mount auxiliary opening. (Kit includes 10 covers)		**3RV2901-0H**	
	Door Operators				
3RV2901-0H	**Thru-the-door operators** Rotary operating mechanism, rated NEMA 12, lockable with up to 3 padlocks in the OFF position. Includes extension shift and connecting element for the 3RV.	With Black Handle	130 mm depth	**3RV2926-0B**	
			330 mm depth with supporting bracket	**3RV2926-0K**	

① 100% on time.
② 5 sec. max. on time.
③ Product Category: PILO.

④ Compatible for use in dusty atmospheres. Contacts rated for 1-300mA @ 3-60V.

Pilot Devices

Selection

Push Buttons and Selector Switches	Class	Enclosure Type	Controller Size or (Lighting Rating)	Type	Catalog Number	List Price $
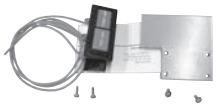 **49SBPB5**	14, 40, LC, LEN, CLM①	Open	00-4	Start, Stop Push Buttons	**49SAPB5**	
				Hand-Off-Auto Selector Switch	**49SASB1**	
				Off-On Selector Switch	**49SASB4**	
		1	00-4 or (20–100A)	Start, Stop Push Buttons	**49SBPB5**	
				Hand-Off-Auto Selector Switch	**49SBSB1**	
				Off-On Selector Switch	**49SBSB4**	
			5-8 or (200–400A)	Start, Stop Push Buttons	**49SAP05**	
				Hand-Off-Auto Selector Switch	**49SAS01**	
				Keyed Hand-Off-Auto (key removable in all positions)	**49SAS09**	
				Off-On Selector Switch	**49SAS04**	
49SBSB1		12, 4/4X	00-8 or (20–400A)	Start, Stop Push Buttons	**49SAP05**	
				Hand-Off-Auto Selector Switch	**49SAS01**	
				Keyed Hand-Off-Auto (key removable in all positions)	**49SAS09**	
				Off-On Selector Switch	**49SAS04**	
	22, 43	Open	00-4	Forward-Off-Reverse Selector Switch	**49SASB2**	
		1	00-4	Forward-Off-Reverse Selector Switch	**49SBSB2**	
			5-8	Forward, Reverse, Stop Push Buttons	**49SAP02**	
				Forward-Off-Reverse Selector Switch	**49SAS02**	
		12, 4/4X	0-8	Forward, Reverse, Stop Push Buttons	**49SAP02**	
				Forward-Off-Reverse Selector Switch	**49SAS02**	
49SAP05	30 (2S1W)	Open	0-4	High-Off-Low Selector Switch	**49SASB3**	
		1	0-1 ¾	High-Off-Low Selector Switch	**49SBSB3**	
			2-4	High, Low, Stop Push Buttons	**49SAP03**	
				High-Off-Low Selector Switch	**49SAS03**	
		12, 4/4X	0-4	High, Low, Stop Push Buttons	**49SAP03**	
				High-Off-Low Selector Switch	**49SAS03**	
	30 (2S2W)	Open	0-4	High-Off-Low Selector Switch	**49SASB3**	
		1	0-4	High-Off-Low Selector Switch	**49SBSB3**	
		12, 4/4X	0-4	High, Low, Stop Push Buttons	**49SAP03**	
				High-Off-Low Selector Switch	**49SAS03**	
49SAS01	17, 18, 36, 37, 83, 84, LED,LEF, LEB, CMN①, CMF①, CMB①	1, 12, 4/4X	0-8 (20-400A)	Start, Stop Push Buttons	**49SAP05**	
				Hand-Off-Auto Selector Switch	**49SAS01**	
				Keyed Hand-Off-Auto (key removable in all positions)	**49SAS09**	
				Off-On Selector Switch	**49SAS04**	
	25, 26	1, 12, 4/4X	0-8	Forward, Reverse, Stop Push Buttons	**49SAP02**	
				Forward-Off-Reverse Selector Switch	**49SAS02**	
	32	1, 12, 4/4X	0-4	High, Low, Stop Push Buttons	**49SAP03**	
				High-Off-Low Selector Switch	**49SAS03**	

① To be used for replacement of switch only. Does not include relay or extra contact block on 30-400A CLM and CM Lighting Contactors. Class 49SB not available for these devices.

Pilot Lights

Selection

Description	Class	Enclosure Type	Controller Size or (Lighting Rating)	Lens Color(s)	Legend(s)	Voltage	Catalog Number	List Price $
49SBLBF	14, 40, 22②, 43②, 30 (2S2W)③, LC, LEN, CLM	1	00–4 or (20–200A)	Red, Green, Amber	ON, RUN, OFF①, OL TRIPPED⑤, FORWARD, REVERSE, LOW, HIGH	24 Vac	**49SBLBJ**	
						120 Vac	**49SBLBF**	
						208/240/277 Vac	**49SBLBG**	
						480 Vac	**49SBLBH**	
						600 Vac	**49SBLBE**	
		1 12, 4/4X	5–8 or (300–400A) 0–8 or (20–400A)	Red (Transformer Type)	ON	24 Vac (Full Voltage)	**49SPL0BRJ**	
						120 Vac	**49SPL0BRF**	
						240 Vac	**49SPL0BRG**	
						480 Vac	**49SPL0BRH**	
						600 Vac	**49SPL0BRE**	
				Green (Transformer Type)	OFF④	24 Vac (Full Voltage)	**49SPL0AGJ**	
						120 Vac	**49SPL0AGF**	
						240 Vac	**49SPL0AGG**	
						480 Vac	**49SPL0AGH**	
						600 Vac	**49SPL0AGE**	
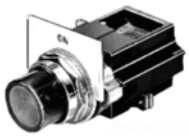 **49SPL0BRF**	30 (2S1W)②	1	0–4	Red, Green, Amber	ON, RUN, OFF①, OL TRIPPED⑤, FORWARD, REVERSE, LOW, HIGH	24 Vac	**49SBLBJ**	
						120 Vac	**49SBLBF**	
						208/240/277 Vac	**49SBLBG**	
						480 Vac	**49SBLBH**	
						600 Vac	**49SBLBE**	
		1	2–4	Red (Transformer Type)	ON	24 Vac (Full Voltage)	**49SPL0BRJ**	
						120 Vac	**49SPL0BRF**	
						240 Vac	**49SPL0BRG**	
						480 Vac	**49SPL0BRH**	
						600 Vac	**49SPL0BRE**	
		12, 4/4X	0–4	Green (Transformer Type)	OFF④	24 Vac (Full Voltage)	**49SPL0AGJ**	
						120 Vac	**49SPL0AGF**	
						240 Vac	**49SPL0AGG**	
						480 Vac	**49SPL0AGH**	
						600 Vac	**49SPL0AGE**	
	17, 18, 25②, 26②, 32②, 36, 37, 81, 83, 84, 87, 88, LC, LED, LEF, LEB, CMN, CMF, CMB	1, 12, 4/4X	0–6 (20–400A)	Red (Transformer Type)	ON	24 Vac (Full Voltage)	**49SPL0BRJ**	
						120 Vac	**49SPL0BRF**	
						240 Vac	**49SPL0BRG**	
						480 Vac	**49SPL0BRH**	
						600 Vac	**49SPL0BRE**	
				Green (Transformer Type)	OFF④	24 Vac (Full Voltage)	**49SPL0AGJ**	
						120 Vac	**49SPL0AGF**	
						240 Vac	**49SPL0AGG**	
						480 Vac	**49SPL0AGH**	
						600 Vac	**49SPL0AGE**	
49SBLBL	Lens Kit ONLY (30 (2S1W)) (14, 40, 22, 43, 30 (2S2W), LC, LEN, CLM)	1	0–1 ¾ 00–4 or (20–200A)	Red, Green, Amber	—	—	**49SBLBL**	
	LED bulb BA9s type Used to replace incan-decsent or LED bulbs⑥	—	—	Red	—	24 V AC/DC	**52AED2**	
				Green			**52AED3**	
				Amber			**52AED4**	
				White			**52AEDB**	
		—	—	Red	—	120 - 600 V AC/DC	**52AEB2**	
				Green			**52AEB3**	
				Amber			**52AEB4**	
				White			**52AEBB**	

① "Off" PL requires: (1) N.C. aux contact, 49AB01 on sizes 00-4.
② Class 22, 25, 26, 30, 32, 43, 83 & 84 requires qty. of (2) pilot light kits. Does not apply to 49SB kits. Select appropriate legend plate as a separate item per type of starter; either "FORWARD" & "REVERSE" or "LOW" & "HIGH".
③ 2S2W is starter size 0–4.
④ Includes NC aux contact for NEMA starter Size 0–4.
⑤ The "OL TRIPPED" pilot light with a bimetal OLR, requires the OLR to have a N.O. contact as well as a N.C. contact.
⑥ LED bulb applies to only 49SP* pilot lights. They do not apply to 49SB* pilot lights.

NEMA, Lighting and Heating Contactors, 20 Amp CLM, CMB, CMF, CMN

Selection

Solid State Control Module Kits For Lighting and Heating Contactors①

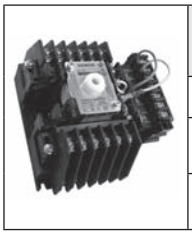

CLM 20 Amp Contactor Kit Description	Accessory	Catalog Number	List Price $	Accessory	Catalog Number	List Price $	Accessory	Catalog Number	List Price $
120V AC, 50/60 Hz	47 (2-Wire Control) (2W)	**CLM4379771**		48 (3-Wire Control) (3W)	**CLM4379781**		49 (Start/Stop Control) (3WS)	**CLM4379791**	
24V AC/DC, 50/60 Hz		**CLM4379772**			**CLM4379782**			**CLM4379792**	
240/277V AC, 50/60 Hz		**CLM4379773**			**CLM4379783**			**CLM4379793**	

Protective Shielding for NEMA Products

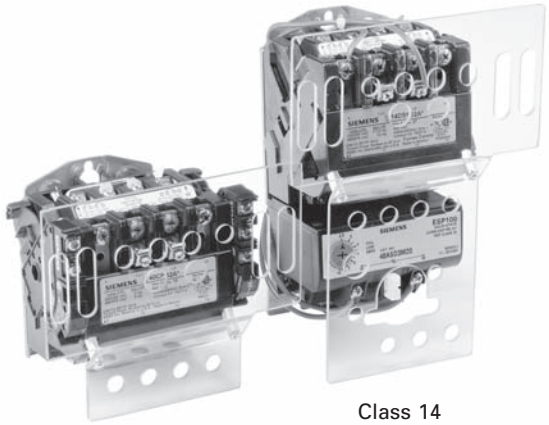

Class 14

Class 40

Disconnect with protective shield

Class 14, 22, 30, 40, 43

Contactor or Starter Size	00–1¾	List Price $	2–2½	List Price $	3–3½	List Price $	4	List Price $
Contactor Shield Catalog Number	49PSC1		49PSC2		49PSC3		49PSC4	
Starter Shield Catalog Number	49PSS1		49PSS2		49PSS3		49PSS4	

Class 17, 25, 32, 87

Disconnect Size	Catalog Number	List Price $
30A	49PSD5	
60 & 100A	49PSD6	
200A	49PSD7	

Power Pole Kits	Class	Enclosure type	Contactor Size (Amp)	Description	Field Kit Catalog No.
	LC	Open, 1, 12, 4/4X	30	Single power pole Double power pole	49LCPP1A 49LCPP2A

Electrically Held to Mechanically Held Conversion Modules	Class	Enclosure type	Contactor Size (Amp)	Description	Field Kit Catalog No.
	LC	Open, 1, 12, 4/4X	30	2-wire, 24VAC 2-wire, 110-120VAC 2-wire, 200-277VAC 3-wire, 24VAC 3-wire, 110-120VAC 3-wire, 200-277VAC	49LCCM1A 49LCCM2A 49LCCM3A 49LCCM4A 49LCCM5A 49LCCM6A

① These kits are only for use with 20A mechanically held lighting contactors.

Starter/Contactor Auxiliary Contact Kits

Description	Class	Size	Type	Catalog Number	List Price $
	14, 17, 18, 22, 25, 26, 30, 32, 36, 37, 40, 43, 83, 84, 87, 88	00-4	1 NO	**49AB10**	
			1 NC	**49AB01**	
			1 NC Early Break	**49AB01EB**	
			1 NC Late Break	**49AB01LB**	
			1 NC Extra Late Break	**49AB01XLB**	
			1 NO Extra Late Make	**49AB10XLM**	
			1 NO & 1 NC	**49AB11**	
			2 NO	**49AB20**	
			4 NO	**49AB40**	
			3 NO & 1 NC	**49AB31**	
			2 NO & 2 NC	**49AB22**	
	14, 17, 18, 22, 25, 26, 36, 37, 40, 43, 87, 88	5, 6	2 NO	**3RH1921-1EA20**	
			1 NO & 1 NC	**3RH1921-1DA11**	
			2 NC	**3RH1921-1EA02**	
	14, 17, 18, 22, 25, 26 40, 43	7, 8	1 NO & 1 NC (Inside L or R)	**49CAL18-11**	
			1 NO & 1 NC (Outside L or R)	**49CAL18-11B**	
	LC	30	1 NO/NC	**49LCAC1PA**	
			2 NO/NC	**49LCAC2PA**	
	LE	20	Front Mounted 1 NO/NC	**3RH2911-1HA11**	
		30	Side Mounted 1 NO/NC	**3RH2911-1DA11**	
		60-400	Side Mounted 1 NO/NC	**3RH1921-1EA11**	
	CLM, CMN, CMF, CMB	20 Amps	1 NO/NC SPDT	**CLM4097291**	
			2 NO/NC SPDT	**CLM4097292**	
		30-200 Amps	1 NO & 1 NC	**CLMFCAK11**	
			2 NC	**CLMFCAK02**	
			2 NO	**CLMFCAK20**	
			1 Coil Clearing NO & NC	**CLMFCCK11**	
		300-400 Amps	1 NO & 1 NC	**CLMHCAK11**	
			2 NC	**CLMHCAK02**	
			2 NO	**CLMHCAK20**	
			1 Coil Clearing NO & NC	**CLMHCCK11**	

Disconnect Auxiliary Switch Kits

Description	Class	Disconnect Amp or CB Rating	Type	Catalog Number	List Price $
Non-fusible or Fusible Type	17, 25, 32, 37, 83, 84, 87, 88, LED, LEF, CMN, CMF	30 - 200A	2 NO/2 NC DPDT (NEMA A600)	**HA261234**	
MCP	18, 26, 32, 37, 83, 84, 87, 88, LEB, CMB	3A–125A	1 NO/1 NC 240V	**A02ED62**	
		250A	1 NO/1 NC 480V	**A02FD64**	
		400A-600A	(2) 1 NO/1 NC SPDT-480V	**A02JLD64**	

Control Power Transformer Kits①③

Description	Recommended Transformer Size: Control Size	Recommended Transformer Size: Transformer VA	VA Rating	Catalog Number	List Price $	Transformer Table: Primary Volts	Transformer Table: Secondary Volts	Transformer Table: Code
Transformer 50/60HZ	00–2½	45 or 50③	45 VA	**KT*050②③**		120	24	**1**
	3–3½	75	50 VA	**KT*050P③**		208	24	**G**
	4	150	100 VA	**KT*100**		208	120	**H**
	5-6	150	150 VA	**KT*150**		240/480	24	**4**
	7-8	300	200 VA	**KT*200**		240/480	120	**8**
	Lighting Control		300 VA	**KT*300**		277	24	**5**
	CLM		500 VA	**KT*500**		277	120	**7**
	20A, 2 - 12P	150				600	24	**6**
	30A, 3P	100				600	120	**9**
	30A, 6 - 12P	200						
	60A, 3P	100						
	60A, 4 - 6P	150						
	60A, 8 - 12P	250						
	100/200A, 3P	200						
	100/200A, 5P	250						
	300/400A, 3P	250						
	LC & LE							
	LC 30A, 2-12P	100						
	LE 20, 30, 60A, 3 & 4P	45						
	LE 30A, 6P	45						
	LE 30A, 9-12P	100						
	LE 60A, 6-12P	150						
	LE 100, 200A, 3P	100						
	LE 300, 400A, 3P	150						

Replace * with code from Transformer table. Kits used with NEMA 1 general purpose lift-off cover type require extra wide enclosure.
Class 14 Sizes 0-2½
Class 30 (2S2W) Sizes 0-2½
Class 30 (2S1W) Sizes 0-1¾

① Installation of CPTs may require a larger enclosure.
② 45VA transformer kits will include secondary but not primary fusing. Sizes 50VA and higher include 2-pole primary fusing and 1-pole secondary fusing.
③ For 24VAC control a minimum of 100VA CPT is required.

Accessories

Description				Catalog Number	List Price $
	ESP200 Tamper Resistance Cover			**49ASTC1** **3UB89848**	
	ESP100/200 Mounting Plate	**Frame Size**	**Controller Size**		
		A or A1	00 - 1 3/4	**49ASMP1**	
		B	2 -2 1/2	**49ASMP2**	
		B	3-4	**49ASMP3**	
	Mounting Kit			**49ASMS1**	
	Universal Reset Operator 8" for class 36, 37 and 87 in NEMA 1, 12 and 3/3R			**49MARB**	
	Overload Relay Reset Operator for Class 14, 22, 30 and 83 non-combination starters in NEMA type 1, 12 and 4/4X enclosures			**49MBRS**	
	Overload Relay Reset Operator for Class 17, 18, 25, 26, 32 and 84 combination starters in NEMA type 1 enclosures			**49MBRS1**	
	Overload Relay Reset Operator for Class 17, 18, 25, 26, 32 and 84 combination starters in NEMA type 12 and 4/4X enclosures			**49MBRS2**	
	Overload Relay Reset Operator with red button for any Class in NEMA type 1, 3R, 4/4X and 12 enclosures with a 30mm hole			**49MARSR**	
	ESP200 Reset Extender			**49ASRE**	
	Protective Boot Offers protection from ice and foreign substances from interfering with button operation. For use with 49MARSR reset.			**52AABA**	
	Current Transformer 300:5 use with **3UB81234JW2**			**97CT005**	
	Current Transformer 400:5 use with **3UB81234KW2**			**97CT006**	
	Current Transformer 600:5 use with **3UB81234LW2**			**97CT008**	
	Current Transformer 750:5 use with **3UB81234MW2**			**97CT009**	
	Current Transformer 1200:5 use with **3UB81234NW2**			**97CT012**	

Miscellaneous Kits

Description			Class	Encl. Type	Controller Size	Catalog Number	List Price $
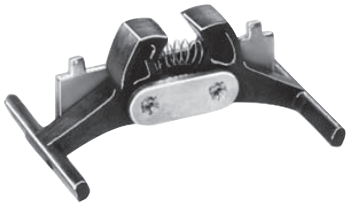	Mechanical Interlock for Horizontally Mounted Contactors	Includes wire	14, 40	Open	00–1 1¾ 2, 2½ 3, 3½ 4	**49CCF22H** **49EEF22H** **49GGF22H** **49HHP22H** **49JJG22H**	
		Interlock Only	14, 40	Open	5, 6	**3RA1954-2A**	
		Wire Kit Only			5 6	**3RA1963-2A** **3RA1973-2A**	
		Base Plate Only			5 6	**3RA1962-2A** **3RA1972-2A**	
		Mechanical Interlock	14, 40	Open	7 8	**49VM750H** **49VM1650H**	
		Includes wire & mounting plate	14, 40	Open	00–1 1¾ 2, 2½ 3, 3½ 4	**49CCF22HP** **49EEF22HP** **49GGF22HP** **49HHP22HP** **49JJG22HP**	
		Includes mounting plate (Different Frame Sizes)	14, 40	Open	Left Right 2, 2½ 3, 3½ 3, 3½ 2, 2½	**49L107944** **49L107945**	
	Surge Suppressor	Surge Suppressor for 120V AC coil. Limits transient voltage produced by the coil to 220% maximum peak line volts.	All but Class LC, LE, CLM	All	00–4①	**49D26344**	
	Auxiliary Power Pole	NO 36A at 600V AC Max NC 25A at 600V AC Max	All but Class LC, LE, CLM	All	00–1¼	**49SAF0** **49SAFC**	
	Main Contacts Lighting Contactors	Top or Bottom, 2-Pole Top, 3-Pole Top or Bottom, 4-Pole Top or Bottom, 6-Pole	CLM	All	20 Amps	**CLM4097331** **CLM4097332** **CLM4097333** **CLM4097334**	
	Load Side Power Take Off Kit	Includes 3 power lugs for making extra connections to the load side of the contactor	All but Class LC, LE, CLM	All	00–1¾	**49SAE**	
	Lug Kit for Contactors Item / Wire Range 49SAAF / 2-14 49SAAH / 2/0-14 75D35994001 / 250MCM-6	For AL/CU Wire	14, 40	All	2-2½ 3-3½ 4 Line 4 Load	**49SAAF③** **49SAAH③** **75D35994002③**	
		For AL/CU Wire	14, 40	All	5, 6	**3RT1966-4G②**	
		Use CU Only	14, 40	All	7 8	**49ZATK750-3②** **49ZATK1650-6②**	
	Three Conductor Ground Lug Kit Meets UL 508 and CSA Standard 22.2 No 14-1973	2-14 AWG AL/CU Wire	All	All	All	**75D28182001**	
	Lightning Arrestor		All	All	All	**49D45584002**	
	Backspin Timer	On delay timer that reduces risk of starting into a backspin	87, 88	All	All	**3RP2025-1AQ30** **3RP2025-1AP30**	
	Hole Plug	Covers the hole that is typically used for the conduit hub	87	All	1-4	**49D41149006**	
	Hole Plug	Covers the hole in the enclosure door/cover normally filled by overload reset 49MBRS. Hole plug is used for enclosed contactors.	40, 43, LC, LE, CLM & CM	1	All	**49MZPB2**	

Illustration	Description	Contactor	Wire Size	Catalog Number	List Price $
 3RT1966-4G	**Lug Kit** 1 Kit = 1 Terminal block. 1 kit necessary for each line and load.	NEMA size 4 (Vacuum) NEMA size 5 NEMA size 6	2/0 to 600 MCM, max. one 500MCM & one 600MCM	3RT1966-4G	

① Surge Suppression for NEMA sizes 5 – 8 are supplied internal with the coil. For size 4 panel mount.

② Only 3 lugs are suplied for line or load. If lugs for line and load are required order 2 kits.

③ Lug Kit for contactors include 3 lugs for line or load. **75D35994001** for line side. **75D35994002** for load side.

Fused and Non-Fused Disconnect Switch Kits②

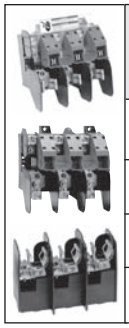

Basic Switch Ampere Rating	Switch Catalog Number Non-Fused	List Price $	Switch Catalog Number Fused	List Price $	Kit Description	Load Base Catalog Number Class J	List Price $	Load Base Catalog Number Class H③	List Price $	Lug Wire Size
30	HNB612		HFB21		30A, 250V	—	—	HBB21		#14-2 AWG (Cu/Al)
			HFB612		30A, 600V	HBB612		HBB612		
60	HNB623		HFB22		60A, 250V	—	—	HBB22		#14-2 AWG (Cu/Al)
			HFB62		60A, 600V	HBB62		HBB62		
100	HNB623		HFB63		100A, 250V	—	—	HBB63		#14-1/0 AWG (Cu/Al)
					100A, 600V	HBB63				
200	HNB64		HFB64		200A, 250V	—	—	HBB64		#6-300 AWG (Cu/Al)
					200A, 600V	HBB64				

Class R Fuse Conversion Kits

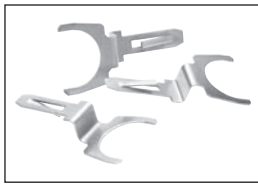

Catalog Number	Description	List Price $
HR21	30A, 240V	
HR612	30A, 600V	
HR612	60A, 240V	
HR62	60A, 600V	
HR63	100A, 240/600V	
HR64	200A, 240/600V	

Hazardous Location Accessories For Enclosure Types 7 & 9

		Description	Conduit Size Inches	Catalog Number	List Price $
Breather/Drain		Install in bottom as drain. Install in top as breather. Suitable for Class I groups C & D and for Class II groups F & G applications only. for ½" NPT.		51AADB	

Metal Conduit Hubs

Description	Conduit Size	Class	Controller Size	Enclosure Type	Milbank Catalog No.④
	1"	87	All	3R	A7514
	1 1/2"				A7516
	2"				A7517
	2 1/2"				A7518

① Product Category: PILO.
② Product Category: HDSS.
③ For Class R fuses order Class H kit from this table and the Class R conversion kit.
④ Milbank catalog numbers are for reference only. Milbank conduit hubs are not sold by Siemens but can be purchased at a typical electrical hardware and supply distributor.

Sirius 3RB20

Illustration	Description		For Overload Type	Catalog Number	List Price $
	Reset mechanisms				
Reset plunger with reset button	**Reset plunger** Mounts directly to overload relay. Requires separate reset operator in enclosure door. Kit includes reset plunger, holder and funnel.		3RB206	**3RU1900-1A**	
	Flexible cable reset mechanism Requires a 6.5 mm hole in the enclosure with a maximum enclosure thickness of 8 mm.	Cable length 15.75 in (400mm)	3RB206	**3RU1900-1B**	
Flexible reset		Cable length 23.62 in (600mm)		**3RU1900-1C**	
	Covers Tamper resistant cover for current setting and manual/automatic reset button.		3RB206	**3RB2984-0**	

Competitive Retrofit Overload Plates

Manufacturer	NEMA Size	Plate Part Number	List Price $
A-B	0, 1	**49D57090**	
A-B	2	**49D57161**	
Sq. D	0, 1	**49D57091**	

Electronic Coil System with Remaining Lifetime Indication and 24VDC PLC Output

Class	Size	Model Type	21 - 27V		96 - 127V		200 - 277V	
			Catalog Number	List Price $	Catalog Number	List Price $	Catalog Number	List Price $
All	5	P	–	–	**3RT1965-5PF31**		**3RT1965-5PP31**	
		V	–	–	**3RT1966-5PF31**		**3RT1966-5PP31**	
	6	P	–	–	**3RT1975-5PF31**		**3RT1975-5PP31**	
		V	–	–	**3RT1976-5PF31**		**3RT1976-5PP31**	

Fuse Blocks, Touch-Safe Terminal Covers

Catalog Number	Description	List Price $
KCCF1G	SECONDARY FUSE BLOCK,1P,250V MAX	
KCCFBCK	SINGLE POLE FUSE BLOCK COVER KIT	
KCCFP2RG	2 Pole PRIMARY FUSE BLOCK,2P,600V MAX (block only)	
KCCFPX2R	2 Pole PRIMARY FUSE BLOCK KIT with wire Leads	
US2:49FCCPT	Secondary Fuse Clips, 2 per pack	
US2:49JUCPT	Terminal Jumpers	
US2:KCCSECFCVR	Terminal touchsafe cover Secondary Side	
US2:KCCFP3POLE	3 pole fuse blk (2 pole primary and 1 pole secondary)	

International Fusing①

Catalog Number	Description	List Price $
8WA1011-1SF12	1-Pole Fuse Block, Touch-Safe. Up to 6.3A for 5 mm × 20 mm or 5 mm × 25 mm (Requires DIN Rail Mounting)	
3NW7013	1-Pole Fuse Block, Touch-Safe 32A, for 10 × 38 mm Cylindrical Fuses. (Requires DIN Rail Mounting.)	
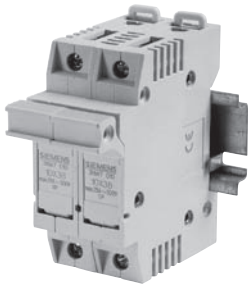 3NW7023	2-Pole Fuse Block, Touch-Safe 32A, for 10 × 38 mm Cylindrical Fuses. (Requires DIN Rail Mounting.)	
3NW7111	1-Pole Fuse Block, Touch-Safe 4-50A, for 14 × 51 mm Cylindrical Fuses. (Requires DIN Rail Mounting.)	
8WA1815	Fuse Block DIN Rail Mounting for separate screw mounting to panel. (Max 2-pole 2-25A size per rail.) (Max 1-pole 4-50A size per rail.)	

① Product Category: IEC.

Non-Combination Enclosure Kits, Class 49

Selection

49	E	B	14	E	B	11	07	05	R

Class
49 — Field Kit

Type
E — Enclosure Only

Model
B — Model
C — 2002

Product Class
14 — Class 14, 40
22 — Class 22, 43
30 — Class 30

Starter Size
E — 00, 0, 1, 1¾
G — 2, 2½
I — 3, 3½
J — 4

NEMA Type
B — NEMA 1
0 — NEMA 12/3/3R
W — NEMA 4 S.S.

Height (In Inches)

Width (In Inches)

Depth (In Inches)

Reset Installation
R — Reset

Non-Reversing Starters & Contactors Class 14, 40

	NEMA 1 General Purpose (Clamshell)①④					NEMA 4/4X Stainless Watertight, Dust-tight, Corrosion Resistant②⑥					NEMA 12/3/3R Industrial Use, Weatherproof②④				
	Without CPT		With CPT (Extra Wide)			Without CPT		With CPT (Extra Wide)			Without CPT		With CPT (Extra Wide)		
	Model C Enclosure		Model C Enclosure			Model B Enclosure		Model B Enclosure			Model B Enclosure		Model B Enclosure		
Size	Catalog Number	List Price $	Catalog Number	Max CPT VA	List Price $	Catalog Number	List Price $	Catalog Number	Max CPT VA	List Price $	Catalog Number	List Price $	Catalog Number	Max CPT VA	List Price $
00–1¾	49EC14EB110705R		49EC14IB201208R	200		49EB14EW130806R		49EB22EW131306R			49EB14E0130806R		49EB22E0131306R		
2, 2½	49EC14GB140807R		49EC14IB201208R	200		49EB14GW160907R		49EB22GW161406R			49EB14G0160907R		49EB22G0161406R		
3, 3½	49EC14IB201208R		49EC14IB201208R	100		49EB14JW261408R		49EB14JW261408R			49EB14J0261408R		49EB14J0261408R		
3, 3½	—	—	49EC14JB251409R	250		—	—	—		—	—	—	—		—
4	49EC14JB251409R		49EC14JB251409R	300		49EB14JW261408R		49EB22JW302410R			49EB14J0261408R		49EB22J0302410R		

Reversing Starters & Reversing Contactors Class 22, 43

	NEMA 1 General Purpose (Clamshell)①④					NEMA 4/4X Stainless Watertight, Dust-tight, Corrosion Resistant②⑤					NEMA 12/3/3R Industrial Use, Weatherproof②④				
	Without CPT		With CPT (Extra Wide)			Without CPT		With CPT (Extra Wide)			Without CPT		With CPT (Extra Wide)		
	Model C Enclosure		Model C Enclosure			Model B Enclosure		Model B Enclosure			Model B Enclosure		Model B Enclosure		
Size	Catalog Number	List Price $	Catalog Number	Max CPT VA	List Price $	Catalog Number	List Price $	Catalog Number	Max CPT VA	List Price $	Catalog Number	List Price $	Catalog Number	Max CPT VA	List Price $
00–1¾	49EC14IB201208R		49EC14IB201208R	200		49EB22EW131306R		49EB22EW131306R			49EB22E0131306R		49EB22E0131306R		
2, 2½	49EC14IB201208R		49EC14IB201208R	200		49EB22GW161406R		49EB22GW161406R			49EB22G0161406R		49EB22G0161406R		
3, 3½	49EC14JB251409R		49EC14JB251409R	250		49EB22IW261808R		49EB22JW302410R			49EB22I0261808R		49EB22J0302410R		
4	49EC14JB251409R		49EC14JB251409R	300		49EB22JW302410R		49EB22JW302410R			49EB22J0302410R		49EB22J0302410R		

Two-Speed Two-Winding Starters Class 30

	NEMA 1					NEMA 4/4X Stainless Watertight, Dust-tight, Corrosion Resistant②⑤					NEMA 12/3/3R Industrial Use, Weatherproof②④				
	Without CPT		With CPT (Extra Wide)			Without CPT		With CPT (Extra Wide)			Without CPT		With CPT (Extra Wide)		
	Model C Enclosure		Model C Enclosure			Model B Enclosure		Model B Enclosure			Model B Enclosure		Model B Enclosure		
Size	Catalog Number	List Price $	Catalog Number	Max CPT VA	List Price $	Catalog Number	List Price $	Catalog Number	Max CPT VA	List Price $	Catalog Number	List Price $	Catalog Number	Max CPT VA	List Price $
0–1¾	49EC14IB201208R①		49EC14JB251409R①	200		49EB30EW131306R		49EB30GW161808R			49EB30E0131306R		49EB30G0161808R		
2, 2½	49EC14IB201208R①		49EC14JB251409R①	200		49EB30GW161406R		49EB30GW161808R			49EB30G0161406R		49EB30G0161808R		
3, 3½	49EC14JB251409R①		49EB22JB302410R②	300		49EB30IW261808R		49EB22JW302410R			49EB30I0261808R		49EB22J0302410R		
4	49EC14JB251409R①		49EB22JB302410R②	300		49EB22JW302410R		49EB22JW302410R			49EB22J0302410R		49EB22J0302410R		

Two-Speed One-Winding Starters Class 30

	NEMA 1 General Purpose (Clamshell)①③					NEMA 4/4X Stainless Watertight, Dust-tight, Corrosion Resistant②⑤					NEMA 12/3/3R Industrial Use, Weatherproof②④				
	Without CPT		With CPT (Extra Wide)			Without CPT		With CPT (Extra Wide)			Without CPT		With CPT (Extra Wide)		
	Model C Enclosure		Model C Enclosure			Model B Enclosure		Model B Enclosure			Model B Enclosure		Model B Enclosure		
Size	Catalog Number	List Price $	Catalog Number	Max CPT VA	List Price $	Catalog Number	List Price $	Catalog Number	Max CPT VA	List Price $	Catalog Number	List Price $	Catalog Number	Max CPT VA	List Price $
0–1¾	49EC14IB201208R①		49EC14JB251409R①	200		49EB30EW131306R		49EB30GW161808R			49EB30E0131306R		49EB30G0161808R		
2, 2½	49EB30GB161808R②		49EB22JB302410R②	300		49EB30GW161808R		49EB22IW261808R			49EB30G0161808R		49EB22I0261808R		
3, 3½	49EB30IB192208R②		49EB22JB302410R②	300		49EB22JW302410R		49EB22JW302410R			49EB22J0302410R		49EB22J0302410R		
4	49EB22JB302410R②		49EB22JB302410R②	300		49EB22JW302410R		49EB22JW302410R			49EB22J0302410R		49EB22J0302410R		

Note: Dimensions...See appropriate Product Class Outline Drawing beginning on page 9/157.

① Clamshell enclosure suitable for one operating device and two pilot lights. See Field Mods page 9/104.

② Hinged cover enclosures, except for **49EB14E0130806R**, are suitable for one or more class 52 operating devices and one or more class 52 pilot lights. See Field Mods page 9/100.

③ Install NEMA 1 hole plug cat. no. **3SB1902-0AR** (included) when the cover OL reset is not needed.

④ Install NEMA 12 hole plug cat. no. 52ABH6 (not included) when the cover OL reset is not needed.

⑤ Install NEMA 4X stainless steel hole plug cat. no. **52ABHS** (not included) when the cover OL reset is not needed.

Lighting Enclosure Tables

Selection

Lighting Contactors Class LC and LE

Contactor	Type 1			Type 4/4X Stainless Steel①			Type 3/3R/12②		
	Without CPT	With CPT	Max.	Without CPT	With CPT	Max.	Without CPT	With CPT	Max.
	Catalog Number	Catalog Number	CPT VA	Catalog Number	Catalog Number	CPT VA	Catalog Number	Catalog Number	CPT VA
LC 30A 2-12P	**49EC14GB140807R**	**49EC14IB201208R**	200	**49EB22GW161406R**	**49EB30GW161808**		**49EB22G0161406R**	**49EB30G0B161808**	
LE 20, 30A 3-4P	**49EC14EB110705R**	**49EC14IB201208R**	200	**49EB22GW161406R**	**49EB22GW161406R**		**49EB22G0161406R**	**49EB22G0161406R**	
LE 30A 6-9P	**49EC14IB201208R**	**49EC14IB201208R**	200	**49ECLXXW161406**	**49EB14JW261408R**		**49ECLXX0161406**	**49EB14J0261408R**	
LE 30A 12P	**49EC14IB201208R**	**49EC14JB251409R**	250	**49ECLXXW161406**	**49EB14JW261408R**		**49ECLXX0161406**	**49EB14J0261408R**	
LE 60A 3P	**49EC14GB140807R**	**49EC14IB201208R**	200	**49EB22GW161406R**	**49EB22GW161406R**		**49EB22G0161406R**	**49EB22G0161406R**	
LE 60A 6-9P	**49EC14IB201208R**	**49EC14IB201208R**	200	**49ECLXXW161406**	**49EB14JW261408R**		**49ECLXX0161406**	**49EB14J0261408R**	
LE 60A 12P	**49EC14IB201208R**	**49EC14IB201209R**	250	**49ECLXXW161406**	**49EB14JW261408R**		**49ECLXX0161406**	**49EB14J0261408R**	
LE 100A 3P	**49EC14IB201208R**	**49EC14IB201208R**	200	**49ECLXXW161406**	**49EB14JW261408R**		**49ECLXX0161406**	**49EB14J0261408R**	

Lighting & Heating Contactors Class CLM

		NEMA 1 General Purpose (Clamshell)①③					NEMA 4/4X Stainless Watertight, Corrosion Resistant②⑤					NEMA 12/3/3R Industrial Use②④				
		Without CPT		With CPT (Extra Wide)			Without CPT		With CPT (Extra Wide)			Without CPT		With CPT (Extra Wide)		
		Model C/B Enclosure		Model C/B Enclosure			Model B Enclosure		Model B Enclosure			Model B Enclosure		Model B Enclosure		
Size	Pole	Catalog Number	List Price $	Catalog Number	Max CPT	List Price $	Catalog Number	List Price $	Catalog Number	Max CPT	List Price $	Catalog Number	List Price $	Catalog Number	Max CPT	List Price $
20A	2-12	**49EC14GB140807R**		**49EC14IB201208R**	200VA		**49EB22GW161406R**		**49EB22GW161406R**	—		**49EB22G0161406R**		**49EB22G0161406R**	—	
30A	2-5	**49EC14EB110705R**		**49EC14IB201208R**	200VA		**49EB22GW161406R**		**49EB22GW161406R**	—		**49EB22G0161406R**		**49EB22G0161406R**	—	
30A	6-12	**49EB30GB161808R**		**49EB30GB161808R**	200VA		**49ECLXXW161406**		**49EB30GW161808R**	—		**49ECLXX0161406**		**49EB30G0161808R**	—	
60A	2-5	**49EC14GB140807R**		**49EC14IB201208R**	200VA		—	—	—	—	—	—	—	—	—	—
60A	6-12	**49EB30IB192208R**		**49EB30IB192208R**	250VA		—	—	—	—	—	—	—	—	—	—
100A	2-5	**49EC14IB201208R**		**49EC14IB201208R**	200VA		—	—	—	—	—	—	—	—	—	—

Note: Dimensions...See appropriate Product Class Outline Drawing on page 9/170.

① Clamshell enclosure suitable for one operating device and two pilot lights. See Field Mods page 9/104.

② Hinged cover enclosure suitable for one or more class 52 operating devices and one or more class 52 pilot lights. See Field Mods page 9/104.

③ Install NEMA 1 hole plug cat. no. **3SB1902-0AR** (included) when the cover OL reset is not needed.

④ Install NEMA 12 hole plug cat. no. 52ABH6 (not included) when the cover OL reset is not needed.

⑤ Install NEMA 4X stainless steel hole plug cat. no. **52ABHS** (not included) when the cover OL reset is not needed.

Features and Benefits

Features

- Manufactured with a cold forming "TOX" process
- 100kA short circuit rating when protected with class R fuses to 600V or MCP to 480V and when installing listed components from the instruction guide
- Enclosure types available, Nema 1, 12, 3/3R and painted NEMA 4. Nema 12 field convertible to 3/3R/4 with the appropriate conduit hub and drain hole
- Pre-Drilled mounting panels
- Heavy duty quarter turns
- Industrial type disconnect handle

Disconnect Type Enclosure Kit

- Used to assemble both non-fusible and fusible combination starters
- Accommodates Class 14 full voltage non-reversing (FVNR) NEMA starters 00 – 4 including Siemens exclusive half sizes
- Handle mechanism, power wire, mounting panel, reset assembly, and instruction guide included. Hardware for panel mounted devices and disconnect switch are not included

MCP Type Enclosure Kit

- Used to assemble combination starters with circuit breakers
- Accommodates Class 14 full voltage non-reversing (FVRN) NEMA starters 00 – 4 including Siemens exclusive half sizes
- Handle mechanism, power wire, mounting panel, reset assembly and instruction guide included. Circuit breaker not included however, mounting hardware for the circuit breaker is

How to Select the Required Kits to Assemble a Combination Starter

1. From the catalog, select a class 14 open type starter with the required starter size and overload relay type.
2. Based on the starter size, select the enclosure kit from table 1a for fusible or non-fusible combination starters or select from table 1b for combination starters with an MCP.
3. For a non-fusible combination starter, select the disconnect switch kit from table 2a. For a fusible combination starter, select the appropriate disconnect switch, fuse clip kit, and class R rejection kit from table 2b (for H fusing, class R rejection kit not required). For combination starters with MCP, select the appropriate circuit breaker kit from table 3.

Nomenclature for Combination Enclosure Kits

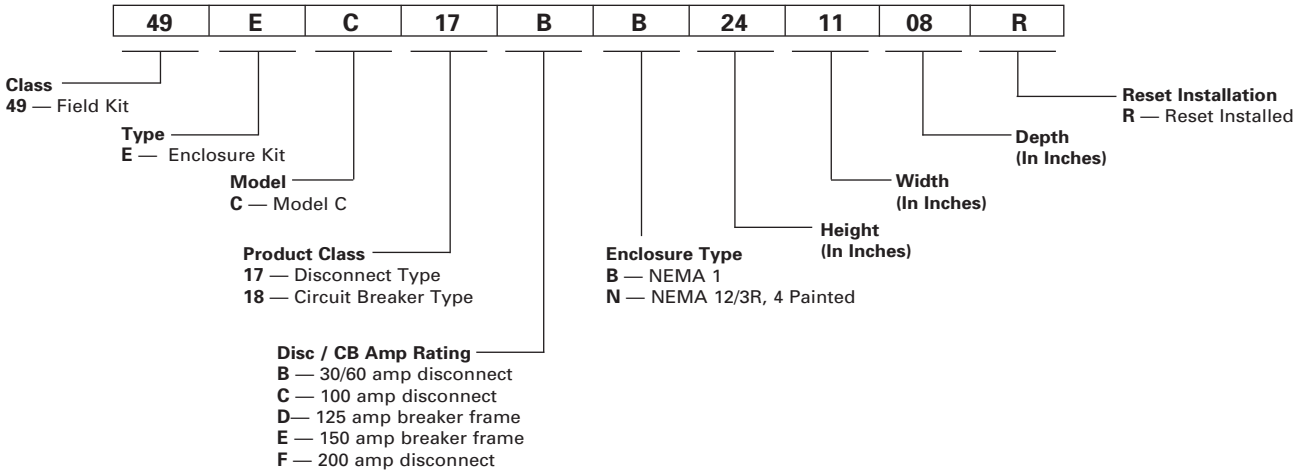

Selection

Table 1a - FVNR Combination Starter Kits for use with Disconnect Devices

Starter Size	Disc. Amp Rating	NEMA 1 General Purpose		NEMA 12, 3/3R, 4 Painted Industrial Use, Weatherproof, Watertight, Dust-tight		NEMA 4/4X Stainless Steel Watertight, Dust-tight, Corrosion Resistant	
		Catalog Number	List Price $	Catalog Number	List Price $	Catalog Number	List Price $
0 - 2	60	**49EC17BB241108R**		**49EC17BN241108R**		**49EC17BW241108R**	
2 ½ - 3	100	**49EC17CB242008R**		**49EC17CN242008R**		**49EC17CW242008R**	
3 ½ - 4	200	**49EC17FB362408R**		**49EC17FN362408R**		**49EC17FW362408R**	

Table 1b. – FVNR Combination Starter Kits for use with MCP Devices

Starter Size	Max MCP Amps	NEMA 1 General Purpose		NEMA 12, 3/3R, 4 Painted Industrial Use, Weatherproof, Watertight, Dust-tight		NEMA 4/4X Stainless Steel Watertight, Dust-tight, Corrosion Resistant	
		Catalog Number	List Price $	Catalog Number	List Price $	Catalog Number	List Price $
0 - 2	50	**49EC18DB241108R**		**49EC18DN241108R**		**49EC18DW241108R**	
2 ½ - 3	125	**49EC18DB242008R**		**49EC18DN242008R**		**49EC18DW242008R**	
3 ½	125	**49EC18DB362408R**		**49EC18DN362408R**		**49EC18DW362408R**	
4	150	**49EC18EB362408R**		**49EC18EN362408R**		**49EC18EW362408R**	

Table 2a – Non-Fusible Disconnect Kits

Disconnect Switch		
Switch Rating	Catalog Number	List Price $
30A	**HNB612**	
60A	**HNB623**	
100A	**HNB623**	
200A	**HNB64**	

Table 2b – Fusible Disconnect Kits

Fuse Clip Ratings	Class	Disconnect Switch		Load Base for Fuse		Rejection Clips for Class R Fusing	
		Catalog Number	List Price $	Catalog Number	List Price $	Catalog Number	List Price $
30A-250V	H	**HFB21**		**HBB21**		**HR21**	
30A-600V	H	**HFB612**		**HBB612**		**HR612**	
60A-250V	H	**HFB22**		**HBB22**		**HR612**	
60A-600V	H	**HFB62**		**HBB62**		**HR62**	
100A-250V	H	**HFB63**		**HBB63**		**HR63**	
100A-600V	H	**HFB63**		**HBB63**		**HR63**	
200A-250V	H	**HFB64**		**HBB64**		**HR64**	
200A-600V	H	**HFB64**		**HBB64**		**HR64**	

Table 3 – Circuit Breaker Kits

Starter Size	MCP Type Used with Solid State Overload Relay			MCP Type Used with Thermal Overload Relay	
	Overload Amp Range	Motor Circuit Interrupter Amps	Circuit Breaker Kit	Motor Circuit Interrupter Amps	Circuit Breaker Kit
0	0.75-3.4	3	**ED63A003**	3	**ED63A003**
	3-12	10	**ED63A010**	10	**ED63A010**
	5.5-22	25	**ED63A025**	25	**ED63A025**
1	0.75-3.4	3	**ED63A003**	3	**ED63A003**
	3-12	10	**ED63A010**	10	**ED63A010**
	5.5-22	25	**ED63A025**	25	**ED63A025**
	10-40	30	**ED63A030**	30	**ED63A030**
1 ¾	10-40	40	**ED63A040**	40	**ED63A040**
2	13-52	50	**ED63A050**	50	**ED63A050**
2 ½	25-100	100	**ED63A100**	100	**ED63A100**
3	25-100	100	**ED63A100**	100	**ED63A100**
3 ½	50-200	125	**ED63A125**	125	**ED63A125**
4	50-200	150	**FXD63A150L**	150	**FXD63A150L**

Class 87 Pump Panel Enclosure Kits

Selection

Ordering Information

- Replace the (*) with a letter from the coil table. Dual voltage coils are wired on high voltage unless specified on order.
- Refer to Class 87 section of catalog for pump panel ratings and other details.
- Handle mechanism, power wire, mounting panel, reset assembly and instruction guide are included with the enclosure kit.

Coil Table

60Hz Voltage	Letter
24	J
120	F
110–120/220–240	A①
200–208	D
220–240	G
220–240/440–480	C①
277	L
440–480	H
550–600	E

Pump Panels with Solid-State Overload Relay Class 87

To Field Assemble This Pump Panel:	Order these components: Enclosure Catalog Number	Starter with Solid-State Overload Relay	Disconnect Switch	Fuse Load Base	Class R Rejection Clips	Motor Circuit Interrupter	Enclosure List Price $
87DUB6F*	**49EB87GF242008**	14DUB32A*	HFB612	HBB612	HR612	—	
87DUC6F*	**49EB87GF242008**	14DUC32A*	HFB612	HBB612	HR612	—	
87DUD6F*	**49EB87GF242008**	14DUD32A*	HFB612	HBB612	HR612	—	
87DUD60*	**49EB87GF242008**	14DUD32A*	HFB62	HBB62	HR62	—	
87EUE6F*	**49EB87GF242008**	14EUE32A*	HFB612	HBB612	HR612	—	
87EUE60*	**49EB87GF242008**	14EUE32A*	HFB62	HBB62	HR62	—	
87FUF6F*	**49EB87GF242008**	14FUF32A*	HFB62	HBB62	HR62	—	
87FUF60*	**49EB87GF242008**	14FUF32A*	HFB63	HBB63	HR63	—	
87GUG6F*	**49EB87GF242008**	14GUG32A*	HFB62	HBB62	HR62	—	
87GUG60*	**49EB87GF242008**	14GUG32A*	HFB63	HBB63	HR63	—	
87HUG6F*	**49EB87JF362408**	14HUG32A*	HFB63	HBB63	HR63	—	
87HUG60*	**49EB87JM362408**	14HUG32A*	MCS620R	FCK620	SSRK34	—	
87IUH6F*	**49EB87JM362408**	14IUH32A*	MCS620R	FCK620	SSRK34	—	
87JUH6F*	**49EB87JM362408**	14JUH32A*	MCS620R	FCK620	SSRK34	—	
87DUC6L*	**49EB87GF242008**	14DUC32A*	HFB21	HBB21	HR21	—	
87DUD6L*	**49EB87GF242008**	14DUD32A*	HFB21	HBB21	HR21	—	
87DUE6L*	**49EB87GF242008**	14DUE32A*	HFB21	HBB21	HR21	—	
87DUE6P*	**49EB87GF242008**	14DUE32A*	HFB22	HBB22	HR612	—	
87EUE6L*	**49EB87GF242008**	14EUE32A*	HFB22	HBB22	HR612	—	
87FUF6L*	**49EB87GF242008**	14FUF32A*	HFB22	HBB22	HR612	—	
87FUF6P*	**49EB87GF242008**	14FUF32A*	HFB63	HBB63	HR63	—	
87GUG6L*	**49EB87GF242008**	14GUG32A*	HFB22	HBB22	HR612	—	
87GUG6P*	**49EB87GF242008**	14GUG32A*	HFB63	HBB63	HR63	—	
87HUG6L*	**49EB87JF362408**	14HUG32A*	HFB63	HBB63	HR63	—	
87HUG6P*	**49EB87JM362408**	14HUG32A*	MCS620R	FCK620	SSRK34	—	
87IUH6L*	**49EB87JM362408**	14IUH32A*	MCS620R	FCK620	SSRK34	—	
87JUH6L*	**49EB87JM362408**	14JUH32A*	MCS620R	FCK620	SSRK34	—	
87DUB6M*	**49EB87GB242008**	14DUB32A*	—	—	—	ED63A003	
87DUC6M*	**49EB87GB242008**	14DUC32A*	—	—	—	ED63A010	
87DUD6M*	**49EB87GB242008**	14DUD32A*	—	—	—	ED63A025	
87DUE6M*	**49EB87GB242008**	14DUE32A*	—	—	—	ED63A030	
87EUE6M*	**49EB87GB242008**	14EUE32A*	—	—	—	ED63A040	
87FUF6M*	**49EB87GB242008**	14FUF32A*	—	—	—	ED63A050	
87GUG6M*	**49EB87GB242008**	14GUG32A*	—	—	—	ED63A100	
87HUG6M*	**49EB87IB362408**	14HUG32A*	—	—	—	ED63A100	
87IUH6M*	**49EB87IB362408**	14IUH32A*	—	—	—	ED63A125	
87JUH6M*	**49EB87JB362408**	14JUH32A*	—	—	—	FXD63A150L	

① Dual voltage coils not available in size 5-8 starters.

Class 87 Pump Panel Enclosure Kits

Selection

Ordering Information

- Replace the (*) with a letter from the coil table. Dual voltage coils are wired on high voltage unless specified on order.
- Refer to Class 87 section of catalog for pump panel ratings and other details.
- Handle mechanism, power wire, mounting panel, reset assembly and instruction guide are included with the enclosure kit.

Coil Table

60Hz Voltage	Letter
24	J
120	F
110–120/220–240	A①
200–208	D
220–240	G
220–240/440–480	C①
277	L
440–480	H
550–600	E

Pump Panels with Bimetal Overload Relay Class 87

To Field Assemble This Pump Panel:	Order these components						Enclosure List Price $
	Enclosure Catalog Number	Starter with Bimetal Overload Relay	Disconnect Switch	Fuse Load Base	Class R Rejection Clips	Motor Circuit Interrupter	
87DAE6F*	**49EB87GF242008**	14DP32A*81	HFB612	HBB612	HR612	—	
87DAE60*	**49EB87GF242008**	14DP32A*81	HFB62	HBB62	HR62	—	
87EAF6F*	**49EB87GF242008**	14EP32A*81	HFB612	HBB612	HR612	—	
87EAF60*	**49EB87GF242008**	14EP32A*81	HFB62	HBB62	HR62	—	
87FAJ6F*	**49EB87GF242008**	14FP32A*81	HFB62	HBB62	HR62	—	
87FAJ60*	**49EB87GF242008**	14FP32A*81	HFB63	HBB63	HR63	—	
87GAK6F*	**49EB87GF242008**	14GP32A*81	HFB62	HBB62	HR62	—	
87GAK60*	**49EB87GF242008**	14GP32A*81	HFB63	HBB63	HR63	—	
87HAN6F*	**49EB87JF362408**	14HP32A*81	HFB63	HBB63	HR63	—	
87HAN60*	**49EB87JM362408**	14HP32A*81	MCS620R	FCK620	SSRK34	—	
87IAP6F*	**49EB87JM362408**	14IP32A*81	MCS620R	FCK620	SSRK34	—	
87JAR6F*	**49EB87JM362408**	14JG32A*81	MCS620R	FCK620	SSRK34	—	
87DAE6L*	**49EB87GF242008**	14DP32A*81	HFB21	HBB21	HR21	—	
87DAE6P*	**49EB87GF242008**	14DP32A*81	HFB22	HBB22	HR612	—	
87EAG6L*	**49EB87GF242008**	14EP32A*81	HFB22	HBB22	HR612	—	
87FAJ6L*	**49EB87GF242008**	14FP32A*81	HFB22	HBB22	HR612	—	
87FAJ6P*	**49EB87GF242008**	14FP32A*81	HFB63	HBB63	HR63	—	
87GAL6L*	**49EB87GF242008**	14GP32A*81	HFB63	HBB63	HR63	—	
87HAN6L*	**49EB87JF362408**	14HP32A*81	HFB63	HBB63	HR63	—	
87HAN6P*	**49EB87JM362408**	14HP32A*81	MCS620R	FCK620	SSRK34	—	
87IAP6L*	**49EB87JM362408**	14IP32A*81	MCS620R	FCK620	SSRK34	—	
87JAR6L*	**49EB87JM362408**	14JG32A*81	MCS620R	FCK620	SSRK34	—	
87DAA6M*	**49EB87GB242008**	14DP32A*81	—	—	—	ED63A003	
87DAB6M*	**49EB87GB242008**	14DP32A*81	—	—	—	ED63A010	
87DAD6M*	**49EB87GB242008**	14DP32A*81	—	—	—	ED63A025	
87DAE6M*	**49EB87GB242008**	14DP32A*81	—	—	—	ED63A030	
87EAF6M*	**49EB87GB242008**	14EP32A*81	—	—	—	ED63A040	
87EAG6M*	**49EB87GB242008**	14EP32A*81	—	—	—	ED63A050	
87FAH6M*	**49EB87GB242008**	14FP32A*81	—	—	—	ED63A040	
87FAJ6M*	**49EB87GB242008**	14FP32A*81	—	—	—	ED63A050	
87GAK6M*	**49EB87GB242008**	14GP32A*81	—	—	—	ED63A050	
87GAL6M*	**49EB87GB242008**	14GP32A*81	—	—	—	ED63A100	
87HAN6M*	**49EB87IB362408**	14HP32A*81	—	—	—	ED63A100	
87IAP6M*	**49EB87IB362408**	14IP32A*81	—	—	—	ED63A125	
87JAR6M*	**49EB87JB362408**	14JG32A*81	—	—	—	FXD63A150L	

① Dual voltage coils not available in size 5-8 starters.
② For NO/NC SPDT contact on overload, replace "81" with "91". "81" will give a NC contact.

Selection

Ordering Information

► All modifications will consist of Siemens standard components as available. Standard equipment dimensions and enclosure construction may not apply when certain modifications and special features are added.

Pilot Devices

Description	Modification	Class	Enclosure Type	Modification Code	List Price $
Push Buttons	Start, Stop	14, 17, 18, 36, 37, 40, 83, 84, CLM, CM, LC, LE	All	**A1**	⑤
	Forward, Reverse, Stop	22, 25, 26, 43	All	**A2**	
	High, Low , Stop	30, 32	All		
	E-Stop	14, 17, 18, 22, 25, 26, 30, 32, 36, 37, 40, 43	All	**ES**	
Selector Switches	Hand-Off-Auto	14, 17, 18, 36, 37, 40, 83, 84, LC, LE	All	**A3**	⑤
		CM, CLM	All	**A3**	
	For 24 volt HOA control, 20 Amp contactor only	CM, CLM	1	**EM**	
	Off-On	14, 17,18, 22, 25, 26, 30, 32, 36, 37, 40, 43, 83, 84, CLM, CM, LC, LE	All	**A4**	⑤
	Auto-Off	14, 17, 18, 40, 83, 84, CM, CLM, LC, LE	All	**A6**	⑤
	Forward-Off-Reverse	22, 25, 26, 43	All	**A5**	
	High-Off-Low	30, 32	All		
	Hand-Off-Auto (Keyed)	14, 17, 18, 36, 37, 40, 83, 84, LC, LE, CLM, CM	All	**A9**	⑤
	Auto-Off-Low-High	30, 32	All	**A0**	

Pilot Lights

Class	Enclosure Type	Lens Color →	Red	Green	Red	Green	Red	Green	Amber	White	Red Push-To-Test	Green Push-To-Test	Green Push-To-Test	LED Bulb Upgrade
		Legend→	On For/Rev Low/High	On For/Rev Low/High	Run	Run	Off	Off	OL Tripped	Control Power On	On For/Rev Low/High	On For/Rev Low/High	Off	
		Mod Code →	FA	FB	FC	FD	FJ	FK	FL④	FW	FS	FT	FU	FE①
14, 40, 17, 18, 36, 37, 87, 88, LC, LE, CLM, CM	All													
22, 25, 26, 30, 32, 43, 83, 84	All				⑧	⑧								

Coil Options

Class 14, 17, 18, 22, 25, 26, 30, 32, 40, 43, 83⑤, 84⑥, 87, 88					
			Controller Size — List Price $		
Volts 60 HZ	Volts 50 HZ	Coil Letter Change	00–2½	3, 3½	4
24	24	**J**			
120	110	**F**			
110–120/220–240	110/190–220	**A**			
200–208	—	**D**			
220–240	190–220	**G**			
277	240	**L**			
220–240/440–480	190–220/380–440	**C**			
440–480	380–440	**H**			
575–600	550	**E**			
DC Coil③	24V	**S**⑦			
	48V	**U**			
	125V	**V**	.		
	250V	**W**			

AC (50–60 HZ) or DC	Coil Letter Change	Controller Size 4 (Vacuum Only) Size 5 & 6 (ALL)
23–26V	**J**	
42–48V	**U**	
110–127V	**F**	
200–220V	**D**	
220–240V	**G**	
240–277V	**L**	
380–420V	**K**	
440–480V	**H**	
575–600V	**E**	

① Pilot lights are transformer type as standard. For LED type bulbs, order suffix FE in addition to the standard device suffix(es). For example, to order red "ON" and green "OFF" pilot lights with LED bulbs, order FA, FK and FE.

② DC coils include 1 NC, late break aux. contact. This aux. contact takes up one side of the starter (00–4 only).

③ Price x 2 for Classes 22, 25, 26, 30, 32, 43, 83, 84.

④ Bimetal OL - Size 00 - 2 1/2 available. Solid-state OL - Size 00 - 4, 7 & 8 available.

⑤ For Class 83, 84 two devices are provided. Price x 2.

⑥ For Class 83, 84 standard enclosure (92) alternating relay available in 24V or 120V control only.

⑦ S coil is not available for size 4 contactors or starters.

⑧ Class 83 and 84 only.

Selection

Ordering Information

► Replace (*) with letter from Transformer Table.

Transformer Table

Primary Volts	Secondary Volts	Letter
120	24	B
208	24	S
208	120	T
240	24	J
240	120	F
277	24	N
277	120	P
380	110	U
415	100	W
480	240	R
480/240	24	D
480/240	120	A
600	24	E
600	120	C

Control Power Transformers②

Description	Modification Code	Product Class	Enclosure Type	20–60	100	—	200	300–400	—	—	← Lighting & Heating Ratings (Amps)
				0–2½	3	3½, 4	5	6	7	8	← Motor Controller Size
Standard Capacity① with 1-Secondary Fuse	B*	14, 17, 18, 22, 25, 26, 30, 32, 40, 43, 83③, 84③, 87, LE	1, 3, 4, 12		—	—	—	—	—	—	
			7 & 9		—	—	—	—	—	—	
Standard Capacity with 2-Primary and 1-Secondary Fuse	D*	14, 17, 18, 22, 25, 26, 30, 32, 40, 43, 83③, 84③, 87, LC, LE, CLM, CM	1, 3, 4, 12								
			7 & 9								
100VA Extra Capacity with 2-Primary and 1-Secondary Fuse	C*	14, 17, 18, 22, 25, 26, 30, 32, 40, 43, 83③, 84③, 87, LC, LE, CLM, CM	1, 3, 4, 12								
			7 & 9								
		36, 37, 88	All						—	—	
150VA Extra Capacity with 2-Primary and 1-Secondary Fuse	C*1	14, 17, 18, 22, 25, 26, 30, 32, 40, 43, 83③, 84③, 87, LC, LE, CLM, CM	1, 3, 4, 12								
		36, 37, 88	All						—	—	

Factory Assembled Fuse Clips—Class 25, 32, 84④

Fuse Clip Amps	Volts	Modification Code	List Price $
30	250	10	
30	600	11	
60	250	12	
60	600	13	
100	250	14	
100	600	15	
200	250	16	
200	600	17	
400	250	18	
400	600	19	
600	250	20	
600	600	21	
800	600	23	
1200	600	24	
1600	600	25	

Note: Factory will furnish the same voltage coils as transformer secondary voltage (except with class 36,37).

① The standard control transformer supplied for starter sizes 0 through 2½ will be rated 45VA and have the appropriate secondary fuse. Primary fuses will not be supplied as standard. For primary fuse option select appropriate suffix from table.

② For 24VAC control a minimum of 100VA CPT required.
③ Price x 2 Class 83 and 84.
④ Class 84 Duplex Controllers require two fusible disconnects thus multiply the price adder by two.

Selection

Additional Auxiliary Contacts

Class	NO Contacts	NC Contacts	Modication Code	Controller Size — List Price $			
				00–1¾	2–4	5–6	7–8
14, 17, 18, 40, 83③, 84③	—	1	G01			—	—
	—	2	G02				—
	1	—	G10			—	—
	1	1	G11				
	1	2	G12			—	—
	2	—	G20				—
	2	1	G21			—	—
	2	2	G22				—
	2	3	G23			—	—
	3	1	G31				—
	3	2	G32			—	—
	3	3	G33		—	—	—
	4	—	G40				—
	4	1	G41			—	—
	4	2	G42		—	—	—
	4	4	G44		—	—	—
	5	—	G50			—	—
	5	1	G51		—	—	—
	5	3	G53		—	—	—
	6	—	G60		—	—	—
	6	2	G62		—	—	—
	7	1	G71		—	—	—
	8	—	G80		—	—	—
22, 25, 26, 43 & 30, 32 (2-winding)	—	2	G02①			—	—
	2	—	G20①			—	—
	2	2	G22①				—
	4	0	G40①				—
	4	4	G44①			—	—
	6	2	G62①			—	—
	8	0	G80①			—	—
30, 32 (1-winding)	0	2	G02①	—		—	—
	2	—	G20①	—		—	—
	2	2	G22①			—	—
	4	—	G40①			—	—
	4	4	G44①	—		—	—
	6	2	G62①	—		—	—
	8	—	G80①	—		—	—
LE, CLM, CM	1	1	G11		—	—	—
LC	0	1	G01				
	1	0	G10				
	1	1	G11				
	0	2	G02				
	2	0	G20				
LE, CLM, CM	0	2	G02①		—	—	—
	2	0	G20①		—	—	—
	2	2	G22①		—	—	—

Description	Class	Modification Code	Controller Size - Price Deduction $					
			0, 1	1¾ - 2½	3	3½, 4	5, 6	7, 8
Omit Overload Relay and Reset Button	17, 18, 25, 26	EX1						

① Auxiliary contacts will be added evenly across contactors. (i.e. Class 22, G02 suffix will add 2 NC contacts (one per contactor).

② Double the price addition for Class 30 and 32.
③ For class 83 and 84 contacts will be added to both starters. Price x 2.

Selection

Control Options

Description	Class	Enclosure Type	Modification Code	List Price $
Lighting Control Modules (does not include pilot devices)	CLM 20 Amp only	All	**2W (2-wire control module)** **3W (3-wire control module)** **3WS (Start/Stop control module)**	
Surge Suppression for 120V AC Coil②	14, 17, 18, 22, 25, 26, 30, 32, 36, 37, 83, 84, 87, 88	All	**SS**	
Disconnect Switch Interlock 2 NO/2 NC DPDT	17, 25, 32, 37, 84, CM, LE	1, 3, 4, 4X, 12	**GY**	
Motor Circuit Protector Interlock NO/NC SPDT	18, 26, 32, 37, 84, CM, LE	All	**GY**	
Lightning Arrestor	All	All	**L**	
Circuit Breaker Shunt Trip	18, 26, 32, 37, 84, 87, 88, CM, LE	All	**L6**	
Circuit Breaker Undervoltage Trip	18, 26, 32, 37, 84, 87, 88, CM, LE	All	**L7**	
Circuit Breaker Alarm Switch Trip	18, 26, 32, 37, 84, 87, 88, CM, LE	All	**L8**	
Ground Lug – 3 Conductor	All	All	**L10**	
Control Circuit Fuse and Holder (Transformer Primary Fusing)	All	All	**F1 (1 fuse)**	
			F2 (2 fuses)	
Control Circuit Circuit Breaker Internally Operated	All	All	**F4**	
Space Heater (120V separate control)	All	All	**SH**	
Space Heater with Thermostat (120V separate control)	All	All	**ST**	
Surge Capacitor	87, 88	All	**SC**	
Alarm Package (includes horn, light, relay & push-button)	83, 84, 87, 88	All	**M7**	
Backspin Protection	87, 88	All	**T5**	
Minimum Run Timer 0.2 sec. - 3 mins.	87, 88	All	**T6**	
Blown Control Fuse Indicator Light	17, 25, 32, 37, 84, 87, 88, CM, LC, LE	All	**L11**	
Single Phase 120VAC Combination Starter	17, 18, 25, 26	All	**SP1**	
Single Phase 240VAC Combination Starter	17, 18, 25, 26	All	**SP2**	

Reversing Options

Description	Class	Modification Code	Controller Size —List Price $								
			0	1	1¾	2	2½	3	3½	4	5
Reversing in one speed only 2 speed 1 winding	30, 32	**R6**									—
Reversing in one speed only 2 speed 2 winding		**R7**									—
Reversing in both speeds 2 speed 1 winding		**R8**									—
Reversing in both speeds 2 speed 2 winding		**R9**									—
Reversing for Reduced Voltage	36, 37	**R**									

Motor Management with PROFIBUS DP Communications③

Description	Class	Enclosure Type	Modification Code	List Price
SIMOCODE pro C With 0.3-3A Current Module	14,17,18,22,25,26	All	**MC1**	
SIMOCODE pro C With 2.4-25A Current Module			**MC2**	
SIMOCODE pro C With 10-100A Current Module			**MC3**	
SIMOCODE pro C With 20-200A Current Module			**MC4**	
SIMOCODE pro C With 63-630A Current Module			**MC5**	
SIMOCODE pro V With 0.3-3A Current/Voltage Module			**MV1**	
SIMOCODE pro V With 2.4-25A Current/Voltage Module			**MV2**	
SIMOCODE pro V With 10-100A Current/Voltage Module			**MV3**	
SIMOCODE pro V With 20-200A Current/Voltage Module			**MV4**	
SIMOCODE pro V With 63-630A Current/Voltage Module			**MV5**	
Factory Parameterization of SIMOCODE			**MM0**	

Electrically Held to Mechanically Held Conversion Modules	Class	Enclosure type	Contactor Size (Amp)	Description	Modification Code
	LC	**Open, 1, 12, 4/4X**	**30**	**2-wire, 24VAC** **2-wire, 110-120VAC** **2-wire, 200-277VAC** **3-wire, 24VAC** **3-wire, 110-120VAC** **3-wire, 200-277VAC**	**2W1** **2W2** **2W3** **3W1** **3W2** **3W3**

① Supplied as NEMA 12, field convertible to NEMA 3R.
② Surge Suppression for NEMA sizes 5 – 8 are supplied internal with the coil.
③ A CPT must also be ordered to power the motor management device. Motor management may be ordered with other product classes as specials.

Selection

Control Relays

Description		Class	Enclosure Type	Modification Code	List Price $
Control Relay 4-Poles Max	4 NO	All	1, 3, 4, 7, 9, 12	R40	
	2 NO/2 NC			R22	
	4 NC			R04	
Under/Over Voltage, Phase Failure, Phase Sequence, Phase Unbalance		All	All	R1	
Ground Fault Relay			All	R5	
Electronic On Delay Relay (.15s–100h) 24V/120V			1, 3, 4, 7, 9, 12	T1	
Electronic On Delay Relay (.15s–100h) 24V/240V①				T2	
Electronic Off Delay Relay (.15s–100s) 120V				T3	
Electronic Off Delay Relay (.15s–100s) 240V①				T4	
24 hour time clock		LC, LE, CLM, CM	All	T7	
24 hour time clock with day omission				T8	
7 day time clock				T9	
Compelling Relay		30, 32	1, 4, 12	A6	
Acceleration Control				A7	
Deceleration Control				A8	

Meters—Mounted on Enclosure

Description	Class	Enclosure Type	Modification Code	List② Price $
Ammeter (includes a C.T. if necessary)	14, 17, 18, 22, 25, 26, 30⑤, 32⑤, 36, 37, 40, 43, 83, 84, 87, 88	1, 3, 4, 4X, 12	M1	
Ammeter and Switch (3-Phase with 3 C.T.'s)		1, 12	M2	
Voltmeter		1, 3, 4, 4X, 12	M3	
Voltmeter and Switch (3-Phase)		1, 12	M4	
Elapsed Time Meter③		1, 3, 4, 4X, 12	M5	

Function Identification Plates

Description	Class	Modification Code	List Price $
Function identification plate, with marking as specified	All	N1	

Terminal Blocks

Description	Class	Modification Code	List Price $
3 Point Terminal	All	TC3④	
6 Point Terminal		TC6④	
9 Point Terminal		TC9④	

Special Ratings

Description	Class	Modification Code	List Price $
Service Entrance Rating	17, 18, 25, 26, 32, 37, 84	N3	

Drawings

Description	Class	Catalog Number	List Price $
Approval/submittal and as-built drawings for factory modified product may be ordered. The drawing set includes an enclosure outline, a panel layout and a schematic. When entering the order, use the line item notes to reference a product and modifications or an existing order that the drawings are to be engineered for. Specify the contact information and an email address in the ship to address field. Attach any reference drawings to the order or forward to National Customer Support. Once completed, the drawing set will emailed.	All	CONTROLDRAWING	

① Not available on Class 36, 37.
② Price x 2 Class 83 and 84.
③ ETM available with 120V coil only.
④ For terminal point more than 9 terminals use additional suffixes. Max 3 suffixes can be selected.
⑤ Class 30 and 32 can be modified with only an elapsed time meter. No other meters apply to class 30 or 32.

Selection of Heater Elements for Overload Relays

General

Use only when motor full load current is not known. Motor amps will vary depending on the type and manufacturer of the motor. These average values, for motors with service factor of 1.15, are to be used only as a guide. The formulas at the bottom of the page may be used to obtain approximate amps for other motors.
Note: RPM shown for 60 cycle motors. For 50 cycle motors, multiply RPM by .83.

CAUTION: Actual motor amps may be higher or lower than the values listed below for a particular motor. For more reliable motor protection, select heater elements by using the full load motor nameplate amps.

Single Phase motor full load amps of the same horsepower, voltage and speed vary over wide ranges. The following table conforms with table 430.148 of the NEC.

1-Phase

Hp	Full Load Current (60Hz) 115 Volts	230 Volts
⅛	4.4	2.2
¼	5.8	2.9
⅓	7.2	3.6
½	9.8	4.9
¾	13.8	6.9
1	16	8
1 ½	20	10
2	24	12
3	34	17
5	56	28
7 ½	80	40
10	100	50

3-Phase

Hp	Syn Speed RPM	Full Load Current (60Hz) 200 Volts	230 Volts	460 Volts	575 Volts	50 Hz 380 Volts
¼	1800	1.09	0.95	0.48	0.38	0.55
	1200	1.61	1.40	0.70	0.56	0.81
	900	1.84	1.60	0.80	0.64	0.93
⅓	1800	1.37	1.19	0.60	0.48	0.64
	1200	1.83	1.59	0.80	0.64	0.92
	900	2.07	1.80	0.90	0.72	1.04
½	1800	1.98	1.72	0.86	0.69	0.99
	1200	2.47	2.15	1.08	0.86	1.24
	900	2.74	2.38	1.19	0.95	1.38
¾	1800	2.83	2.46	1.23	0.98	1.42
	1200	3.36	2.82	1.46	1.17	—
	900	3.75	3.26	1.63	1.30	1.88
1	3600	3.22	2.80	1.40	1.12	1.70
	1800	4.09	3.56	1.78	1.42	2.06
	1200	4.32	3.76	1.88	1.50	2.28
	900	4.95	4.30	2.15	1.72	2.60
1½	3600	5.01	4.36	2.18	1.74	2.69
	1800	5.59	4.86	2.43	1.94	2.94
	1200	6.07	5.28	2.64	2.11	3.20
	900	6.44	5.60	2.80	2.24	3.39
2	3600	6.44	5.60	2.80	2.24	3.39
	1800	7.36	6.40	3.20	2.56	3.84
	1200	7.87	6.84	3.42	2.74	4.14
	900	9.09	7.90	3.95	3.16	4.77
3	3600	9.59	8.34	4.17	3.34	5.02
	1800	10.8	9.40	4.70	3.76	5.70
	1200	11.7	10.2	5.12	4.10	6.20
	900	13.1	11.4	5.70	4.55	6.80
5	3600	15.5	13.5	5.76	5.41	8.20
	1800	16.6	14.4	7.21	5.78	8.74
	1200	18.2	15.8	7.91	6.32	9.59
	900	18.3	15.9	7.92	6.33	9.60
7½	3600	22.4	19.5	9.79	7.81	11.50
	1800	24.7	21.5	10.7	8.55	13.00
	1200	25.1	21.8	10.9	8.70	13.20
	900	26.5	23.0	11.5	9.19	13.90
10	3600	29.2	25.4	12.7	10.1	15.40
	1800	30.8	25.8	13.4	10.7	16.30
	1200	32.2	28.0	14.0	11.2	16.90
	900	35.1	30.5	15.2	12.2	18.50
15	3600	41.9	36.4	18.2	14.5	22.00
	1800	45.1	39.2	19.6	15.7	23.70
	1200	47.6	41.4	20.7	16.5	25.00
	900	51.2	44.5	22.2	17.8	26.90
20	3600	58.0	50.4	25.2	20.1	30.50
	1800	58.9	51.2	25.6	20.5	31.00
	1200	60.7	52.8	26.4	21.1	31.90
	900	63.1	54.9	27.4	21.9	33.20

3-Phase

Hp	Syn Speed RPM	Full Load Current (60Hz) 200 Volts	230 Volts	460 Volts	575 Volts	50 Hz 380 Volts
25	3600	69.9	60.8	30.4	24.3	36.80
	1800	74.5	64.8	32.4	25.9	39.20
	1200	75.4	65.6	32.8	26.2	39.60
	900	77.4	67.3	33.7	27.0	40.70
30	3600	84.8	73.7	36.8	29.4	—
	1800	86.9	75.6	37.8	30.2	45.70
	1200	90.6	78.8	39.4	31.5	47.60
	900	94.1	81.8	40.9	32.7	49.50
40	3600	111	96.4	48.2	38.5	—
	1800	116	101	50.4	40.3	61.00
	1200	117	102	50.6	40.4	61.20
	900	121	105	52.2	41.7	63.20
50	3600	138	120	60.1	48.2	—
	1800	143	124	62.2	49.7	75.20
	1200	145	126	63.0	50.4	76.20
	900	150	130	65.0	52.0	78.50
60	3600	164	143	71.7	57.3	—
	1800	171	149	74.5	59.4	90.00
	1200	173	150	75.0	60.0	91.10
	900	177	154	77.0	61.5	93.10
75	3600	206	179	89.6	71.7	—
	1800	210	183	91.6	73.2	111.00
	1200	212	184	92.0	73.5	112.00
	900	222	193	96.5	77.5	117.00
100	3600	266	231	115	92.2	—
	1800	271	236	118	94.8	144.00
	1200	275	239	120	95.6	145.00
	900	290	252	126	101	153.00
125	3600	—	292	146	116	—
	1800	—	293	147	117	177.00
	1200	—	298	149	119	180.00
	900	—	305	153	122	186.00
150	3600	—	343	171	137	—
	1800	—	348	174	139	210.00
	1200	—	350	174	139	210.00
	900	—	365	183	146	211.00
200	3600	—	458	229	184	—
	1800	—	452	226	181	274.00
	1200	—	460	230	184	276.00
	900	—	482	241	193	279.00
250	3600	—	559	279	223	—
	1800	—	568	284	227	343.00
	1200	—	573	287	229	345.00
	900	—	600	300	240	347.00
300	1800	—	278	339	271	392.00
	1200	—	684	342	274	395.00
400	1800	—	896	448	358	—

Formula—Approximate Full Load Amps for Other Motors

208 Volt Full Load Amp ≈ 230 Volt current × 110%
2-Phase FLA ≈ 0.866 × the 3-Phase FLA
2-Phase, 3-wire current in common wire ≈ 1.41 × that in the other 2 lines

25Hz 1500 RPM, amps ≈ amps of 60Hz, 3600 RPM
25Hz 750 RPM, amps ≈ amps of 60Hz, 1800 RPM
Service factor 1.0 ≈ amps × 0.9
50°C–55°C motor ≈ amps × 0.9

Selection of Heater Elements for Overload Relays

General

To Select Heater Catalog Number Use

- Product Class
- Controller Size
- Motor Amp
- Phase

Catalog No 14 C P 3 2 B C 81

- Phase
- Size
- Class

1. Find heater table number below, using the Product Class, Controller Size and Phase. Heater table number is found in the column under the type of overload and phase.

2. Refer to the specified table and use the controller size and motor amps to select the heater catalog number.

a. If motor amps are not known, an approximate value may be found on the previous page. These values should be used with caution and only when motor amps are not available.

Heaters shown on the following pages provide a maximum trip rating of 125% of minimum motor amperes for 40˚C motors (service factor 1.15). For other motors (service factor 1.0), select the next lower listed heater catalog number within the designated table which provides a maximum trip rating of approximately 115%.

Overload relays do not provide protection against short circuits. To ensure proper coordination with short circuit protective device, select heaters from the information packaged with the control device.

Class	Description	Size or Amperage	Controller Size Letter	Heater Table Number			
				Bimetal Standard Trip (Class 20)		Bimetal Quick Trip (Class 10)	
				Compensated E Heaters Green Reset		Compensated K Heaters Green Reset	
				1Ph	3Ph	1Ph	3Ph
SMF	Manual	All	—	See Page 9/126			
	Magnetic						
14, 22	Non-reversing, Reversing	00-4	**B–J**	213	233	313	332
17, 18 25, 26 30, 32① 83, 84 87, 89	Combination Reversing Combination Multi Speed Pump Controllers Motor Control Centers	0-4	**C-J**	—	233	—	332
48	Panel Mounted Overload Relay	25-180A	**D–J**	216	238	316	335

ESP200 starters do not require heater elements.

① **Overload Relay Selection Multi-Speed**
Each speed requires a separate set of overloads. The adjustment range must be selected on the basis of the full-load current for each particular speed.

Heater Elements, Class SMF

General

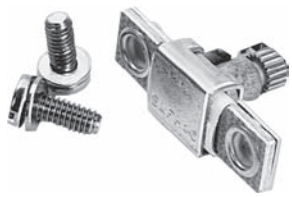

Heater Elements Class SMF

Ordering Information

1. Determine number of heater elements required from Table A.
2. Determine motor full load current and service factor.
   NOTE: If motor amps are unknown, an approximate value may be found on page 9/124. These values should be used with caution and only when motor amps are not available.
3. If the motor and controller are in the same ambient temperature:
   a. For 1.15 to 1.25 service factor motors use 100% of motor full load current for heater element selection.
   b. For 1.0 service factor motors use 90% of motor full load current for heater element selection.
   c. Heater elements are class 20.
4. If the motor and controller are in different ambient temperatures multiply motor full load current by the multiplier in Table B. Use the resultant full load current for heater element selection.
5. Select proper heater element from table below.
6. All tables are based on the operation of the motor and controller in the same ambient temperature, 40°C (104°F) or less. Always be certain the correct heater element is installed in the starter before operating the motor.

Heater Catalog Number	Motor Full-Load Current (Amps)	List Price $
SMFH01	0.157–0.173	
SMFH02	0.174–0.192	
SMFH03	0.193–0.212	
SMFH04	0.213–0.235	
SMFH05	0.236–0.261	
SMFH06	0.262–0.289	
SMFH07	0.290–0.321	
SMFH08	0.322–0.355	
SMFH09	0.356–0.399	
SMFH10	0.41–0.44	
SMFH11	0.45–0.49	
SMFH12	0.50–0.53	
SMFH13	0.54–0.58	
SMFH14	0.59–0.65	
SMFH15	0.66–0.71	
SMFH16	0.72–0.78	
SMFH17	0.79–0.85	
SMFH18	0.86–0.96	
SMFH19	0.97–1.04	
SMFH20	1.05–1.16	
SMFH21	1.17–1.25	
SMFH22	1.30–1.39	
SMFH23	1.38–1.54	
SMFH24	1.48–1.63	
SMFH25	1.57–1.75	
SMFH26	1.66–1.86	

Heater Catalog Number	Motor Full-Load Current (Amps)	List Price $
SMFH27	1.80–1.99	
SMFH28	1.96–2.15	
SMFH29	2.16–2.38	
SMFH30	2.39–2.75	
SMFH31	2.76–2.84	
SMFH32	2.85–3.06	
SMFH33	3.07–3.45	
SMFH34	3.46–3.70	
SMFH35	3.71–4.07	
SMFH36	4.08–4.32	
SMFH37	4.33–4.90	
SMFH38	4.91–5.35	
SMFH39	5.36–5.85	
SMFH40	5.86–6.41	
SMFH41	6.42–6.79	
SMFH42	6.80–7.57	
SMFH43	7.58–8.15	
SMFH44	8.16–8.98	
SMFH45	8.99–9.67	
SMFH46	9.68–9.95	
SMFH47	9.96–10.8	
SMFH48	10.9–12.1	
SMFH49	12.2–13.1	
SMFH50	13.2–13.9	
SMFH51	14.0–15.0	
SMFH52	15.1–16.0	

Table A
Number of Heater Elements

Device	Number of Heater Elements	Notes
SMFF*1 SMFF*2 SMFF*3 SMFF*4 SMFF*5 SMFF*6	1	All single pole and two pole SMF starters require only 1 Heater Element.
SMFF*22 SMFF*44	2	Duplex Unit. One Heater Element per starter.
SMFF*11 SMFF*22	2	Two Speed Starter. One Heater Element per speed.

Table B—Special Applications
Heater Element Selection

Continuous Duty Motor Service Factor	Ambient Temperature of Motor		
	Same as Controller Ambient	Constant 10°C (18°F) Higher Than Controller Ambient	Constant 10°C (18°F) Lower Than Controller Ambient
	Full Load Current Multiplier		
1.15 to 1.25	1.0	0.9	1.05
1.0	0.9	0.8	0.95

Full Load Motor Amps, Single Phase, Trip Class 20 – Tables 213, 216

Selection

Table 213 for Class 14, 22 (1-Phase)

Full Load Amps			Heater Catalog No	List Price $
Size 00, 0, 1	Size 1P	Size 2, 2½		
0.37–0.40	—	—	**E3**	
0.41–0.44	0.41–0.44	—	**E4**	
0.45–0.47	0.45–0.47	—	**E5**	
0.48–0.52	0.48–0.52	—	**E6**	
0.53–0.57	0.53–0.57	—	**E7**	
0.58–0.62	0.58–0.62	—	**E8**	
0.63–0.69	0.63–0.69	—	**E9**	
0.70–0.74	0.70–0.74	—	**E11**	
0.75–0.81	0.75–0.81	—	**E12**	
0.82–0.85	0.82–0.85	—	**E13**	
0.86–0.93	0.86–0.93	—	**E14**	
0.94–1.03	0.94–1.03	—	**E16**	
1.04–1.11	1.04–1.11	—	**E17**	
1.12–1.22	1.12–1.22	—	**E18**	
1.23–1.34	1.23–1.34	—	**E23**	
1.35–1.53	1.35–1.53	—	**E24**	
1.54–1.71	1.54–1.71	—	**E26**	
1.72–1.92	1.72–1.92	—	**E27**	
1.93–2.12	1.93–2.12	—	**E28**	
2.13–2.24	2.13–2.24	—	**E29**	
2.25–2.43	2.25–2.43	—	**E31**	
2.44–2.57	2.44–2.57	—	**E32**	
2.58–2.86	2.58–2.86	—	**E33**	
2.87–3.16	2.87–3.16	—	**E34**	
3.17–3.35	3.17–3.35	—	**E36**	
3.36–3.58	3.36–3.58	—	**E37**	
3.59–3.90	3.59–3.90	—	**E38**	
3.91–4.25	3.91–4.25	—	**E39**	
4.26–4.77	4.26–4.77	—	**E41**	
4.78–5.35	4.78–5.35	—	**E42**	
5.36–5.76	5.36–5.76	—	**E44**	
5.77–6.33	5.77–6.33	—	**E46**	
6.34–6.98	6.34–6.98	—	**E47**	
6.99–7.37	6.99–7.37	—	**E48**	
7.38–7.71	7.38–7.71	—	**E49**	
7.72–8.51	7.72–8.51	—	**E50**	
8.52–9.31	8.52–9.31	—	**E51**	
9.32–10.1	9.32–10.1	—	**E52**	
10.2–10.9	10.2–10.9	—	**E53**	
11.0–12.2	11.0–12.2	—	**E54**	
12.3–13.5	12.3–13.5	—	**E55**	
13.6–15.7	13.6–15.7	—	**E56**	
15.8–17.3	15.8–17.3	19.4–22.0	**E57**	
17.4–19.9	17.4–19.9	22.1–23.5	**E60**	
20.0–21.7	20.0–21.7	23.6–25.0	**E61**	
21.8–23.4	21.8–23.4	25.1–27.0	**E62**	
23.5–24.0	23.5–23.7	27.1–28.9	**E65**	
—	23.8–25.1	29.0–31.0	**E66**	
—	25.2–27.9	31.1–34.8	**E67**	
—	28.0–32.2	34.9–36.9	**E69**	
—	32.3–34.0	37.0–43.9	**E70**	
—	—	44.0–46.0	**E72**	
—	—	46.1–48.3	**E73**	
—	—	48.4–55.0	**E74**	
—	—	55.1–60.0	**E76**	

Table 216 for Class 48

Full Load Amps			Heater Catalog No	List Price $
48DA, 48GA	48HA	48JA		
0.34–0.36	—	—	**E3**	
0.37–0.40	—	—	**E4**	
0.41–0.43	—	—	**E5**	
0.44–0.47	—	—	**E6**	
0.48–0.51	—	—	**E7**	
0.52–0.56	—	—	**E8**	
0.57–0.62	—	—	**E9**	
0.63–0.67	—	—	**E11**	
0.68–0.73	—	—	**E12**	
0.74–0.77	—	—	**E13**	
0.78–0.84	—	—	**E14**	
0.85–0.93	—	—	**E16**	
0.94–1.00	—	—	**E17**	
1.01–1.10	—	—	**E18**	
—	—	—	**E19**	
1.11–1.21	—	—	**E23**	
1.22–1.38	—	—	**E24**	
1.39–1.54	—	—	**E26**	
1.55–1.73	—	—	**E27**	
1.74–1.91	—	—	**E28**	
1.92–2.02	—	—	**E29**	
2.03–2.19	—	—	**E31**	
2.20–2.32	—	—	**E32**	
2.33–2.58	—	—	**E33**	
2.59–2.85	—	—	**E34**	
2.86–3.02	—	—	**E36**	
3.03–3.23	—	—	**E37**	
3.24–3.52	—	—	**E38**	
3.53–3.83	—	—	**E39**	
3.84–4.30	—	—	**E41**	
4.31–4.82	—	—	**E42**	
4.83–5.19	—	—	**E44**	
5.20–5.71	—	—	**E46**	
5.72–6.29	—	—	**E47**	
6.30–6.64	—	—	**E48**	
6.65–6.95	—	—	**E49**	
6.96–7.67	—	—	**E50**	
7.68–8.39	—	—	**E51**	
8.40–9.19	—	—	**E52**	
9.20–9.94	—	—	**E53**	
9.95–10.9	—	—	**E54**	
11.0–12.2	—	—	**E55**	
12.3–14.2	—	—	**E56**	
14.3–15.6	—	—	**E57**	
—	—	—	**E59**	
15.7–17.9	—	—	**E60**	
18.0–19.6	—	—	**E61**	
19.7–22.3	—	—	**E62**	
22.4–24.0	—	—	**E65**	
24.1–25.9	—	—	**E66**	
26.0–29.5	27.1–30.0	—	**E67**	
29.6–32.5	30.1–33.2	—	**E69**	
32.6–33.5	33.3–35.7	—	**E70**	
33.6–36.9	35.8–39.4	—	**E71**	
37.0–39.2	39.5–43.4	—	**E72**	
39.3–43.1	43.5–46.9	—	**E73**	
43.2–47.4	47.0–51.5	—	**E74**	
47.5–50.0	51.6–57.0	—	**E76**	
50.1–55.2	57.1–62.8	—	**E77**	
55.3–60.0	62.9–69.1	—	**E78**	
—	69.2–75.0	—	**E79**	
—	75.1–83.3	—	**E80**	
—	—	50.0–55.9	**E88**	
—	—	56.0–60.9	**E89**	
—	—	61.0–65.9	**E91**	
—	—	66.0–69.9	**E92**	
—	—	70.0–75.9	**E93**	
—	—	76.0–81.9	**E94**	
—	83.4–86.9	82.0–86.9	**E96**	
—	87.0–92.9	87.0–92.9	**E97**	
—	93.0–100.0	93.0–97.9	**E98**	
—	—	98.0–107.9	**E99**	
—	—	108.0–113.9	**E101**	
—	—	114.0–125.0	**E102**	
—	—	126.0–138.0	**E103**	
—	—	139.0–153.0	**E104**	
—	—	154.0–163.0	**E106**	
—	—	164.0–180.0	**E107**	

Full Load Motor Amps, 3-Phase, Trip Class 20 – Tables 233, 238

Selection

Table 233 for Class 14, 17, 18, 22, 25, 26, 30, 32, 83, 84, 87 (3-Phase)

Full Load Amps					Heater Catalog No	List Price $
Size 00, 0, 1	Size 1¾	Size 2, 2½	Size 3, 3½	Size 4		
0.38–0.40	—	—	—	—	**E6**	
0.41–0.43	—	—	—	—	**E7**	
0.44–0.48	—	—	—	—	**E8**	
0.49–0.53	—	—	—	—	**E9**	
0.54–0.57	—	—	—	—	**E11**	
0.58–0.62	—	—	—	—	**E12**	
0.63–0.66	—	—	—	—	**E13**	
0.67–0.72	—	—	—	—	**E14**	
0.73–0.80	—	—	—	—	**E16**	
0.81–0.85	—	—	—	—	**E17**	
0.86–0.92	—	—	—	—	**E18**	
0.93–0.99	—	—	—	—	**E19**	
1.00–1.08	—	—	—	—	**E23**	
1.09–1.23	—	—	—	—	**E24**	
1.24–1.37	—	—	—	—	**E26**	
1.38–1.54	—	—	—	—	**E27**	
1.55–1.69	—	—	—	—	**E28**	
1.70–1.80	—	—	—	—	**E29**	
1.81–1.94	—	—	—	—	**E31**	
1.95–2.07	—	—	—	—	**E32**	
2.08–2.26	—	—	—	—	**E33**	
2.27–2.54	2.27–2.54	—	—	—	**E34**	
2.55–2.69	2.55–2.69	—	—	—	**E36**	
2.70–2.88	2.70–2.88	—	—	—	**E37**	
2.89–3.14	2.89–3.14	—	—	—	**E38**	
3.15–3.40	3.15–3.40	—	—	—	**E39**	
3.41–3.81	3.41–3.81	—	—	—	**E41**	
3.82–4.26	3.82–4.25	—	—	—	**E42**	
4.27–4.62	4.26–4.62	—	—	—	**E44**	
4.63–5.09	4.63–5.09	—	—	—	**E46**	
5.10–5.61	5.10–5.61	—	—	—	**E47**	
5.62–5.91	5.62–5.91	—	—	—	**E48**	
5.92–6.15	5.92–6.15	—	—	—	**E49**	
6.16–6.70	6.16–6.70	—	—	—	**E50**	
6.71–7.54	6.71–7.54	—	—	—	**E51**	
7.55–8.29	7.55–8.29	—	—	—	**E52**	
8.30–8.99	8.30–8.99	—	—	—	**E53**	
9.00–9.85	9.00–9.85	—	—	—	**E54**	
9.86–10.4	9.86–10.4	—	—	—	**E55**	
10.5–12.0	10.5–12.0	10.5–12.0	—	—	**E56**	
12.1–13.6	12.1–13.6	12.1–13.6	—	—	**E57**	
13.7–15.6	13.7–15.6	13.7–15.6	—	—	**E60**	
15.7–17.0	15.7–17.0	15.7–17.1	—	—	**E61**	
17.1–18.4	17.1–19.4	17.2–19.4	—	—	**E62**	
18.5–19.4	19.5–20.9	19.5–20.9	—	—	**E65**	
19.5–21.3	21.0–22.2	21.0–22.2	—	—	**E66**	
21.4–24.4	22.3–25.3	22.3–25.3	—	—	**E67**	
24.5–25.9	25.4–26.9	25.4–26.9	30.0–33.5	—	**E69**	
26.0–27.0	27.0–30.2	27.0–30.2	33.6–36.4	—	**E70**	
—	—	—	36.5–39.6	—	**E71**	
—	30.3–33.3	30.3–33.3	—	—	**E72**	
—	33.4–36.0	33.4–35.3	39.7–43.6	—	**E73**	
—	—	—	43.7–46.5	—	**E73A**	
—	—	35.4–41.5	46.6–51.6	—	**E74**	
—	—	41.6–45.0	51.7–54.4	—	**E76**	
—	—	45.1–52.3	54.5–58.0	—	**E77**	
—	—	52.4–55.7	58.1–63.0	—	**E78**	
—	—	55.8–60.0	63.1–67.7	—	**E79**	
—	—	—	67.8–72.4	—	**E80**	
—	—	—	—	—	**E88**	
—	—	—	—	56.9–60.9	**E89**	
—	—	—	—	61.0–63.9	**E91**	
—	—	—	—	64.0–67.7	**E92**	
—	—	—	—	67.8–72.4	**E93**	
—	—	—	72.5–80.0	72.5–77.7	**E94**	
—	—	—	80.1–88.1	77.8–85.9	**E96**	
—	—	—	88.2–91.5	86.0–91.9	**E97**	
—	—	—	91.6–96.8	92.0–96.7	**E98**	
—	—	—	96.9–99.0	96.8–105	**E99**	
—	—	—	99.1–108.0	—	**E101**	
—	—	—	—	—	**E102**	
—	—	—	—	106–115	**E103**	
—	—	—	—	116–130	**E104**	

Table 238 for Class 48

Full Load Amps				Heater Catalog No	List Price $
48DC	48GC	48HA	48JA		
0.30–0.32	—	—	—	**E3**	
0.33–0.35	—	—	—	**E4**	
0.36–0.38	—	—	—	**E5**	
0.39–0.41	—	—	—	**E6**	
0.42–0.44	—	—	—	**E7**	
0.45–0.49	—	—	—	**E8**	
0.50–0.54	—	—	—	**E9**	
0.55–0.58	—	—	—	**E11**	
0.59–0.63	—	—	—	**E12**	
0.64–0.67	—	—	—	**E13**	
0.68–0.73	—	—	—	**E14**	
0.74–0.81	—	—	—	**E16**	
0.82–0.87	—	—	—	**E17**	
0.88–0.94	—	—	—	**E18**	
0.95–1.00	—	—	—	**E19**	
1.01–1.10	—	—	—	**E23**	
1.11–1.26	—	—	—	**E24**	
1.27–1.40	—	—	—	**E26**	
1.41–1.58	—	—	—	**E27**	
1.59–1.74	—	—	—	**E28**	
1.75–1.85	—	—	—	**E29**	
1.86–1.99	—	—	—	**E31**	
2.00–2.11	—	—	—	**E32**	
2.12–2.31	—	—	—	**E33**	
2.32–2.59	—	—	—	**E34**	
2.60–2.75	—	—	—	**E36**	
2.76–2.95	—	—	—	**E37**	
2.96–3.21	—	—	—	**E38**	
3.22–3.48	—	—	—	**E39**	
3.49–3.89	—	—	—	**E41**	
3.90–4.35	—	—	—	**E42**	
4.36–4.73	—	—	—	**E44**	
4.74–5.21	—	—	—	**E46**	
5.22–5.74	—	—	—	**E47**	
5.75–6.05	—	—	—	**E48**	
6.06–6.46	—	—	—	**E49**	
6.47–6.95	—	—	—	**E50**	
6.96–8.09	—	—	—	**E51**	
8.10–9.29	—	—	—	**E52**	
9.30–10.4	—	—	—	**E53**	
—	—	—	—	**E54**	
10.5–10.9	—	—	—	**E55**	
11.0–12.0	—	—	—	**E56**	
12.1–14.5	—	—	—	**E57**	
14.6–16.8	—	—	—	**E60**	
16.9–18.4	16.9–18.4	—	—	**E61**	
18.5–20.9	18.5–20.9	—	—	**E62**	
21.0–22.5	21.0–22.5	—	—	**E65**	
22.6–24.3	22.6–24.7	—	—	**E66**	
24.4–27.2	24.8–27.2	27.1–30.0	—	**E67**	
27.3–29.2	27.3–29.2	30.1–33.2	—	**E69**	
29.3–30.0	29.3–32.0	33.3–35.7	—	**E70**	
—	32.1–34.9	35.8–39.4	—	**E71**	
—	—	39.5–43.4	—	**E72**	
—	35.0–37.8	43.5–46.9	—	**E73**	
—	37.9–41.7	—	—	**E73A**	
—	41.8–45.9	47.0–51.5	—	**E74**	
—	46.0–49.0	51.6–57.0	—	**E76**	
—	49.1–54.2	57.1–62.8	—	**E77**	
—	54.3–60.0	62.9–69.1	—	**E78**	
—	—	69.2–75.0	—	**E79**	
—	—	75.1–83.3	—	**E80**	
—	—	—	50.0–55.9	**E88**	
—	—	—	56.0–60.9	**E89**	
—	—	—	61.0–65.9	**E91**	
—	—	—	66.0–69.9	**E92**	
—	—	—	70.0–75.9	**E93**	
—	—	—	76.0–81.9	**E94**	
—	—	83.4–86.9	82.0–86.9	**E96**	
—	—	87.0–92.9	87.0–92.9	**E97**	
—	—	93.0–100.0	93.0–97.9	**E98**	
—	—	—	98.0–107.9	**E99**	
—	—	—	108–113.9	**E101**	
—	—	—	114–125.9	**E102**	
—	—	—	126–138.9	**E103**	
—	—	—	139–153.9	**E104**	
—	—	—	154–163.9	**E106**	
—	—	—	164–180.9	**E107**	

Full Load Motor Amps, Single Phase, Trip Class 10 – Tables 313, 316

Selection

Table 313 for Class 14, 22 (1-Phase)

Full Load Amps			Heater	
Size 00, 0, 1	Size 1P	Size 2, 2½	Catalog No	List Price $
1.85–2.05	1.85–2.05	—	**K21**	
2.06–2.35	2.06–2.35	—	**K22**	
2.36–2.64	2.36–2.64	—	**K24**	
2.65–2.96	2.65–2.96	—	**K27**	
2.97–3.31	2.97–3.31	—	**K28**	
3.32–3.51	3.32–3.51	—	**K29**	
3.52–3.87	3.52–3.87	—	**K31**	
3.88–4.31	3.88–4.31	—	**K32**	
4.32–4.79	4.32–4.79	—	**K33**	
4.80–5.21	4.80–5.21	—	**K34**	
5.22–5.75	5.22–5.75	—	**K36**	
5.76–6.11	5.76–6.11	—	**K37**	
6.12–6.95	6.12–6.95	—	**K39**	
6.96–7.73	6.96–7.73	—	**K41**	
7.74–8.47	7.74–8.47	—	**K42**	
8.48–9.52	8.48–9.52	—	**K43**	
9.53–10.4	9.53–10.4	—	**K49**	
10.5–11.1	10.5–11.1	—	**K50**	
11.2–12.4	11.2–12.4	—	**K52**	
12.5–13.5	12.5–13.5	—	**K53**	
13.6–15.1	13.6–15.1	—	**K54**	
15.2–16.6	15.2–16.6	—	**K55**	
16.7–17.6	16.7–17.6	—	**K57**	
17.7–18.8	17.7–18.8	18.7–19.7	**K58**	
18.9–21.6	18.9–21.6	19.8–21.3	**K60**	
21.7–22.7	21.7–22.7	21.4–22.8	**K61**	
22.8–25.3	22.8–25.3	22.9–24.2	**K62**	
—	25.4–26.6	24.3–26.5	**K63**	
—	26.7–30.1	26.6–29.3	**K64**	
—	30.2–33.0	29.4–32.0	**K67**	
—	33.1–34.1	32.1–35.6	**K68**	
—	—	35.7–37.9	**K69**	
—	—	38.0–40.3	**K70**	
—	—	40.4–44.3	**K72**	
—	—	44.4–49.5	**K73**	
—	—	49.6–52.1	**K74**	
—	—	52.2–53.7	**K75**	
—	—	53.8–60.0	**K76**	

Table 316 for Class 48

Full Load Amps				Heater	
48DA	48GA	48HA	48JA	Catalog No	List Price $
1.69–1.88	—	—	—	**K21**	
1.89–2.05	—	—	—	**K22**	
2.06–2.21	—	—	—	**K23**	
2.22–2.44	—	—	—	**K24**	
2.45–2.70	—	—	—	**K26**	
2.71–2.92	—	—	—	**K27**	
2.93–3.27	—	—	—	**K28**	
3.28–3.56	—	—	—	**K29**	
3.57–3.83	—	—	—	**K31**	
3.84–4.23	—	—	—	**K32**	
4.24–4.57	—	—	—	**K33**	
4.58–4.97	—	—	—	**K34**	
4.98–5.67	—	—	—	**K36**	
5.68–6.11	—	—	—	**K37**	
6.12–6.91	—	—	—	**K39**	
6.92–7.65	—	—	—	**K41**	
7.66–8.4	—	—	—	**K42**	
8.5–8.9	—	—	—	**K43**	
9.0–10.1	9.12–9.6	—	—	**K49**	
10.2–11.2	9.7–10.4	—	—	**K50**	
11.3–12.3	10.5–11.4	—	—	**K52**	
12.4–13.3	11.5–12.1	—	—	**K53**	
13.4–14.1	12.2–12.9	—	—	**K54**	
14.2–15.0	13.0–13.7	—	—	**K55**	
15.1–16.2	13.8–14.8	—	—	**K56**	
16.3–17.5	14.9–16.4	—	—	**K57**	
17.6–18.6	16.5–18.2	—	—	**K58**	
18.7–19.9	18.3–19.5	—	—	**K60**	
20.0–21.3	19.6–20.9	—	—	**K61**	
21.4–22.8	21.0–22.8	23.2–25.1	—	**K62**	
22.9–25.1	22.9–24.7	25.2–27.3	—	**K63**	
25.2–27.6	24.8–27.6	27.4–30.4	—	**K64**	
27.7–30.0	27.7–30.5	30.5–33.3	—	**K67**	
—	30.6–33.9	33.4–36.5	—	**K68**	
—	34.0–37.3	36.6–39.3	—	**K69**	
—	37.4–40.2	39.4–43.5	—	**K70**	
—	40.3–41.9	43.6–46.6	43.0–46.5	**K72**	
—	42.0–45.9	46.7–51.1	46.6–50.9	**K73**	
—	46.0–50.9	51.2–56.3	51.0–55.9	**K74**	
—	51.0–52.9	56.4–61.1	56.0–59.1	**K75**	
—	53.0–57.7	61.2–64.9	59.2–68.7	**K76**	
—	57.8–60.0	65.0–71.9	—	**K77**	
—	—	72.0–80.7	68.8–80.7	**K78**	
—	—	80.8–92.7	80.8–92.7	**K85**	
—	—	92.8–100.0	92.8–103.9	**K86**	
—	—	—	104.0–113.5	**K87**	
—	—	—	113.6–127.9	**K89**	
—	—	—	128.0–143.9	**K92**	
—	—	—	144.0–163.9	**K94**	
—	—	—	164.0–180.0	**K96**	

Full Load Motor Amps, 3-Phase, Trip Class 10 – Tables 332, 335

Selection

Table 332 for Class 14, 17, 18, 22, 25, 26, 30, 32, 83, 84, 87 (3-Phase)

Full Load Amps					Heater Catalog No	List Price $
Size 00, 0, 1	Size 1¾	Size 2, 2½	Size 3, 3½	Size 4		
1.52–1.65	1.52–1.65	—	—	—	**K21**	
1.66–1.79	1.66–1.79	—	—	—	**K22**	
1.80–1.94	1.80–1.94	—	—	—	**K23**	
1.95–2.15	1.95–2.15	—	—	—	**K24**	
2.16–2.37	2.16–2.37	—	—	—	**K26**	
2.38–2.56	2.38–2.56	—	—	—	**K27**	
2.57–2.87	2.57–2.87	—	—	—	**K28**	
2.88–3.13	2.88–3.13	—	—	—	**K29**	
3.14–3.37	3.14–3.37	—	—	—	**K31**	
3.38–3.72	3.38–3.72	—	—	—	**K32**	
3.73–4.00	3.73–4.00	—	—	—	**K33**	
4.01–4.35	4.01–4.35	—	—	—	**K34**	
4.36–4.99	4.36–4.99	—	—	—	**K36**	
5.00–5.38	5.00–5.38	—	—	—	**K37**	
5.39–5.79	5.39–5.79	—	—	—	**K39**	
5.80–6.43	5.80–6.43	—	—	—	**K41**	
6.44–6.83	6.44–6.83	—	—	—	**K42**	
6.84–7.83	6.84–7.83	—	—	—	**K43**	
7.84–8.23	7.84–8.23	—	—	—	**K49**	
8.24–9.59	8.24–9.59	—	—	—	**K50**	
9.60–9.90	9.60–9.90	—	—	—	**K52**	
10.0–10.7	10.0–10.7	—	—	—	**K53**	
10.8–11.6	10.8–11.6	12.1–12.7	—	—	**K54**	
11.7–12.3	11.7–12.3	12.8–13.5	—	—	**K55**	
12.4–13.4	12.4–13.4	13.6–14.6	—	—	**K56**	
13.5–14.2	13.5–14.2	14.7–15.9	—	—	**K57**	
14.3–15.1	14.3–15.1	16.0–16.9	—	—	**K58**	
15.2–17.5	15.2–17.5	17.0–18.2	—	—	**K60**	
17.6–18.7	17.6–18.7	18.3–19.5	—	—	**K61**	
18.8–20.0	18.8–20.0	19.6–20.9	—	—	**K62**	
20.1–21.5	20.1–21.5	21.0–23.1	—	—	**K63**	
21.6–23.9	21.6–23.9	23.2–25.4	—	—	**K64**	
24.0–25.8	24.0–25.8	25.5–27.9	—	—	**K67**	
—	25.9–29.5	—	—	—	**K68**	
—	—	28.0–30.5	—	—	**K69**	
—	29.6–32.7	30.6–33.5	36.8–40.0	—	**K70**	
—	32.8–36.0	33.6–37.2	40.1–42.4	—	**K72**	
—	—	37.3–40.7	42.5–46.3	—	**K73**	
—	—	40.8–43.0	46.4–49.6	—	**K74**	
—	—	43.1–47.9	49.7–52.3	49.7–52.3	**K75**	
—	—	48.0–52.7	52.4–57.5	52.4–57.5	**K76**	
—	—	52.8–58.3	57.6–63.9	57.6–63.0	**K77**	
—	—	58.4–60.0	64.0–67.9	63.1–68.1	**K78**	
—	—	—	68.0–74.3	68.2–74.3	**K83**	
—	—	—	74.4–77.9	74.4–79.9	**K85**	
—	—	—	78.0–83.1	80.0–87.4	**K86**	
—	—	—	83.2–91.4	87.5–90.0	**K87**	
—	—	—	91.5–99.9	90.1–100.0	**K88**	
—	—	—	100.0–108.0	100.1–108.0	**K89**	
—	—	—	—	108.1–119.0	**K90**	
—	—	—	—	119.1–130.0	**K92**	
—	—	—	—	—	**K94**	
—	—	—	—	—	**K96**	

Table 335 for Class 48

Full Load Amps				Heater Catalog No	List Price $
48DC	48GC	48HA	48JA		
1.56–1.69	—	—	—	**K21**	
1.70–1.84	—	—	—	**K22**	
1.85–1.98	—	—	—	**K23**	
1.99–2.19	—	—	—	**K24**	
2.20–2.43	—	—	—	**K26**	
2.44–2.63	—	—	—	**K27**	
2.64–2.95	—	—	—	**K28**	
2.96–3.21	—	—	—	**K29**	
3.22–3.45	—	—	—	**K31**	
3.46–3.81	—	—	—	**K32**	
3.82–4.10	—	—	—	**K33**	
4.11–4.46	—	—	—	**K34**	
4.47–5.10	—	—	—	**K36**	
5.11–5.49	—	—	—	**K37**	
5.50–6.21	—	—	—	**K39**	
6.22–6.76	—	—	—	**K41**	
6.77–7.62	—	—	—	**K42**	
7.63–8.07	—	—	—	**K43**	
8.08–9.19	—	—	—	**K49**	
9.20–10.0	—	—	—	**K50**	
10.1–11.0	—	—	—	**K52**	
11.1–12.0	—	—	—	**K53**	
12.1–12.7	—	—	—	**K54**	
12.8–13.5	—	—	—	**K55**	
13.6–14.5	—	—	—	**K56**	
14.6–15.7	—	—	—	**K57**	
15.8–16.7	—	—	—	**K58**	
16.8–17.9	—	—	—	**K60**	
18.0–19.2	18.0–19.2	—	—	**K61**	
19.3–20.5	19.3–20.5	23.2–25.1	—	**K62**	
20.6–22.5	20.6–22.5	25.2–27.3	—	**K63**	
22.6–24.8	22.6–24.8	27.4–30.4	—	**K64**	
24.9–27.6	24.9–27.6	30.5–33.3	—	**K67**	
27.7–30.0	—	33.4–36.5	—	**K68**	
—	27.7–30.1	36.6–39.3	—	**K69**	
—	30.2–33.1	39.4–43.5	—	**K70**	
—	33.2–36.7	43.6–46.6	43.0–46.5	**K72**	
—	36.8–40.1	46.7–51.1	46.6–50.9	**K73**	
—	40.2–45.5	51.2–56.3	51.0–55.9	**K74**	
—	45.6–47.9	56.4–61.1	56.0–59.1	**K75**	
—	48.0–52.7	61.2–64.9	59.2–68.7	**K76**	
—	52.8–55.1	65.0–71.9	—	**K77**	
—	55.2–60.0	72.0–80.7	68.8–80.7	**K78**	
—	—	80.8–92.7	80.8–92.7	**K85**	
—	—	92.8–100.0	92.8–103.9	**K86**	
—	—	—	104.0–113.5	**K87**	
—	—	—	113.6–127.9	**K89**	
—	—	—	128.0–143.9	**K92**	
—	—	—	144.0–163.9	**K94**	
—	—	—	164.0–180.0	**K96**	

Starters and Contactors – AC Coils

Selection

Ordering Information

► 4th character of starter or contactor catalog number indicates model.

AC Coils — For Class 14, 17, 18, 22, 25, 26, 30, 32, 36, 37, 40, 43, 83, 84, 87, 88

	Size	Model	Volts 60Hz	Volts 50Hz	Catalog Number	List Price $
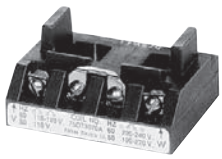	00–2½	P U (ESP200)	24 120 110–120/220–240 208 220–240 277 220–240/440–480 440–480 575–600	24 110 110/190–220 — 190–220 240 190–220/380–440 380–440 550	**75D73070J** **75D73070F** **75D73070A** **75D73070D** **75D73070G** **75D73070L** **75D73070C** **75D73070H** **75D73070E**	
	3 , 3½	P U (ESP200)	24 120 110–120/220–240 208 220–240 277 220–240/440–480 440–480 575–600	24 110 110/190–220 — 190–220 240 190–220/380–440 380–440 550	**75D73251J** **75D73251F** **75D73251A** **75D73251D** **75D73251G** **75D73251L** **75D73251C** **75D73251H** **75D73251E**	
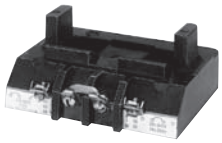	4	G U (ESP200)	24 120 120/220–240 208 220–240 277 220–240/440–480 440–480 575–600	24 110 110/190–220 — 190–220 240 190–220/380–440 380–440 550	**75D70131J** **75D70131F** **75D70131A** **75D70131D** **75D70131G** **75D70131L** **75D70131C** **75D70131H** **75D70131E**	
	4, 5	V (Vacuum)	23-26 110-127 200-220 220-240 240-277 380-420 440-480 575-600	23-26 110-127 200-220 220-240 240-277 380-420 440-480 575-600	**3RT1966-5AB31** **3RT1966-5AF31** **3RT1966-5AM31** **3RT1966-5AP31** **3RT1966-5AU31** **3RT1966-5AV31** **3RT1966-5AR31** **3RT1966-5AT31**	
	5	P	23-26 110-127 200-220 220-240 240-277 380-420 440-480 575-600	23-26 110-127 200-220 220-240 240-277 380-420 440-480 575-600	**3RT1965-5AB31** **3RT1965-5AF31** **3RT1965-5AM31** **3RT1965-5AP31** **3RT1965-5AU31** **3RT1965-5AV31** **3RT1965-5AR31** **3RT1965-5AT31**	
	6	P V (Vacuum)	23-26 110-127 200-220 220-240 240-277 380-420 440-480 575-600	23-26 110-127 200-220 220-240 240-277 380-420 440-480 575-600	**3RT1975-5AB31** **3RT1975-5AF31** **3RT1975-5AM31** **3RT1975-5AP31** **3RT1975-5AU31** **3RT1975-5AV31** **3RT1975-5AR31** **3RT1975-5AT31**	
	7	H	100-250 150-500	100-250 150-500	**75ZAF750-70** **75ZAF750-71**	
	8	H	100-250	100-250	**75ZAF1650-70**①	

① Set of 2 coils. Recommend to change printed circuit board when changing coils. **49ZP1650** see page 9/132.

Starters and Contactors – DC Coils, Late Break Aux Contacts, Rectifiers, Contact Kits

Selection

Ordering Information

- ► 4th character of starter or contactor catalog number indicates model.
- ► DC Coils for Size 00-4 require Late Break Interlock.

DC Coils — For Class 14, 17, 18, 22, 25, 26, 30, 32, 40, 43

	Size	Model	Volts DC	Catalog Number	List Price $
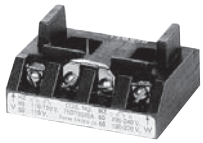	00–2½	P U (ESP200)	12 24 32 48 125 250	**75D73070R** **75D73070S** **75D73070T** **75D73070U** **75D73070V** **75D73070W**	
	3, 3½	P U (ESP200)	12 24 32 48 125 250	**75D73251R** **75D73251S** **75D73251T** **75D73251U** **75D73251V** **75D73251W**	
	4	G U (ESP200)	48 125 250	**75D70131U** **75D70131V** **75D70131W**	
	4, 5	V (Vacuum)	23-26 42-48 110-127 240-277	**3RT1966-5AB31** **3RT1966-5AD31** **3RT1966-5AF31** **3RT1966-5AU31**	

Note: For sizes 7 & 8 contactors the AC coils are used for DC see page 9/129.

Late Break Auxiliary Contacts

	Control Size	Model	Catalog Number	List Price $
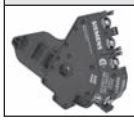	00–4	P, G, S, T	**49AB01LB**	

Board for Size 8 Contactor

	Control Size	Model	Catalog Number	List Price
	8	H	**49ZP1650**	

Contact Kits – Single Pole Stationary and Movable Contacts, Contact Spring ①

Description	Size	Number of Poles in Kit	Model (4th position in part number)	Catalog Number	List Price $
Class 14, 17, 18, 22, 25, 26, 30, 32, 36, 37, 40, 43, 83, 84, 87, 88	Internal Aux Contact (00-1-¾) 00 0		P, U P, U P, U	**75AF14** **75BF14** **75CF14**	
	1 1¾–1P	1	P, U P, U	**75DF14** **75EF14**	
	2	1	P, U	**75FP14**	
	2½	1	P, U	**75GP14**	
	3 3½	1	P, U P, U	**75HF14** **75IF14**	
	4 4 (Vacuum)	1 3 (Bottles)	G, T V, C	**75JG14** **3RT1964-6V**	
	5 5 (Vacuum)	3 3 (Bottles)	P V, C	**3RT1966-6A** **3RT1966-6V**	
	6 6 (Vacuum)	3 3 (Bottles)	P V, C	**3RT1976-6A** **3RT1976-6V**	
14, 40	7	3	H	**49ZL750**	
	8	3	H	**49ZL1650**	

Armature and Magnet Kits

Size	Catalog Number	List Price $
00–2½	**49AMSA2**	
3–3½	**49AMSA3**	
4	**49AMSA4**	

① On 3-phase controls, all 3-poles should be replaced - 3 kits required.

Starters and Contactors – Coil VA Ratings and Overload Relays

Selection

Coil VA Ratings

Device Type	Contactor Size	Amps	Volts	Number of Poles	Total Inrush VA	Total Sealed VA
NEMA Starter	00 thru 2 1/2	—	—	—	218	25
	3 thru 3 1/2	—	—	—	310	26
	4	—	—	—	510	51
	5	—	—	—	590	6.7
	6	—	—	—	830	9.2
	7	—	—	—	850	12
	8	—	—	—	1900	48
	4,5,6 (Vacuum)	—	—	—	630	7.4
Lighting Contactor Mechanically Held (CLM)	—	20	—	2-12	625	6
	—	30	—	2-5	410	40
	—	60	—	2-3	410	40
	—	60	—	4-5	600	40
	—	100 - 200	—	2-3	900	200
	—	100 - 200	—	4-5	1300	130
	—	300 - 400	—	3	1600	550
Lighting Contactor Electrically Held Held (LC)	—	30	ALL	2-12	248	28
Lighting Contactor Electrically Held Held (LE)	—	20	ALL	3 and 4	31.7	4.8
	—	30	ALL	3 and 4	87	9.4
	—	60	ALL	3	166	12.6
	—	100	ALL	3	300	21
	—	200	ALL	3	300	5.6
	—	300	ALL	3	590	6.7
	—	400	ALL	3	830	9.2

Overload Relays①② – For Class 14, 17, 18, 22, 25, 26, 30, 32, 83, 84, 87

Size	Half Size	Model	Number Poles	Ambient Comp Bimetal			
				Catalog Number (1) NC	List Price $	Catalog Number (1) NO/NC	List Price $
00–1	—	P	1 3	**48DC18AA3** **48DC38AA3**		**48DC39AA3**	
1P	—	P	1	**48EC18AA3**			
—	1¾	P	3	**48EC38AA3**		**48EC39AA3**	
2	—	P	1 3	**48GC18AA3** **48GC38AA3**		**48GC39AA3**	
—	2½	P	1 3	**48GC18AA3** **48GC38AA3**		**48GC39AA3**	
3	—	P	3	**48HC38AA3**			
—	3½	P	3	**48HC38AA3**			
4	—	G	3	**48JC38AA3**			

For Starter and Contactor replacement parts not found in this section, please refer to Field Modification kits found starting on page 9/103.

① For replacement Solid State overload relays, please see the Overload Relay section found starting on page 9/64.

② Includes overload mounting plate to be coupled to contactor mounting plate.

Lighting and Heating Contactors, Type LC, LE, CLM, CMF, CMN

Selection

Power Pole Kits	Class	Enclosure type	Contactor Size (Amp)	Description	Catalog No.
	LC	Open, 1, 12, 4/4X	30	Single power pole Double power pole	**49LCPP1A** **49LCPP2A**

Replacement Coil Kits	Class	Enclosure type	Description	Catalog No.
	LC	30	24V 60Hz / 20V 50Hz 115-120V 60Hz / 110V 50Hz 200-208V 60Hz 230-240V 60Hz / 220V 50Hz 277V 60Hz / 240V 50Hz 347V 60Hz 460-480V 60Hz / 440V 50Hz 575-600V 60Hz / 550V 50Hz	**75LCC024A** **75LCC120A** **75LCC208A** **75LCC240A** **75LCC277A** **75LCC347A** **75LCC480A** **75LCC600A**
	LE	20, 30	NA	**NA**
		60	24VAC 50/60Hz 110VAC 50Hz / 120VAC 60Hz 208VAC 50/60Hz 220VAC 50Hz / 240VAC 60Hz 277VAC 60Hz 347VAC 60Hz 480VAC 60Hz 600VAC 60Hz	**3RT19355AC21** **3RT19355AK61** **3RT19355AM21** **3RT19355AP61** **3RT19355AU61** **3RT19355AW61** **3RT19355AV61** **3RT19355AT61**
		100	24VAC 50/60Hz 110VAC 50Hz / 120VAC 60Hz 208VAC 50/60Hz 220VAC 50Hz / 240VAC 60Hz 277VAC 60Hz 347VAC 60Hz 480VAC 60Hz 600VAC 60Hz	**3RT19455AC21** **3RT19455AK61** **3RT19455AM21** **3RT19455AP61** **3RT19455AU61** **3RT19455AW61** **3RT19455AV61** **3RT19455AT61**

Replacement Contact Kits	Class	Enclosure type	Description	Catalog No.
	LC	30	NA	**NA**
	LE	20, 30	NA	**NA**
		60 100 200 300 400	1 contact kit includes 3 moving and 6 fixed contacts.	**3RT1935-6A** **3RT1945-6A** **3RT1956-6A** **3RT1965-6A** **3RT1975-6A**

AC Coils 20 Amps②

CLM4097341	Type	Contactor Size	Number of Poles	120V, 60Hz 110V, 50Hz	List Price $	240V, 60Hz 208V, 50Hz	List Price $	277V 50/60Hz	List Price $
	CLM	20 Amp	2–12	**CLM4097341**		**CLM4097342**		**CLM4097343**	

AC Coils 30–400 Amps③

CLMC4C120 **CLMGU3C120**	Type	Contactor Size	Number of Poles	Catalog Number 24V AC	120V AC	208V AC	220/240V AC	277V AC	480V AC	600V AC	List Price $
	CLM†C	30 Amp	2–3-Pole 4-Pole 5-Pole	**CLMC4C024** **CLMC4C024** **CLMC5C024**	**CLMC4C120** **CLMC4C120** **CLMC5C120**	**CLMC4C208** **CLMC4C208** **CLMC5C208**	**CLMC4C240** **CLMC4C240** **CLMC5C240**	**CLMC4C277** **CLMC4C277** **CLMC5C277**	**CLMC4C480** **CLMC4C480** **CLMC5C480**	**CLMC4C600** **CLMC4C600** **CLMC5C600**	
	CLM†D	60 Amp	2–3-Pole 4-Pole 5-Pole	**CLMD3C024** **CLMD5C024** **CLMD5C024**	**CLMD3C120** **CLMD5C120** **CLMD5C120**	**CLMD3C208** **CLMD5C208** **CLMD5C208**	**CLMD3C240** **CLMD5C240** **CLMD5C240**	**CLMD3C277** **CLMD5C277** **CLMD5C277**	**CLMD3C480** **CLMD5C480** **CLMD5C480**	**CLMD3C600** **CLMD5C600** **CLMD5C600**	
	CLM†E	100, 200 Amp	2–3-Pole 4-Pole 5-Pole	**CLME3C024** **CLME5C024** **CLME5C024**	**CLME3C120** **CLME5C120** **CLME5C120**	**CLME3C208** **CLME5C208** **CLME5C208**	**CLME3C240** **CLME5C240** **CLME5C240**	**CLME3C277** **CLME5C277** **CLME5C277**	**CLME3C480** **CLME5C480** **CLME5C480**	**CLME3C600** **CLME5C600** **CLME5C600**	
	CLM†G Latching Coil	300/400 Amp	2–3-Pole	—	**CLMGL3C120**	**CLMGL3C208**	**CLMGL3C240**	**CLMGL3C277**	**CLMGL3C480**	**CLMGL3C600**	
	Unlatch Coil		2–3-Pole	—	**CLMGU3C120**	**CLMGU3C208**	**CLMGU3C240**	**CLMGU3C277**	**CLMGU3C480**	**CLMGU3C600**	

Control Module Rectifier③

Type	Device	Contactor Size	Number of Poles	Catalog Number	List Price $
CLM	CLM†C to CLM†F	30–200 Amps	All	**CLMKCMR**	

① Product Category: IEC.
② Coil kits for 20 amp CLM contactors include the coil clearing auxiliary contact.
③ For 30–200 amp CLM contactors, in the event that either the coil or the control module fails, it is recommended that both be replaced.

Lighting Contactors, CLM, CMB, CMF & CMN

Selection

Ordering Information

- **For CLM:** 5th character of contactor catalog number indicates Frame Size.
- **For CMB, CMF, CMN:** 4th character of contactor catalog number indicates Frame Size.

Main Contacts 20 Amp Lighting Contactors

CLM4097334

Type	Contactor Size	Number of Poles	Location	Catalog Number	List Price $
CLM	20 Amp	2 3 4 6	Top or Bottom Top Top or Bottom Top or Bottom	**CLM4097331** **CLM4097332** **CLM4097333** **CLM4097334**	

Main Contacts 30–400 Amp Lighting Contactors

Type	Frame Size	Contactor Size	Number of Poles	Catalog Number	List Price $
CLM	C	30 Amp	2 3 4 5	**CLMCCK02** **CLMCCK03** **CLMCCK04** **CLMCCK05**	
	D	60 Amp	2 3 4 5	**CLMDCK02** **CLMDCK03** **CLMDCK04** **CLMDCK05**	
	E	100 Amp	2 3 4 5	**CLMECK02** **CLMECK03** **CLMECK04** **CLMECK05**	
	F	200 Amp	2 3 4 5	**CLMFCK02** **CLMFCK03** **CLMFCK04** **CLMFCK05**	
	G	300 Amp	2 3	**CLMGCK02** **CLMGCK03**	
	H	400 Amp	2 3	**CLMHCK02** **CLMHCK03**	

Auxiliary Contact Blocks 20 Amp Lighting Contactors②

Type	Contactor Size	Contacts	Catalog Number	List Price $
CLM	20 Amp	1 Form C NO, NC Contact 2 Form C NO, NC Contacts	**CLM4097291** **CLM4097292**	

Auxiliary Contact Blocks 30–400 Amp Lighting Contactors

CLMFCAK11

Type	Frame Size	Contactor Size	Contact Configuration	Catalog Number	List Price $
CLM	C to F②	30–200 Amps	1 NO and 1 NC 2 NC 2 NO 1 Coil Clearing NO and NC	**CLMFCAK11** **CLMFCAK02** **CLMFCAK20** **CLMFCCK11**	
	G to H①	300–400 Amps	1 NO and 1 NC 2 NC 2 NO 1 Coil Clearing NO and NC	**CLMHCAK11** **CLMHCAK02** **CLMHCAK20** **CLMHCCK11**	

① Maximum 1 block per contactor.
② Maximum 2 blocks per contactor.

Replacement Handle Assemblies and Disconnect Mechanisms
Enclosure Types 1, 3R, 4, 4X Stainless Steel & 12

Class	Disconnect (Amps)	Enclosure Size	Handle Assembly Only		Handle Assembly and Disconnect Mechanism	
			Catalog Number	List Price $	Catalog Number	List Price $
17, 25, 32, 84, 87, CM, LE	30, 60 & 100	All Standard and Extra-wide Sizes	**75D73944015**		**75D68257103**	
37, 88	30 & 60		**75D73944018**		**75D68257048**	
17, 25, 32, 84	200		**75D73944015**		**75D68257105**	
37, 88, CM, LE	200		**75D73944015**		**75D68257063**	
87	200		**75D73944023**		**75D68257068**	
17, 25, 37, 87, 88, CM, LE	400 & 600		**75D73944027**		**75D68257078**	

Class	Motor Circuit Interrupter (Amps)	Enclosure Size	Handle Assembly Only		Handle Assembly and Disconnect Mechanism	
			Catalog Number	List Price $	Catalog Number	List Price $
18, 26, 32, CM, LE	3 - 125	(24"H x 11"W x 8"D), (24"H x 20"W x 8"D)	**75D73944025**		**75D68257080**	
18, 26, 32	100 - 125	(36"H x 24"W x 8"D)	**75D73944025**		**75D68257073**	
18, 26, 32	150 & 250	All Standard Sizes	**75D73944028**		**75D68257089**	
18, 26, 37, 87, 88, CM	300 - 600		**75D73944027**		**75D68257078**	
87	3 - 125		**75D73944025**		**75D68257080**	
87	150		**75D73944028**		**75D68257089**	
87	250		**75D73944011**		**75D68257077**	
37, 88	30 - 125		**75D73944025**		**75D68257073**	
37, 84, 88, CM	150 - 250		**75D73944011**		**75D68257077**	
84	3 - 125		**75D73944025**		**75D68257074**	

Quarter Turn Assemblies

Description		Class	Enclosure Type	Catalog Number	List Price $
	Quarter-Turn Latch	17, 18, 25, 26, 32, 87 & 88	1, 3/3R & 12	75D46260004	
			4 & 4X	75D46260005	

Dimensions

Class SMF and MMS Open Type

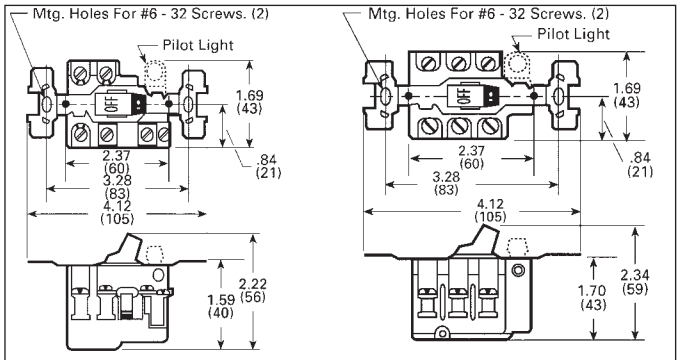

Class SMF
①Types FO–1, 1P, 2, 2P
(with toggle operator)

Class MMS
①Types KO–1, 1A, 1B, 2, 2B, 2C
(with toggle operator)

NEMA Type 1B General Purpose Flush Mounting

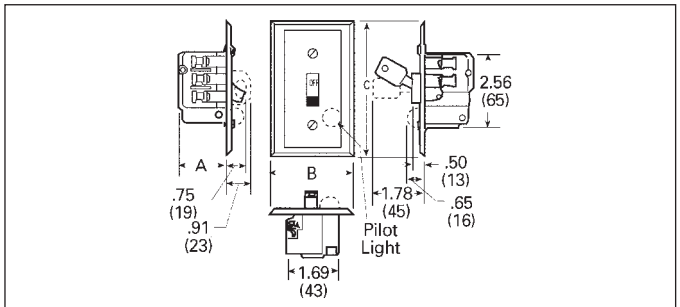

Device	Type of Operator	Type	Dimensions in Inches (mm) A	B	C
Class SMF Fractional HP Starter	Toggle	**FF1, 1P, 2, 2P** **FS1, 1P, 2, 2P**	1.44 (37)	2.75 (70)	4.50 (114)
		FSJ1P, 2P	1.44 (37)	3.50 (89)	5.25 (133)
	Key	**FF3, 3P, 4, 4P** **FS3, 3P, 4, 4P**	1.44 (37)	2.75 (70)	4.50 (114)
		FSJ3P, 4P	1.44 (37)	3.50 (89)	5.25 (133)
Class MMS Motor Starting Switch	Toggle	**KF1, 1A, 1B, 2, 2B, 2C** **KS1, 1A, 1B, 2, 2B, 2C**	1.75 (44)	2.75 (70)	4.50 (114)
		KSJ1A, 1B, 2B, 2C	1.75 (44)	3.50 (89)	5.25 (133)
	Key	**KF3, 3A, 3B, 4, 4B, 4C** **KS3, 3A, 3B, 4, 4B, 4C**	1.75 (44)	2.75 (70)	4.50 (114)
		KSJ3A, 3B, 4B, 4C	1.75 (44)	3.50 (89)	5.25 (133)

NEMA Type 3R, 4 and 12

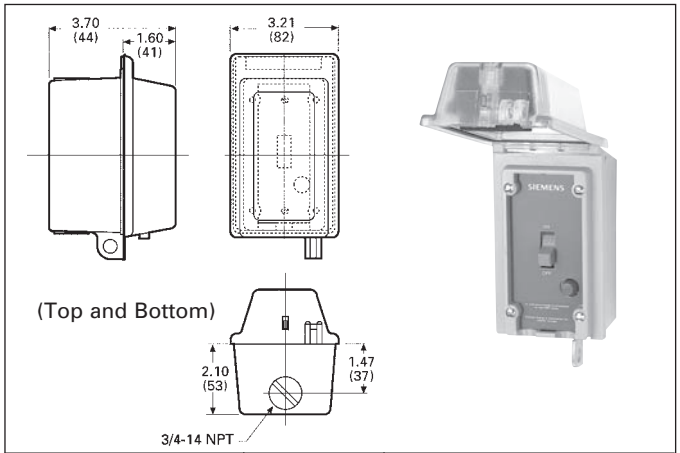

Device	Class	Type
Fractional HP Starter	SMF	**FWN1, 1P, FWN2, 2P** **FWN3, 3P, FW4, 4P**
Motor Starting Switch	MMS	**KWN1, 1A, 1B, KWN2, 2B, 2C** **KWN3, 3A, 3B, KWN4, 4B, 4C**

NEMA Type 4 Watertight Die Cast Zinc Enclosure

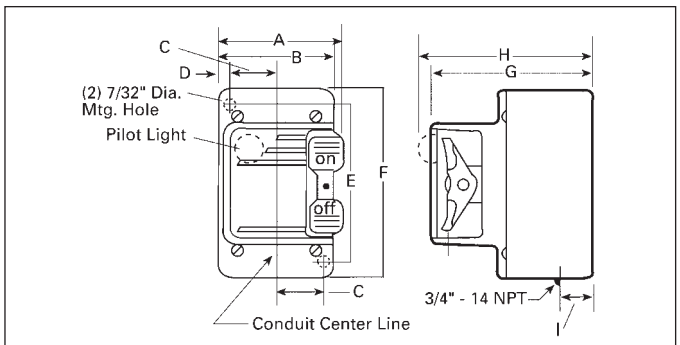

Dimensions in Inches (mm)								
A	**B**	**C**	**D**	**E**	**F**	**G**	**H**	**I**
3.00 (76)	2.75 (70)	1.13 (28)	0.25 (6)	3.75 (95)	4.69 (119)	4.25 (108)	4.56 (116)	0.78 (20)

Device	Class	Type
Fractional HP Starter	SMF	**FW1, 1P, 2, 2P**
Motor Starting Switch	MMS	**KW1, 1A, 1B, 2, 2B, 2C**

NEMA Type 1 General Purpose Surface Mounting Enclosures

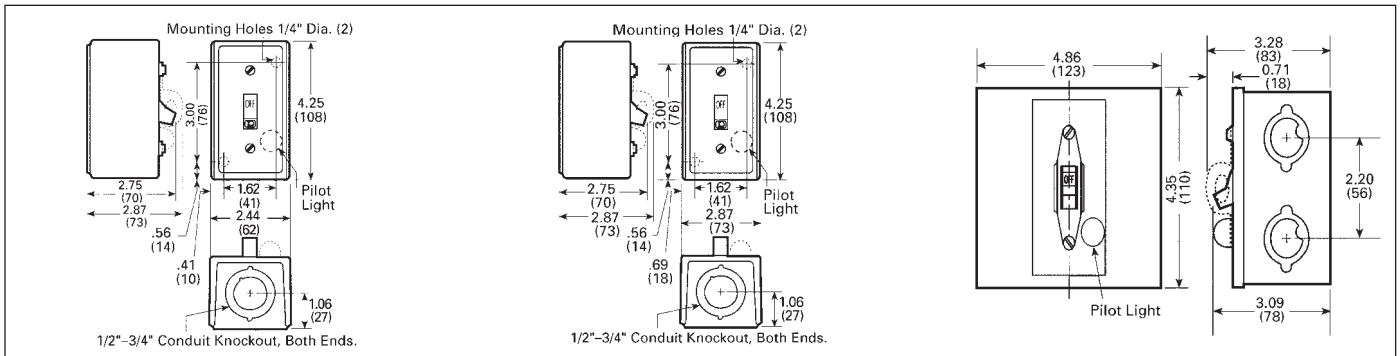

Standard Size—Class SMF and MMS
Types FG & KG (Single-Unit)

Oversized—Class SMF and MMS
Types FGJ & KGJ (Single-Unit)

Jumbo MMSKE2
½″–¾″ Knock-Out On Back and Sides

Note: Dimensions for reference, not for construction. Dimensions are in inches (mm).

① Dimensions typical for key operator devices.

Dimensions

NEMA Type 7 and 9 Cast Aluminum Enclosure

Dimensions in Inches (mm)					
A	B	C	D	G	H
4.00 (101)	5.75 (146)	1.38 (35)	6.36 (161)	4.38 (111)	1.20 (30)

Device	Class	Type
Fractional HP Starter	SMF	**FR1, FR2**
Motor Starting Switch	MMS	**KR1, KR2**

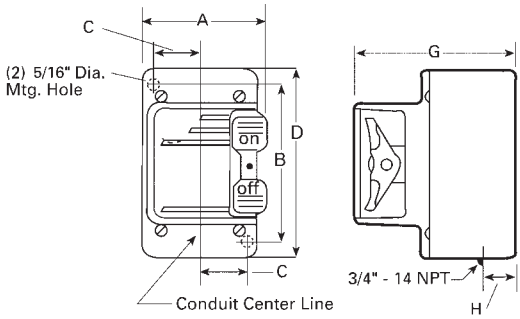

NEMA Type 1 General Purpose Enclosure For Two Unit Devices

Device	Type of Operator	Class	Type
One Starter	Toggle	SMF	**FG02, 02P**
	Key	SMF	**FG04P**
Two Starters	Toggle	SMF	**FG222, 222P**
	Key	SMF	**FG44P**
One Starter and One Sel. Switch①	Toggle	SMF	**FG71, 71P, 72, 72P**
	Key	SMF	**FG74P**
Reversing Switch②	Toggle	MRS	**KG11, 11A, 11B, 22, 22A, 22B, 22C**
Two Speed Starter	Toggle	SMF	**FG11, 11P, 22, 22P**
Two Speed Switch	Toggle	MMS	**KG11, 11A, 11B, 22, 22B, 22C**

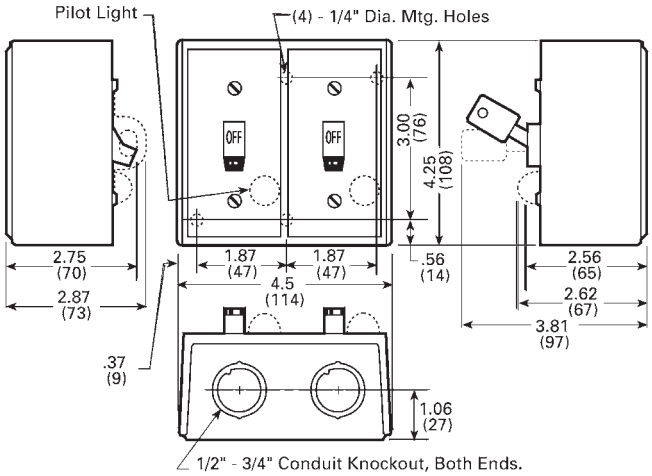

NEMA Type 1B General Purpose Flush Mounting For Two Unit Devices

Device③	Type of Operator	Class	Type	A	B	C	D
Two Starters	Toggle	SMF	**FF22, 22P**	5.25 (133)	3.75 (95)	5.25 (133)	1.44 (37)
			FS22P	4.56 (116)	3.50 (89)	4.50 (114)	1.44 (37)
	Key	SMF	**FF44P**	5.25 (133)	3.75 (95)	5.25 (133)	1.44 (37)
			FS44P	4.56 (116)	3.50 (89)	4.50 (114)	1.44 (37)
One Starter and One Selector Switch④	Toggle	SMF	**FF71, 71P, 72, 72P**	5.25 (133)	0.75 (19)	5.25 (133)	2.00 (51)
			FS71P, 72P	4.56 (116)	3.50 (89)	4.50 (114)	2.00 (51)
	Key	SMF	**FF74P**	5.25 (133)	3.75 (95)	5.25 (133)	2.00 (51)
			FS74P	4.56 (116)	3.50 (89)	4.50 (114)	2.00 (51)
Reversing Switch	Toggle	MRS	**KF11, 11A, 11B KF22, 22A 22B, 22C**	5.25 (133)	3.75 (95)	5.25 (133)	1.75 (44)
Two Speed Switch	Toggle	SMF	**FF11, 11P, 22, 22P**	5.25 (133)	3.75 (95)	5.25 (133)	1.44 (37)
Two Speed Switch	Toggle	MMS	**KF11, 11A, 11B 22, 22B, 22C**	5.25 (133)	3.75 (95)	5.25 (133)	1.44 (37)

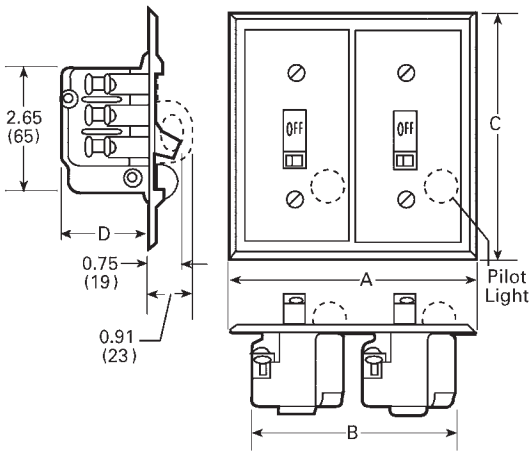

Note: Dimensions for reference, not for construction. Dimensions are in inches (mm).

① Selector switch is on the left, increases overall depth to 3.50 in. (89 mm).
② Only one pilot light (located on right) is used on MRS switches.
③ Dimensions include factory wired power connections.
④ Selector switch is on the left, extends 1.62 in. (41 mm) from mounting surface.

3RV102

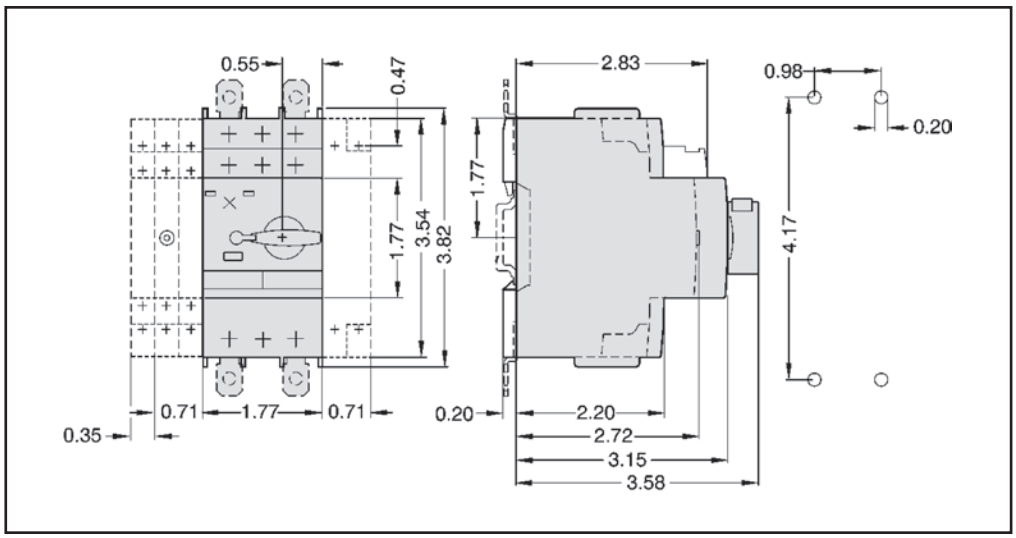

Class 11 - NEMA 1 Enclosure

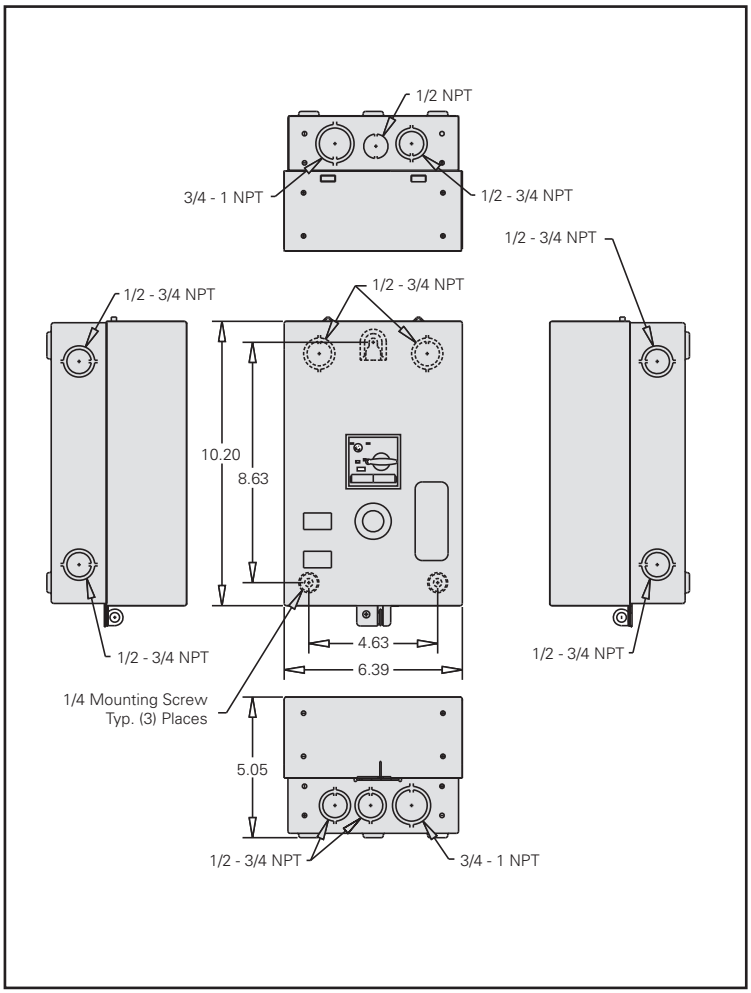

Class 11 - NEMA 7 & 9, 3 & 4, and NEMA 7 & 9 Enclosure

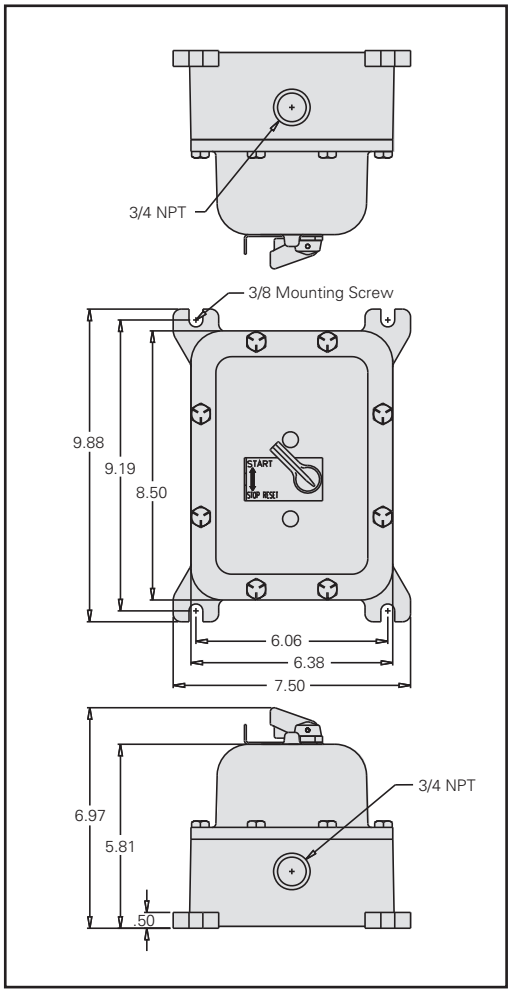

Note: Dimensions in inches (millimeters). Dimensions for reference, not for construction. Contact Sales Office for dimensions not listed.

Dimensions

Figure 1

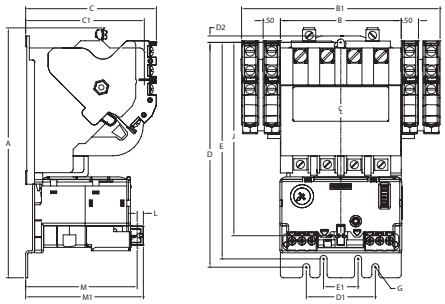

Figure 2

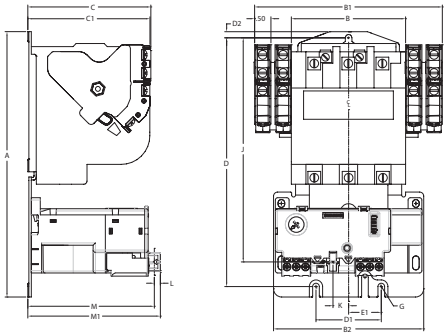

Figure 3

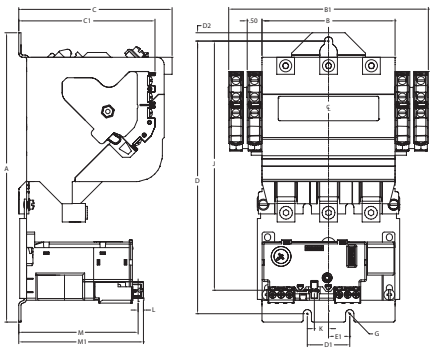

Figure 4

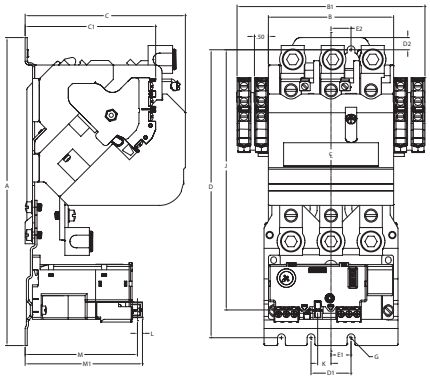

Figure 5

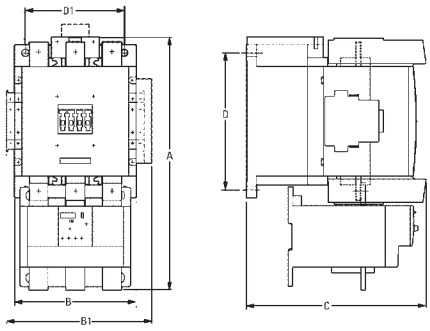

Open Type Solid State Overload

Size	Figure	Outline Dimensions						Mounting Dimensions						Mounting Screw	Reset Dimensions				
		A	B	B1	B2	C	C1	D	D1	D2	E	E1	E2	G	J	K	L	M	M1
00–1¾	1	7.44 (189)	3.50 (89)	5.75 (146)	—	3.75 (95)	3.50 (89)	6.50 (165)	2.00 (51)	0.19 (5)	6.27 (159)	1.00 (25)	—	#10	5.60 (142)	—	0.18 (5)	3.23 (82)	3.41 (87)
2–2½	2	8.13 (207)	3.50 (89)	5.75 (146)	4.60 (117)	4.00 (102)	3.77 (96)	7.62 (194)	2.00 (51)	0.19 (5)	—	1.00 (25)	—	#10	6.87 (174)	0.48 (12)	0.18 (5)	3.88 (99)	4.06 (103)
3–3½	3	9.78 (248)	4.50 (114)	6.75 (171)	—	5.19 (132)	4.66 (118)	9.22 (234)	1.44 (37)	0.28 (7)	—	0.72 (18)	—	0.25 (6)	8.43 (214)	0.48 (12)	0.18 (5)	4.04 (103)	4.22 (107)
4	4	11.06 (281)	4.50 (114)	6.75 (171)	—	5.75 (146)	4.66 (118)	10.34 (263)	1.44 (37)	0.44 (11)	—	0.72 (18)	0.72 (18)	0.25 (6)	9.35 (237)	0.48 (12)	0.18 (5)	4.04 (103)	4.22 (107)
5	5	12.76 (324)	5.71 (145)	6.89 (175)	—	8.54 (217)	—	7.09 (180)	4.72 (120)	—	—	—	—	0.35 (9)	—	—	—	—	—
6	6	13.03 (331)	6.30 (160)	7.48 (190)	—	9.29 (236)	—	7.09 (180)	5.12 (130)	—	—	—	—	0.35 (9)	—	—	—	—	—

Note: Dimensions in inches (millimeters). Dimensions for reference, not for construction. Contact Sales Office for dimensions not listed.

Ambient Compensated Bimetal Class 14

Dimensions

Figure 1

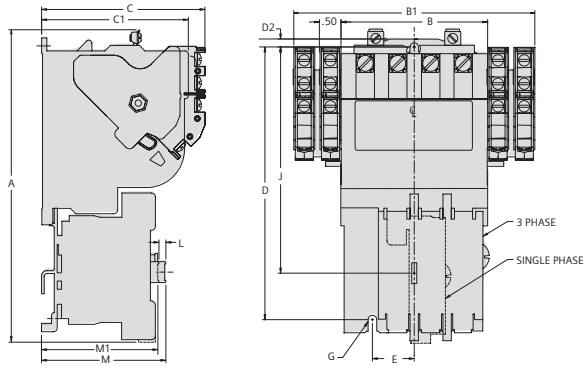

Figure 2

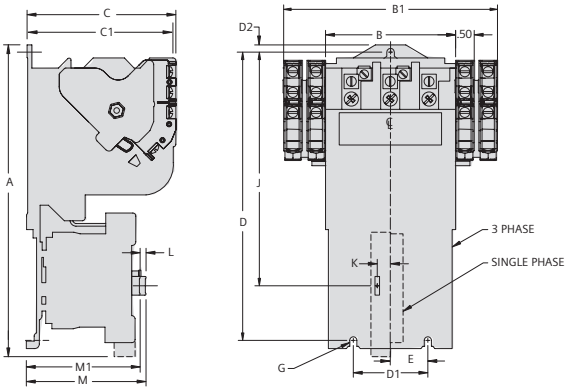

Figure 3

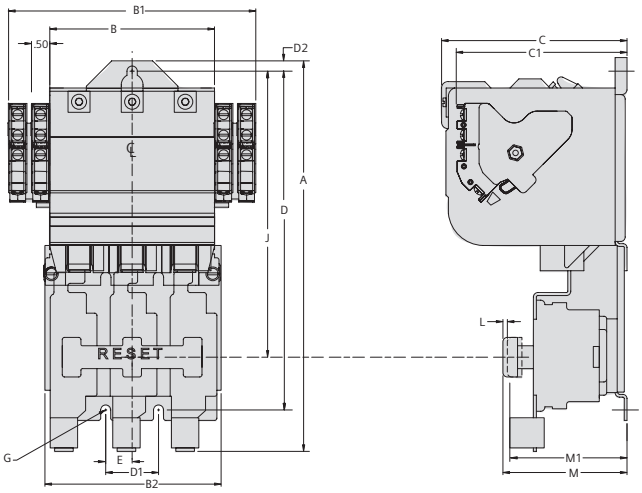

Figure 4

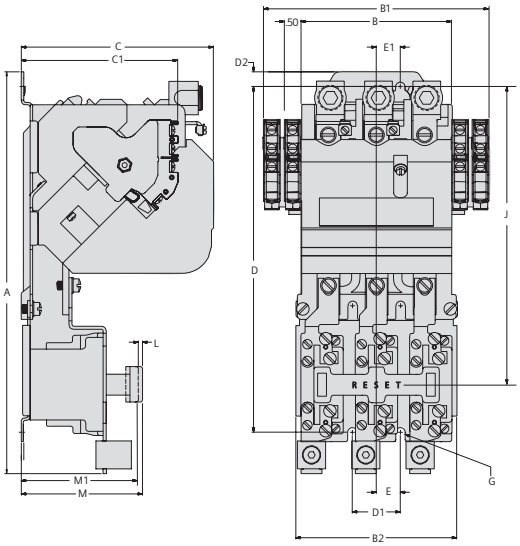

Open Type Ambient Compensated Bimetal Overload

Size	Figure	Outline Dimensions A	B	B1	C	C1	Mounting Dimensions D	D1	D2	E	E1	Mounting Screw G	Reset Dimensions J	K	L	M	M1
00–1¾	1	7.45 (189)	3.50 (89)	5.75 (146)	3.89 (99)	3.50 (89)	6.50 (165)	—	0.19 (4.8)	1.00 (25)	—	#10	5.39 (137)	—	0.16 (4)	2.97 (75)	2.81 (71)
2–2½	2	8.38 (213)	3.50 (89)	5.75 (146)	4.00 (102)	3.77 (96)	7.75 (197)	2.00 (51)	0.19 (4.8)	1.00 (25)	—	#10	6.28 (160)	0.36 (9)	0.16 (4)	3.22 (82)	3.06 (78)
3–3½	3	10.66 (271)	4.50 (114)	6.75 (171)	5.06 (129)	4.66 (118)	9.25 (235)	1.44 (37)	0.28 (7)	0.72 (18)	—	0.25 (6)	7.81 (198)	—	0.12 (3)	3.39 (86)	3.27 (83)
4	4	12.02 (305)	4.50 (114)	6.75 (171)	5.75 (146)	4.66 (118)	10.34 (263)	1.44 (37)	0.44 (11)	0.72 (18)	0.72 (18)	0.25 (6)	8.78 (223)	—	0.12 (3)	3.63 (92)	3.51 (89)

Note: Dimensions in inches (millimeters). Dimensions for reference, not for construction. Contact Sales Office for dimensions not listed.

Solid State Overload Class 22, 30

Dimensions

Figure 1

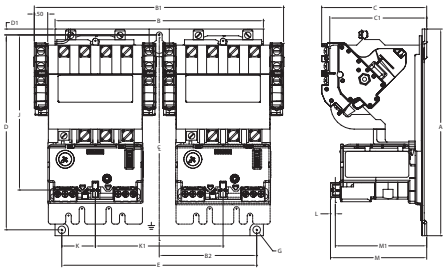

Figure 2

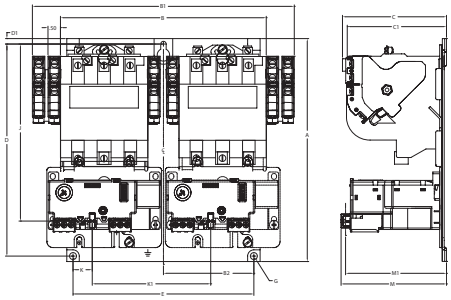

Figure 3

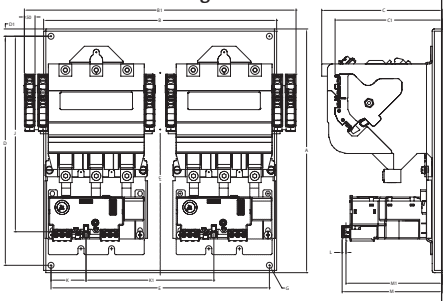

Figure 4

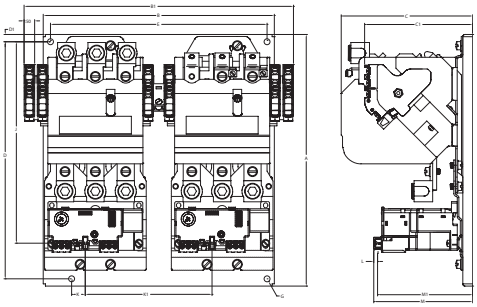

Figure 5

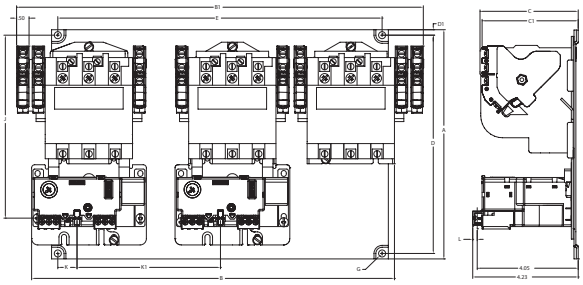

Figure 6

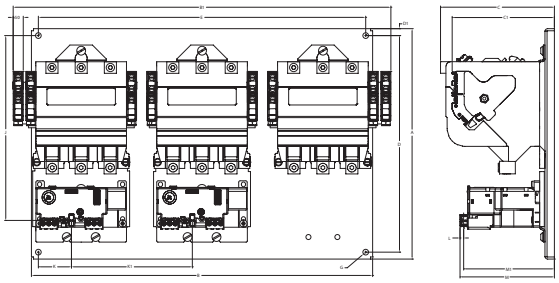

Figure 7

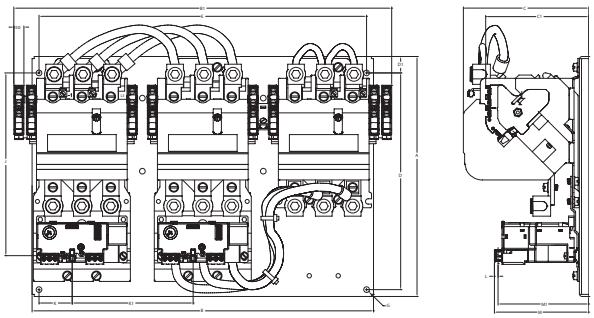

Class 22 Reversing & Class 30 2 Speed/2 Winding

Size	Figure	Outline Dimensions						Mounting Dimensions			Mounting Screw	Reset Dimensions					
		A	B	B1	B2	C	C1	D	D1	E	G	J	K	K1	L	M	M1
00–1¾	1	7.69	7.75	10.50	3.62	3.92	3.61	7.25	0.22	7.25	#10	5.77	1.25	4.75	0.18	3.58	3.40
2–2½	2	8.94	8.25	10.50	3.62	4.17	3.98	8.50	0.22	7.25	#10	7.10	0.77	4.75	0.18	4.23	4.05
3– 3½	3	11.44	10.94	12.75	—	5.65	5.03	10.75	0.34	10.25	#10	9.18	1.64	6.00	0.18	4.69	4.51
4	4	11.91	10.94	12.75	—	6.22	5.12	11.22	0.34	10.25	0.25	9.53	0.65	6.00	0.18	4.68	4.50

Class 30 2 Speed/1 Winding

Size	Figure	Outline Dimensions						Mounting Dimensions			Mounting Screw	Reset Dimensions					
		A	B	B1	B2	C	C1	D	D1	E	G	J	K	K1	L	M	M1
00–1¾	1	7.69	7.75	10.50	3.62	3.92	3.61	7.25	0.22	7.25	#10	5.77	1.25	4.75	0.18	3.58	3.40
2–2½	5	9.19	14.55	16.30	—	3.94	3.85	8.75	0.22	13.00	#10	7.33	0.77	5.75	0.18	4.23	4.05
3–3½	6	11.44	16.94	18.75	—	5.65	5.07	10.75	0.34	16.25	#10	9.18	1.64	6.00	0.18	4.68	4.50
4	7	11.91	16.94	17.75	—	6.22	5.12	10.75	0.82	16.25	#10	9.06	1.64	6.00	0.18	4.68	4.50

Note: Dimensions for reference, not for construction.
Contact sales office for dimensions not listed.
Dimensions are in inches (mm).

Ambient Compensated Bimetal Overload Class 22, 30

Dimensions

Figure 1a

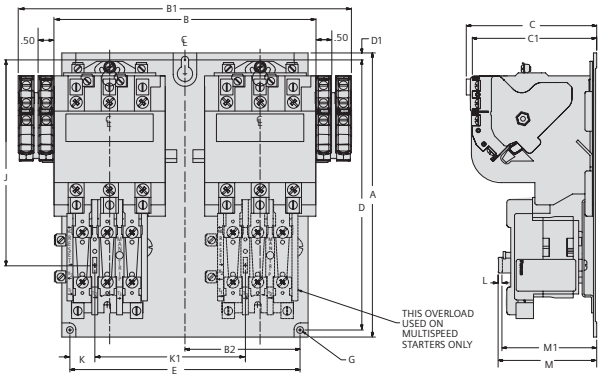

Figure 1b

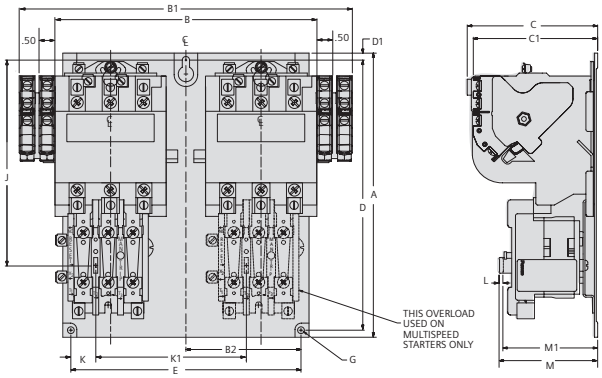

Figure 2

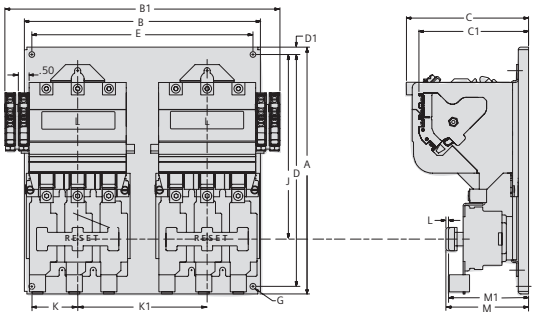

Figure 3

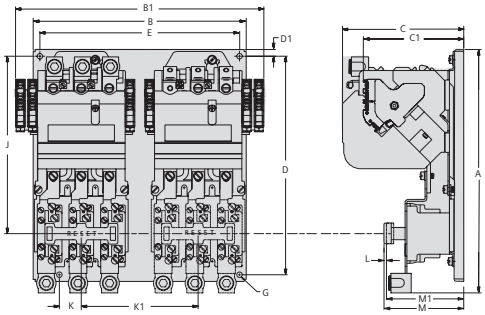

Figure 4

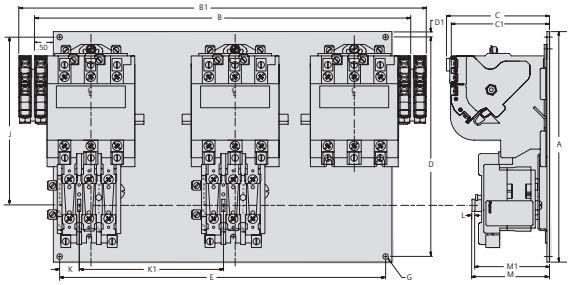

Figure 5

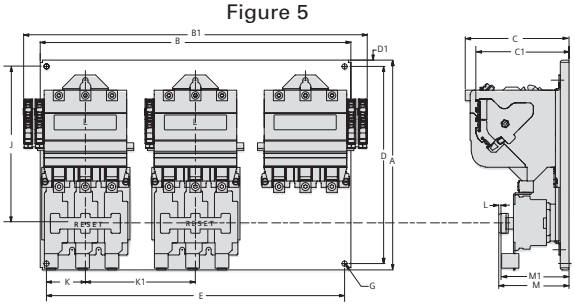

Class 22 Reversing & Class 30 2 Speed/2 Winding with Bimetal Overload

Size	Figure	Outline Dimensions						Mounting Screw			Mounting Dimensions	Reset Dimensions					
		A	B	B1	B2	C	C1	D	D1	E	G	J	K	K1	L	M	M1
00–1¾	1a	7.69	8.25	10.50	3.62	3.92	3.61	7.25	0.22	7.25	#10	5.60	1.25	4.75	0.16	3.12	3.07
2–2½	1b	8.94	8.25	10.50	3.62	4.17	3.98	8.50	0.22	7.25	#10	6.46	0.79	4.75	0.16	3.10	3.05
3–3½	2	11.44	10.94	12.94	—	5.66	5.08	10.75	0.34	10.25	#10	8.56	2.12	6.00	0.12	3.83	3.71
4	3	12.50	10.94	12.75	—	6.22	5.16	11.22	0.34	10.25	0.25	9.11	2.12	6.00	0.12	4.09	3.97

Class 30 2 Speed/1 Winding with Bimetal Overload

Size	Figure	Outline Dimensions						Mounting Screw			Mounting Dimensions	Reset Dimensions					
		A	B	B1	B2	C	C1	D	D1	E	G	J	K	K1	L	M	M1
00–1¾	1a	7.69	8.25	10.50	3.62	3.92	3.61	7.25	0.22	7.25	#10	5.60	1.25	4.75	0.16	3.12	3.07
2–2½	4	9.19	14.56	16.25	—	4.11	3.92	8.75	0.22	13.00	0.25	6.71	0.78	5.75	0.16	3.10	3.05
3–3½	5	11.44	16.94	18.75	—	5.66	5.08	10.75	0.34	16.25	0.25	8.56	2.12	6.00	0.12	3.83	3.71

Note: Dimensions for reference, not for construction.
Contact sales office for dimensions not listed.
Dimensions are in inches (mm).

Full Voltage Open Type NEMA Contactor Size 00-8

Figure 1

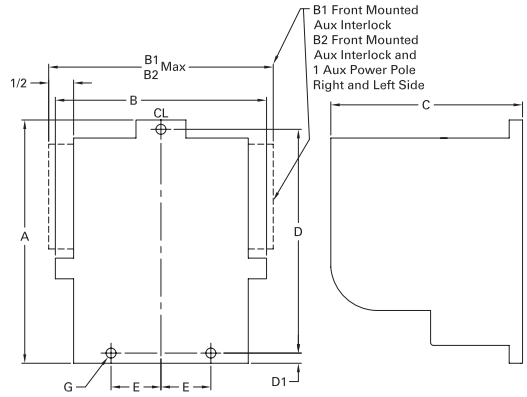

Figure 2

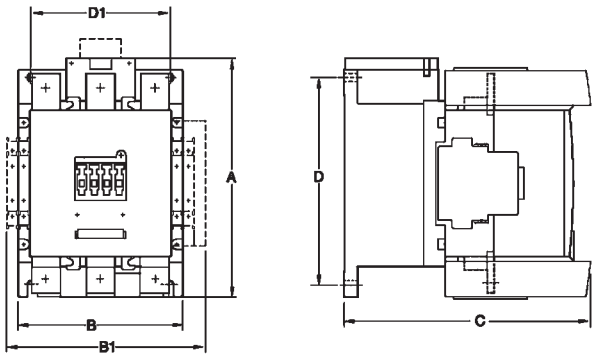

Figure 3

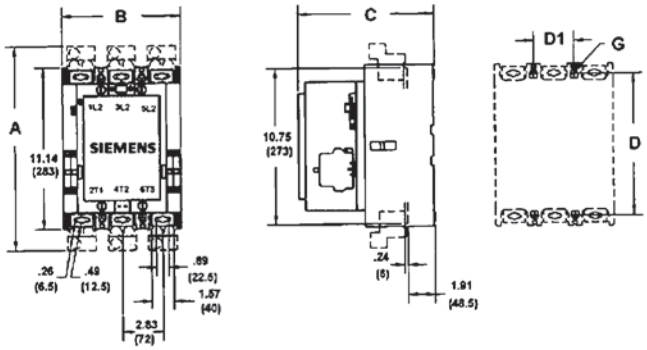

Figure 4

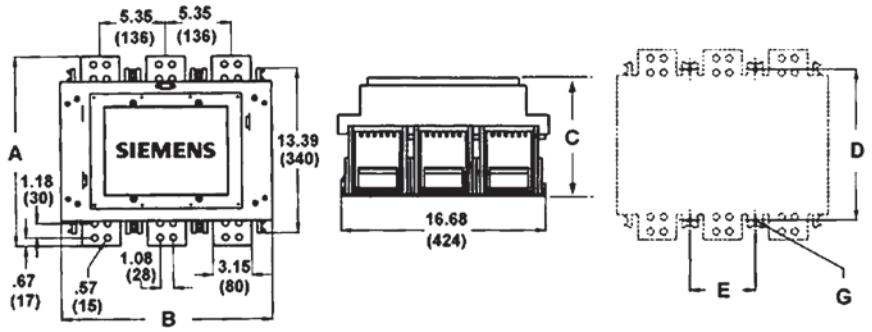

Open Type

Size	3rd Character of Catalog No.①	Outline Dimensions						Mounting Dimensions			Mounting Screw
		Fig	A	B	B1	B2	C	D	D1	E	G
00–1¾	C, D, E	1	4.31 (110)	3.94 (100)	4.25 (108)	4.75 (121)	3.75 (70)	3.94 (100)	0.19 (5)	1.00 (25)	#10
2–2½	F,G	1	4.88 (124)	3.94 (100)	4.25 (108)	—	4.00 (102)	4.50 (114)	0.19 (5)	1.00 (25)	#10
3–3½	H, I	1	6.13 (156)	5.13 (130)	5.50 (140)	—	5.06 (129)	5.63 (143)	0.25 (6)	0.75 (19)	0.25 (6)
4	J	1	7.81 (198)	5.19 (132)	5.50 (140)	—	5.75 (146)	6.56 (167)	0.81 (21)	0.75 (19)	0.5 (13)
5	L	2	8.27 (210)	5.71 (145)	6.89 (175)	—	8.54 (217)	7.09 (180)	4.72 (120)	—	0.35 (9)
6	M	2	8.43 (214)	6.3 (160)	7.48 (190)	—	9.29 (236)	7.09 (180)	5.12 (130)	—	0.35 (9)
7	N	3	14.05 (357)	8.27 (210)	—	—	9.53 (242)	9.80 (249)	2.83 (72)	—	0.25 (6)
8	P	4	15.41 (392)	17.23 (438)	—	—	10.56 (268)	12.28 (312)	—	5.35 (136)	0.35 (9)

Note: Dimensions for reference, not for construction. Contact sales office for dimensions not listed. Dimensions are in inches (mm).

① 3rd character of catalog number identifies contactor rating.

Dimensions

Figure 1

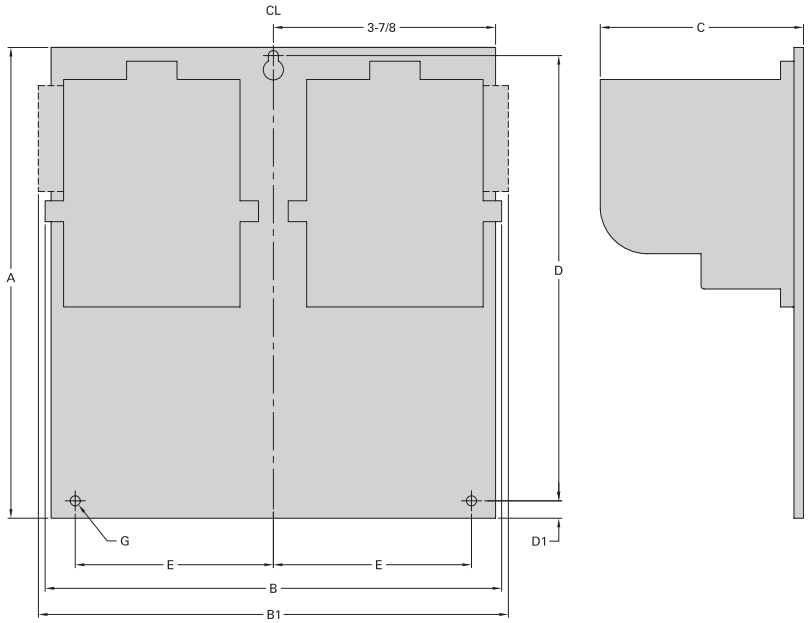

Figure 2

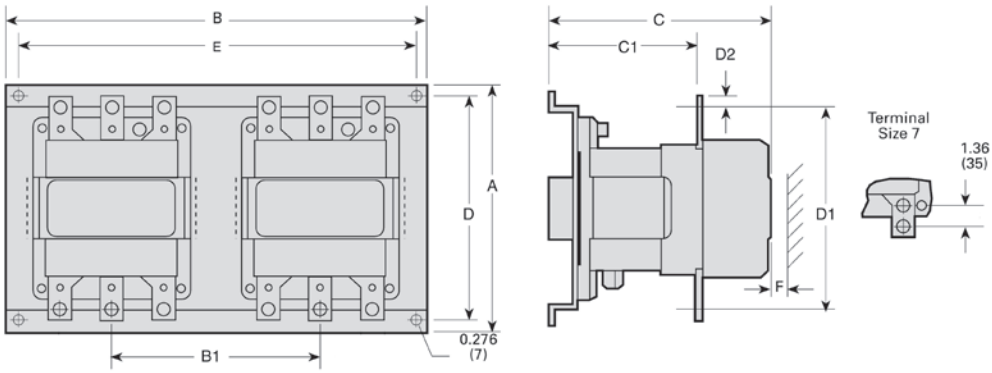

Open Type Horizontal Mounted

Size	Fig.	Outline Dimensions A	B	B1	C	C1	Mounting Dimensions D	D1	E	F	Mouning Screw G
00–1¾	1	7.69 (195)	7.75 (197)	9.25 (235)	3.88 (98)	—	7.25 (184)	0.25 (6)	3.63 (92)	—	#10
2, 2½	1	8.94 (227)	7.75 (197)	9.25 (235)	4.56 (116)	—	8.5 (216)	0.25 (6)	3.63 (92)	—	#10
3–3½	1	11.44 (291)	10.94 (278)	11.50 (292)	5.19 (132)	—	10.75 (273)	0.38 (6)	5.13 (130)	—	0.25
4	1	8.50 (216)	10.94 (278)	11.50 (292)	6.25 (159)	—	7.81 (198)	0.38 (6)	5.13 (130)	—	0.25
5	2	18.07 (459)	14.20 (361)	—	9.44 (240)	—	17.20 (437)	—	9.61 (244)		—
6	2	11.61 (295)	18.88 (480)	9.45 (240)	10.85 (276)	7.44 (189)	10.44 (265)	10.71 (272)	17.72 (450)	1.18 (30)	—

Note: Dimensions for reference, not for construction.
Contact sales office for dimensions not listed.
Dimensions are in inches (mm).

Solid State Overload

Dimensions

Dimensions "A" Frame—ESP200 Solid State Overload

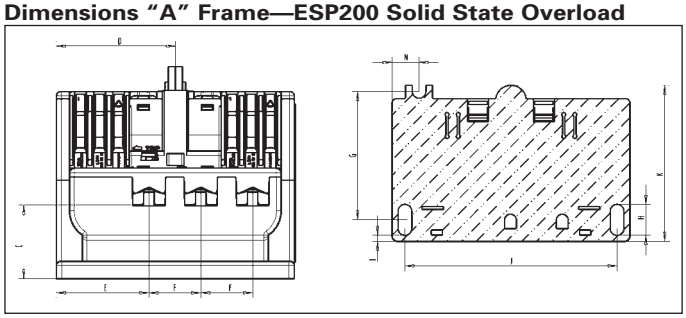

Dimensions "A1" Frame—ESP200 Solid State Overload

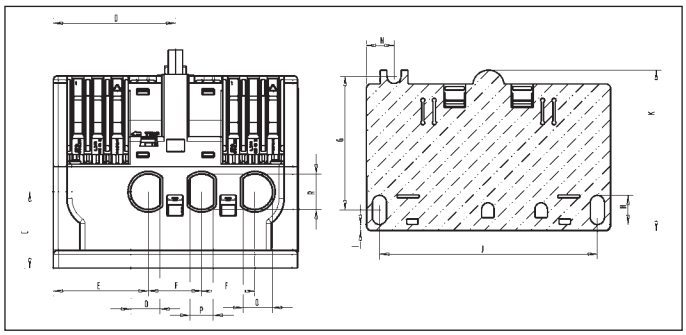

Dimensions "B" Frame—ESP200 Solid State Overload

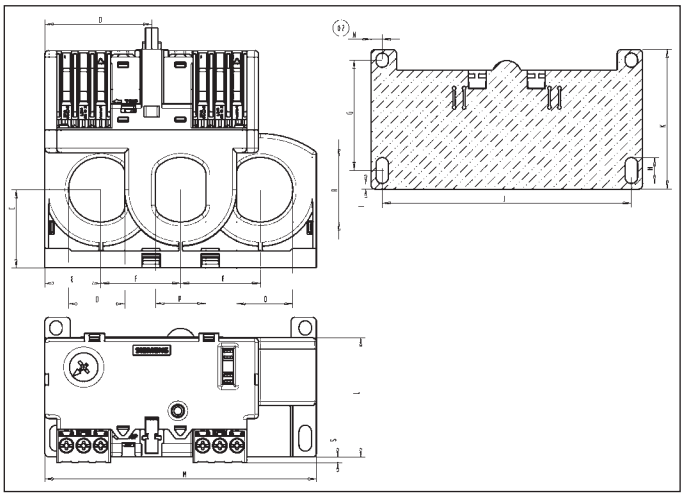

Current Transformers (all CT's have the same dimensions)

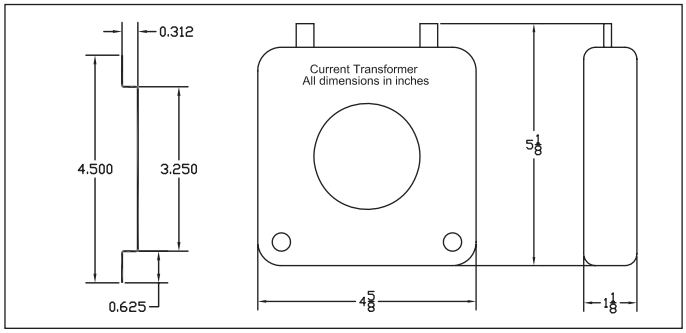

Overload (55 - 630 Amps), SIRIUS 3RB20

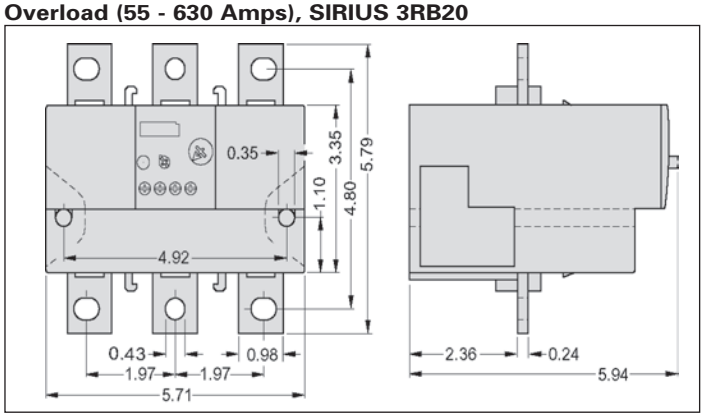

Dimensions	Frame Size A		Frame Size A1		Frame Size B	
	mm	in.	mm	in.	mm	in.
A	80	3.15	80	3.15	100.4	3.95
B	12.6	0.5	12.6	0.5	8.6	0.34
C	27.7	1.1	28	1.10	32.6	1.28
D	44.85	1.77	44.85	1.77	44.85	1.77
E	34.9	1.37	34.9	1.37	23.5	0.93
F	19.6	0.77	19.6	.077	33.5	1.32
G	48.95	1.93	48.95	1.93	46.23	1.82
H	10.7	0.42	10.7	0.42	10.9	0.43
I	2.3	0.09	2.3	0.09	2.4	0.09
J	80	3.15	80	3.15	104.6	4.12
K	53.9	2.12	53.9	2.12	58.6	2.31
L	66.0	2.6	55.9	2.20	50	1.97
M	89.7	3.53	89.7	3.53	114	4.49
N	10.18	0.40	10.18	0.40	4.7	0.19
O	—	—	10.77	0.42	23.6	0.93
P	—	—	8.62	0.34	21.1	0.83
R	—	—	12.9	0.51	27.1	1.07
S	9.5	0.37	—	—	2.45	0.1
T	5.2	0.21	5.2	0.21	5.2	0.21

Note: When mounted on a plate, torque screws to 11 lb.in. (1.2 Nm).

Panel Mounted Class 48 — Bimetal

Dimensions

Figure 1

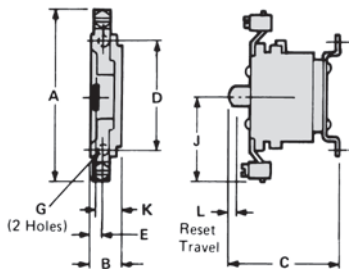

Figure 2

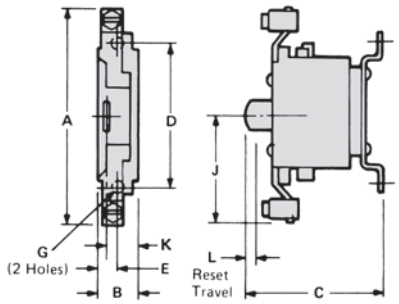

Figure 3

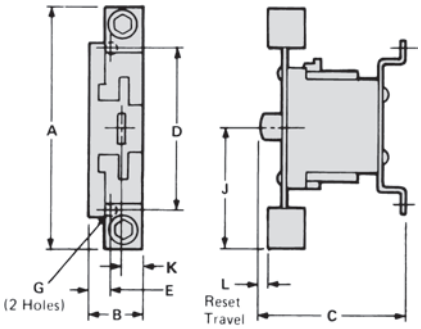

Figure 4

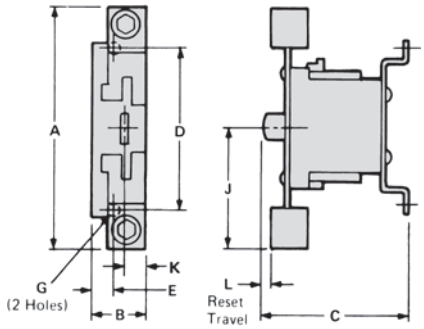

Figure 5

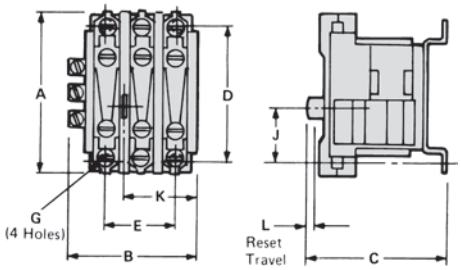

Figure 6

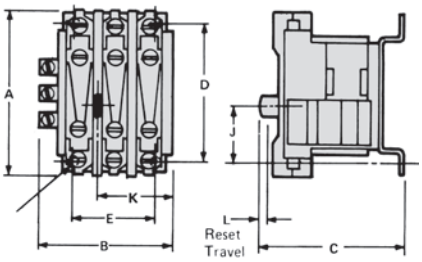

Figure 7

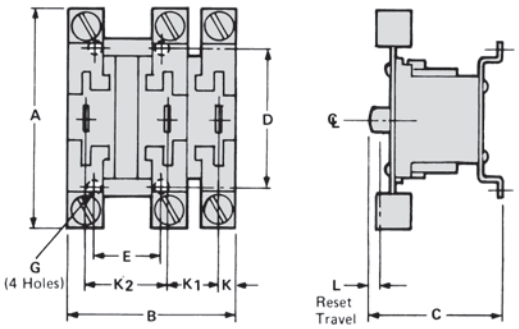

Figure 8

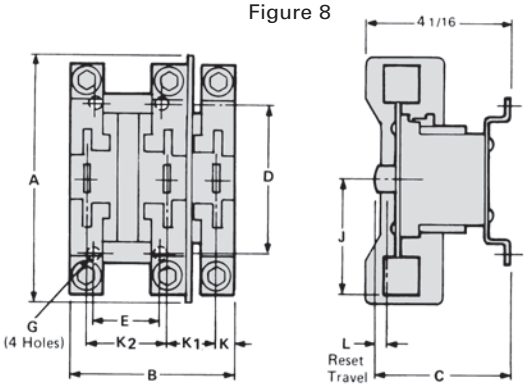

Description	Amp Rating	Fig	Outline Dimensions A	Outline Dimensions B	Outline Dimensions C	Mounting Dimensions D	Mounting Dimensions E	Reset Dimensions J	Reset Dimensions K	Reset Dimensions L	Mounting Screw G	Max Wire Size	Approx Ship Wt Lbs (Kg)	Ref Dwg
1-Pole	25	1	3½ (89)	⅞ (22)	3³⁄₁₆ (81)	3 (76)	½ (13)	1¾ (44)	¾ (19)	⅛ (3)	#10	8	2 (1)	D51820
Bimetal	60	2	4⅞ (124)	⅞ (22)	3³⁄₁₆ (81)	3 (76)	½ (13)	2⁷⁄₁₆	¾ (19)	⅛ (3)	#10	1	2 (1)	D51830
Ambient	100	3	4⅞ (124)	1¼ (32)	3⁹⁄₁₆ (90)	3½ (89)	⁹⁄₁₆ (14)	2⁷⁄₁₆	½ (13)	⅛ (3)	#10	00	3 (1)	D51833
Compensated	180	4	5¹⁵⁄₁₆ (151)	1¼ (32)	3⁹⁄₁₆ (90)	3½ (89)	⁹⁄₁₆ (14)	3 (76)	½ (13)	⅛ (3)	#10	250 MCM	4 (2)	D52206

Description	Amp Rating	Fig	Outline Dimensions A	Outline Dimensions B	Outline Dimensions C	Mounting Dimensions D	Mounting Dimensions E	Reset Dimensions J	Reset Dimensions K	Reset Dimensions K1	Reset Dimensions K2	Reset Dimensions L	Mtg Screw G	Max Wire Size	Approx Ship Wt Lbs (Kg)	Ref Dwg
3-Pole	30	5	3⅝ (92)	3¹⁄₁₆ (78)	3⅛ (79)	3 (76)	1½ (38)	1¼ (32)	1¹³⁄₁₆ (46)	—	—	³⁄₁₆ (5)	#10	8	3 (1)	D54791
Bimetal	60	6	3⅞ (98)	3¹⁄₁₆ (78)	3⅛ (79)	3 (76)	1½ (38)	1¼ (32)	1¹³⁄₁₆ (46)	—	—	³⁄₁₆ (5)	#10	2	3 (1)	D54823
Ambient	100	7	4⅞ (124)	4⁷⁄₁₆ (113)	3⁹⁄₁₆ (90)	3½ (89)	1⅝ (41)	2⁷⁄₁₆ (62)	⁹⁄₁₆ (14)	1¹⁵⁄₁₆ (49)	2 (51)	⅛ (3)	#10	00	4 (2)	D51868
Compensated	180	8	6½ (165)	4⁷⁄₁₆ (113)	3⁹⁄₁₆ (90)	3½ (89)	1⅝ (41)	3 (76)	⁹⁄₁₆ (14)	1¹⁵⁄₁₆ (49)	2 (51)	⅛ (3)	#10	250 MCM	5 (2)	D52038

Note: Dimensions for reference, not for construction.
Dimensions in inches (mm).

Class LC Open Contactors

Dimensions

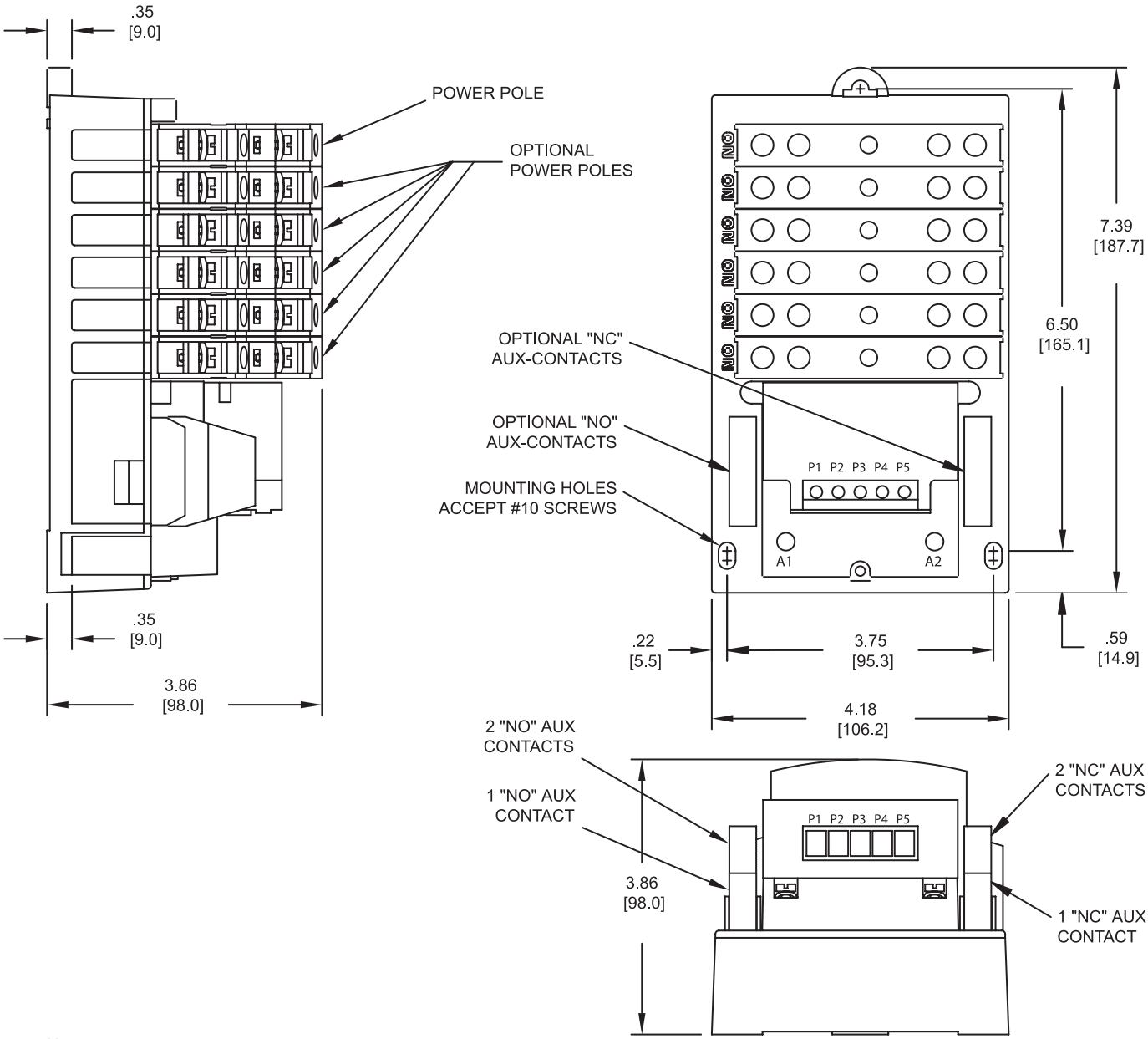

Note:

1) Mounting Dimensions remain the same for 1 to 12 Poles

2) Line and Load terminals are inter-changeable

3) Up to 2NO and 2NC auxiliary contacts can be added onto the base product

4) Same Power Pole can be configured as NO type or NC type

Open Contactors, Class LE

Dimensions

LEN00B (20A 3 Pole and 4 Pole)

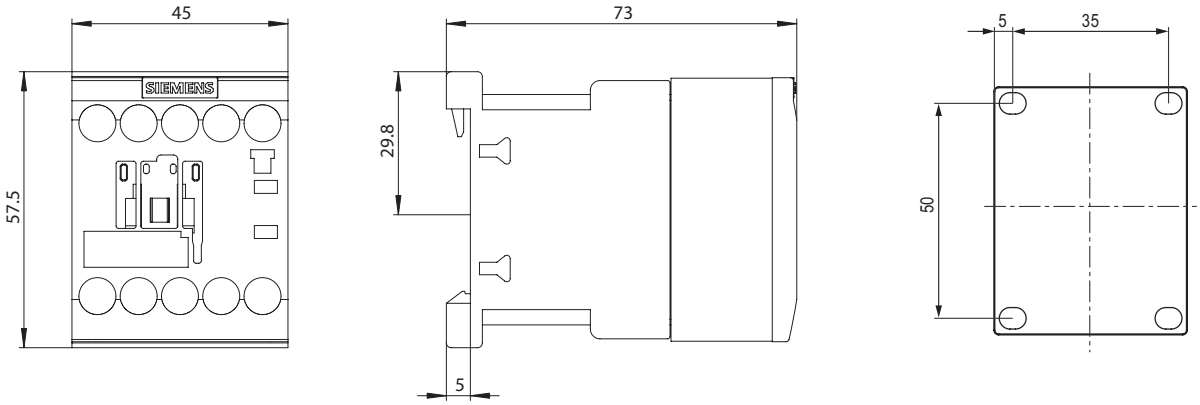

LEN00C003 (30A 3 Pole)

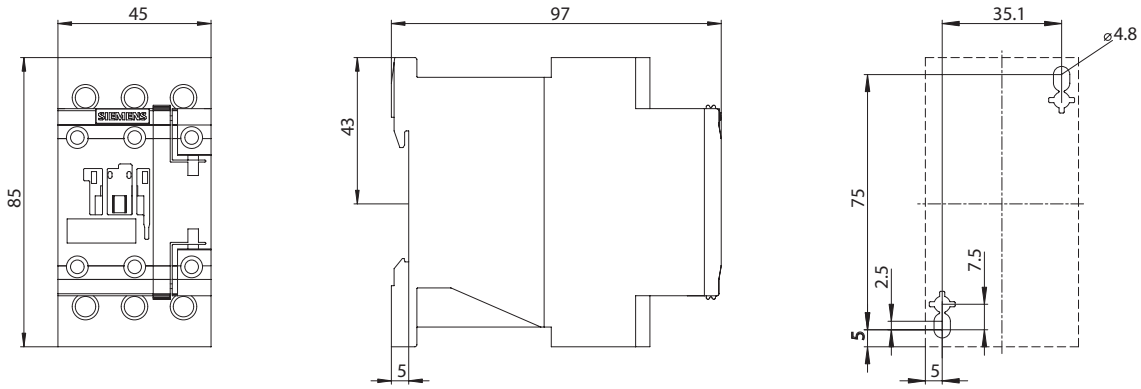

LEN00C004 (30A 4 Pole)

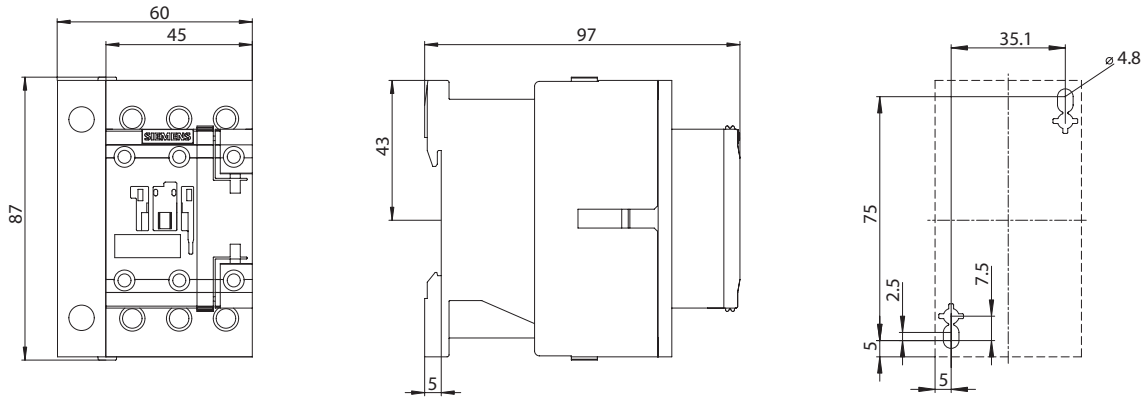

Open Contactors, Class LE

Dimensions

LEN00D003 (60A 3 Pole)

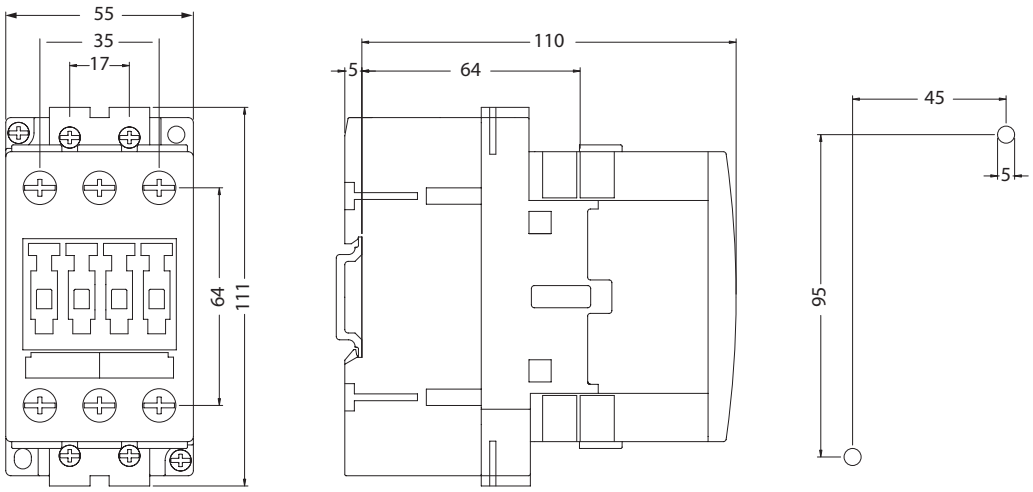

LEN00E003 (100A 3 Pole)

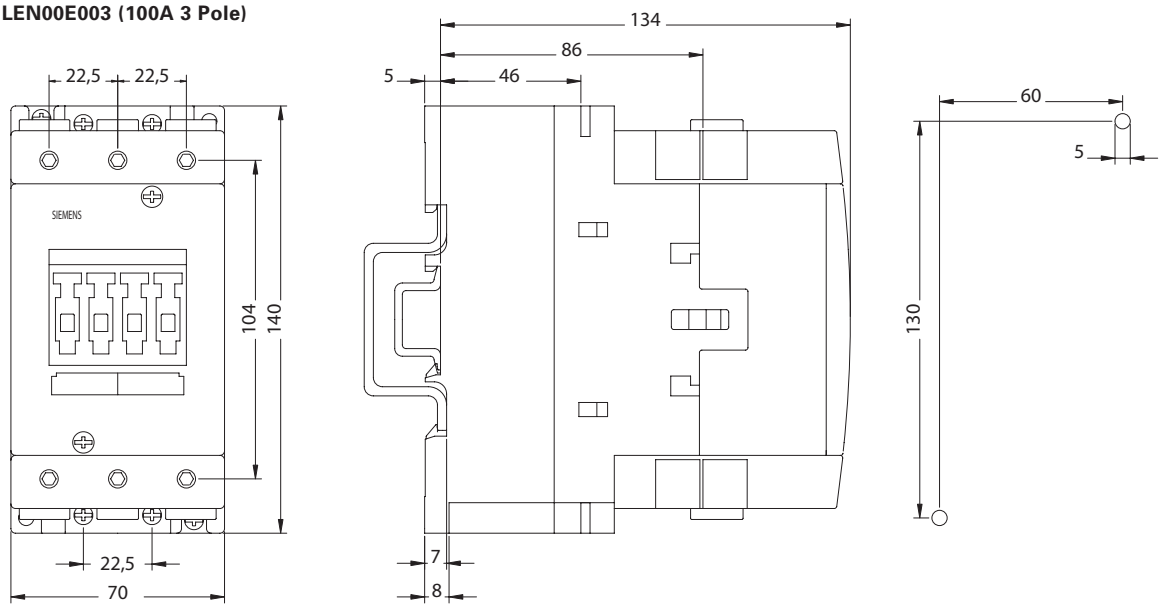

LEN00C006 (30A 6 Pole)

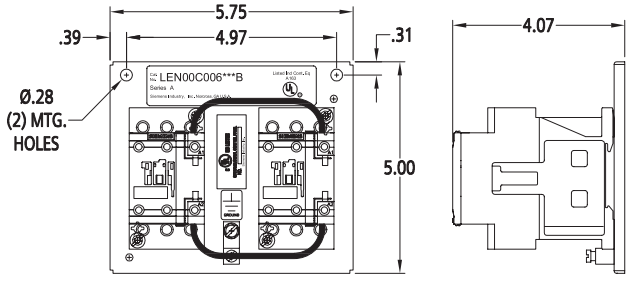

LEN00D006 (60A 6 Pole)

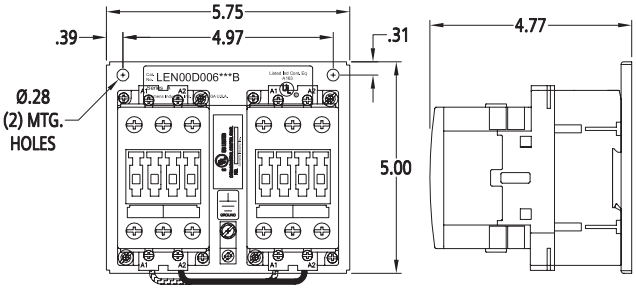

Open Contactors, Class LE

Dimensions

LEN00C009 (30A 9 Pole)

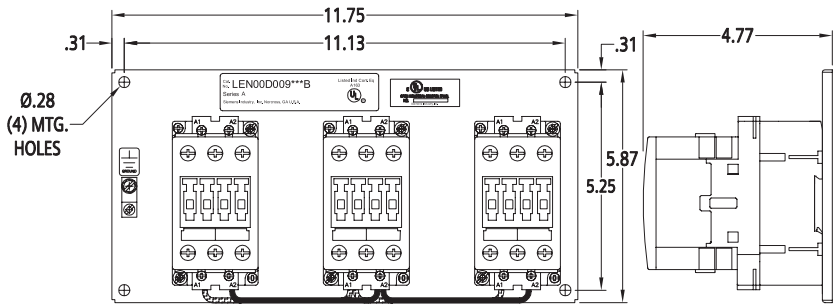

LEN00D009 (60A 9 Pole)

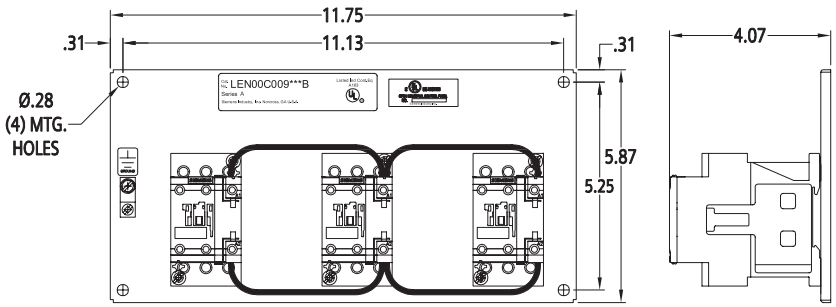

LEN00C012 (30A 12 Pole)

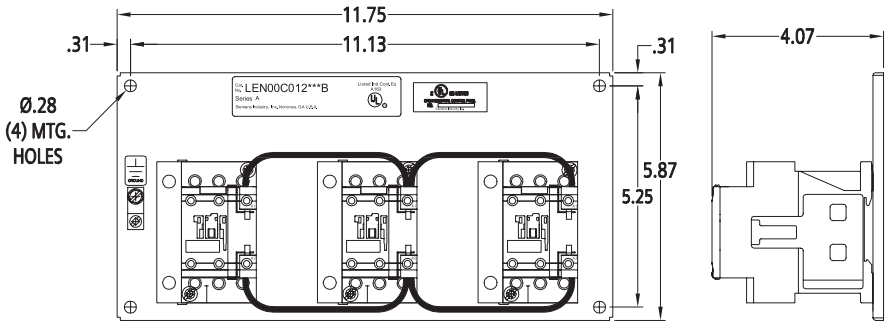

LEN00D012 (60A 12 Pole)

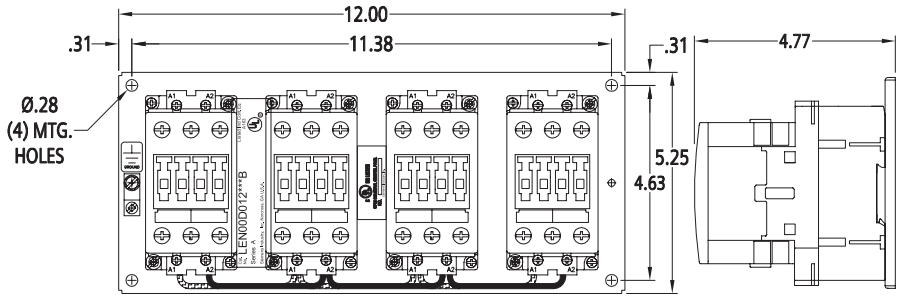

Open Contactors, Class LE

Dimensions

LEN00F003 (200A 3 Pole)

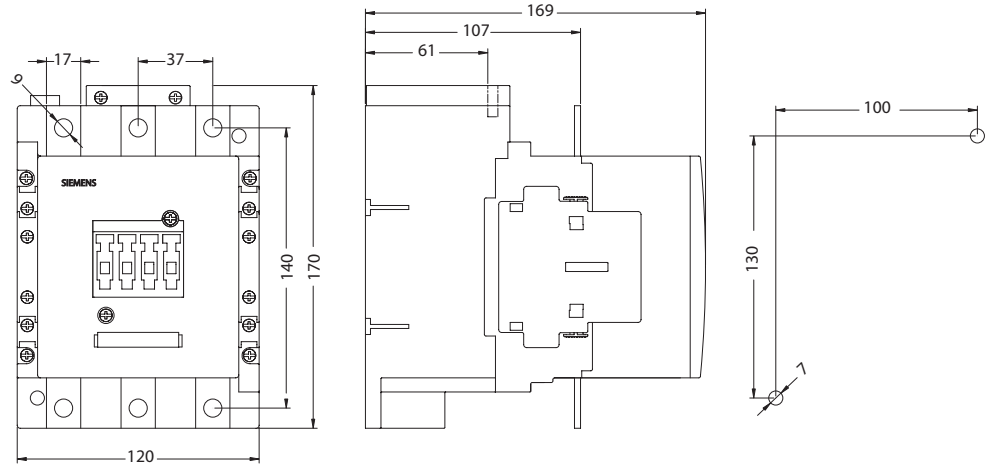

LEN00G003 (300A 3 Pole)

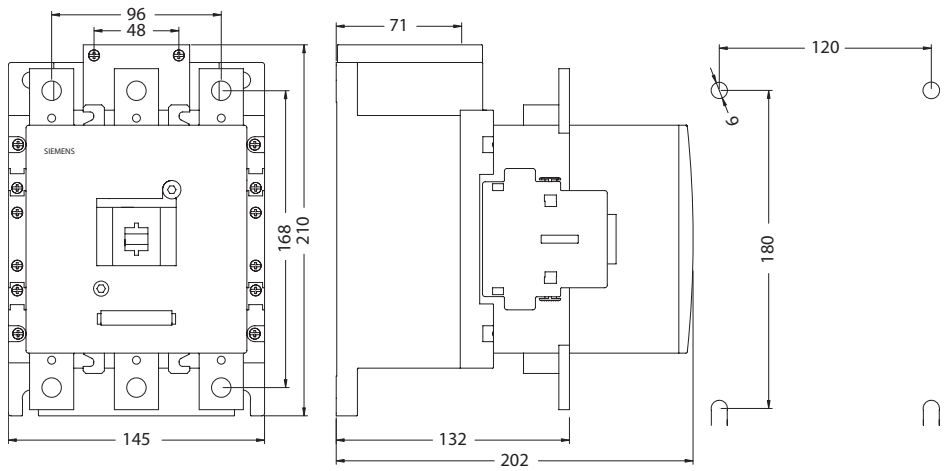

LEN00H003 (400A 3 Pole)

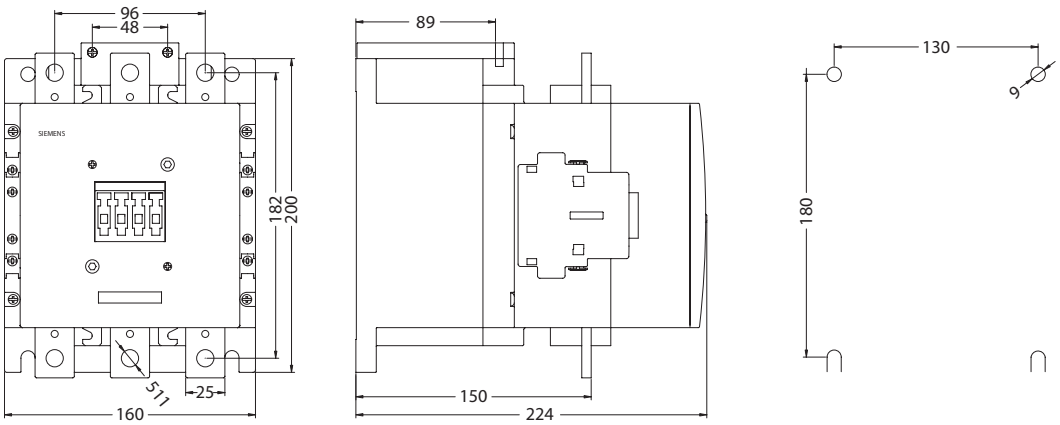

Mechanically / Magnetically Held Lighting Contactors, Class CLM

Dimensions

CLM Contactor, 20 Amp

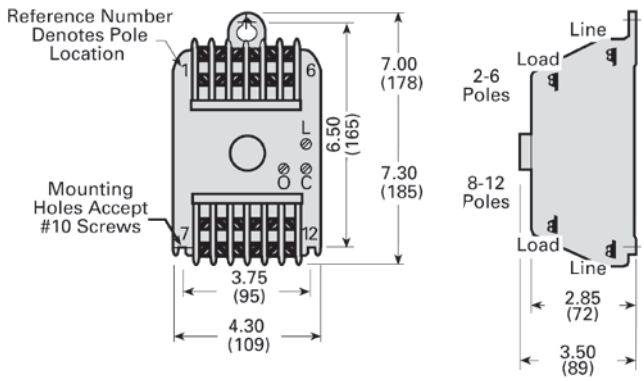

Figure 1

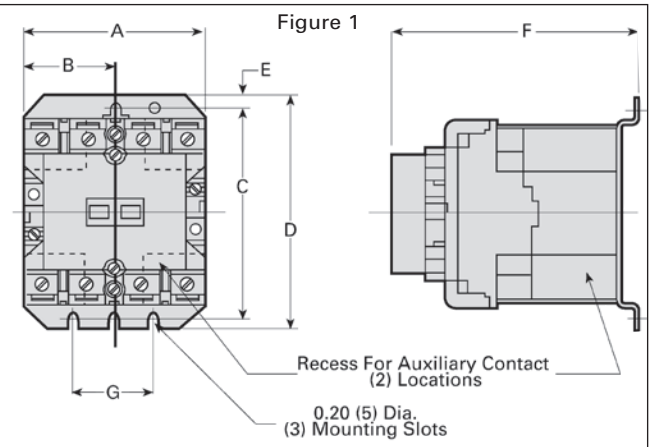

Figure 2

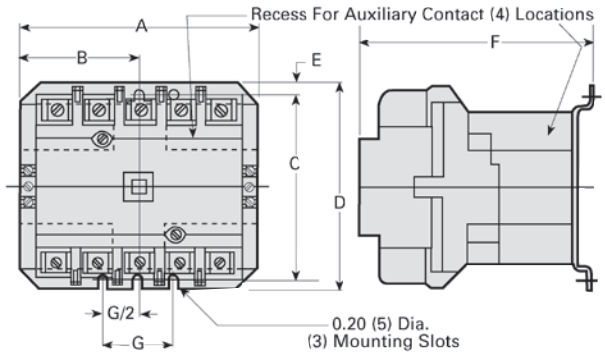

Figure 3

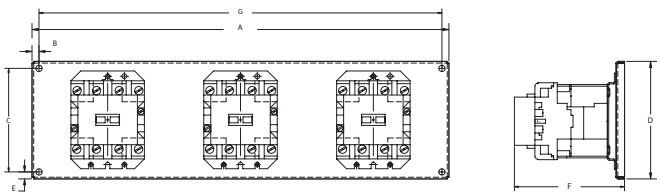

Figure is representative and may not depict the actual number of contactors mounted on the plate. There will be either 2 or 3 contactors. Furthermore, each contactor may have 3, 4 or 5 poles.

Open Type Lighting and Heating Contactors

Class	Figure Number	Amp Rating	Number of Poles	A	B	C	D	E	F	G
CLM	1	30	2–4	3.31 (84)	1.65 (42)	3.95 (100)	4.38 (111)	0.23 (6)	4.61 (117)	1.50 (38)
		30	5	4.19 (106)	2.09 (53)	3.95 (100)	4.38 (111)	0.23 (6)	4.61 (117)	1.50 (38)
	2	60	2, 3	3.31 (84)	1.65 (42)	3.95 (100)	4.38 (111)	0.23 (6)	4.94 (125)	1.50 (38)
		60	4, 5	5.06 (129)	2.53 (64)	3.95 (100)	4.38 (111)	0.23 (6)	4.94 (125)	1.50 (38)
		100	2, 3	4.62 (117)	2.31 (59)	6.00 (152)	6.62 (168)	0.38 (10)	6.75 (171)	1.88 (48)
		100	4, 5	7.25 (184)	3.62 (92)	6.00 (152)	6.62 (168)	0.38 (10)	6.75 (171)	1.88 (48)
		200	2, 3	4.62 (117)	2.31 (59)	6.00 (152)	6.62 (168)	0.38 (10)	6.75 (171)	1.88 (48)
		200	4, 5	7.25 (184)	3.62 (92)	6.00 (152)	6.62 (168)	0.38 (10)	6.75 (171)	1.88 (48)
	3	30	6, 8	8.00 (196)	0.31 (8)	5.25 (129)	5.87 (144)	0.31 (8)	4.86 (119)	7.38 (181)
		30	9, 10, 12	11.75 (289)	0.31 (8)	5.25 (129)	5.87 (144)	0.31 (8)	4.86 (119)	11.13 (273)
		60	6	8.00 (196)	0.31 (8)	5.25 (129)	5.87 (144)	0.31 (8)	5.19 (127)	7.38 (181)
		60	8, 9, 10	11.75 (289)	0.31 (8)	5.25 (129)	5.87 (144)	0.31 (8)	5.19 (127)	11.13 (273)
		60	12	16.75 (410)	0.31 (8)	5.25 (129)	5.87 (144)	0.31 (8)	5.19 (127)	16.13 (395)

Note: Dimensions for reference, not for construction.
Dimensions in inches (mm).

Mechanically Latched 300 and 400 Amps, Class CLM

Dimensions

CLM Contactors 300 Amp

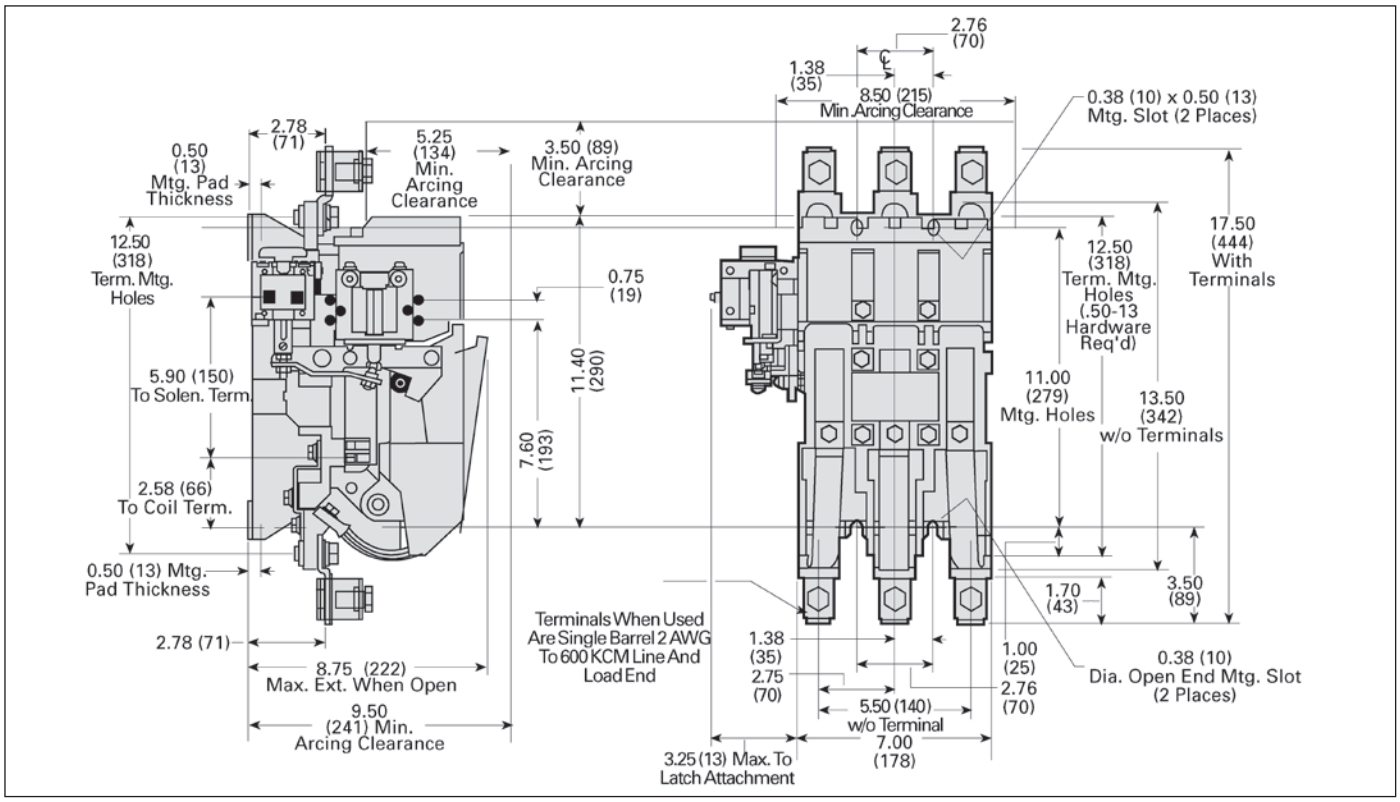

CLM Contactors 400 Amp

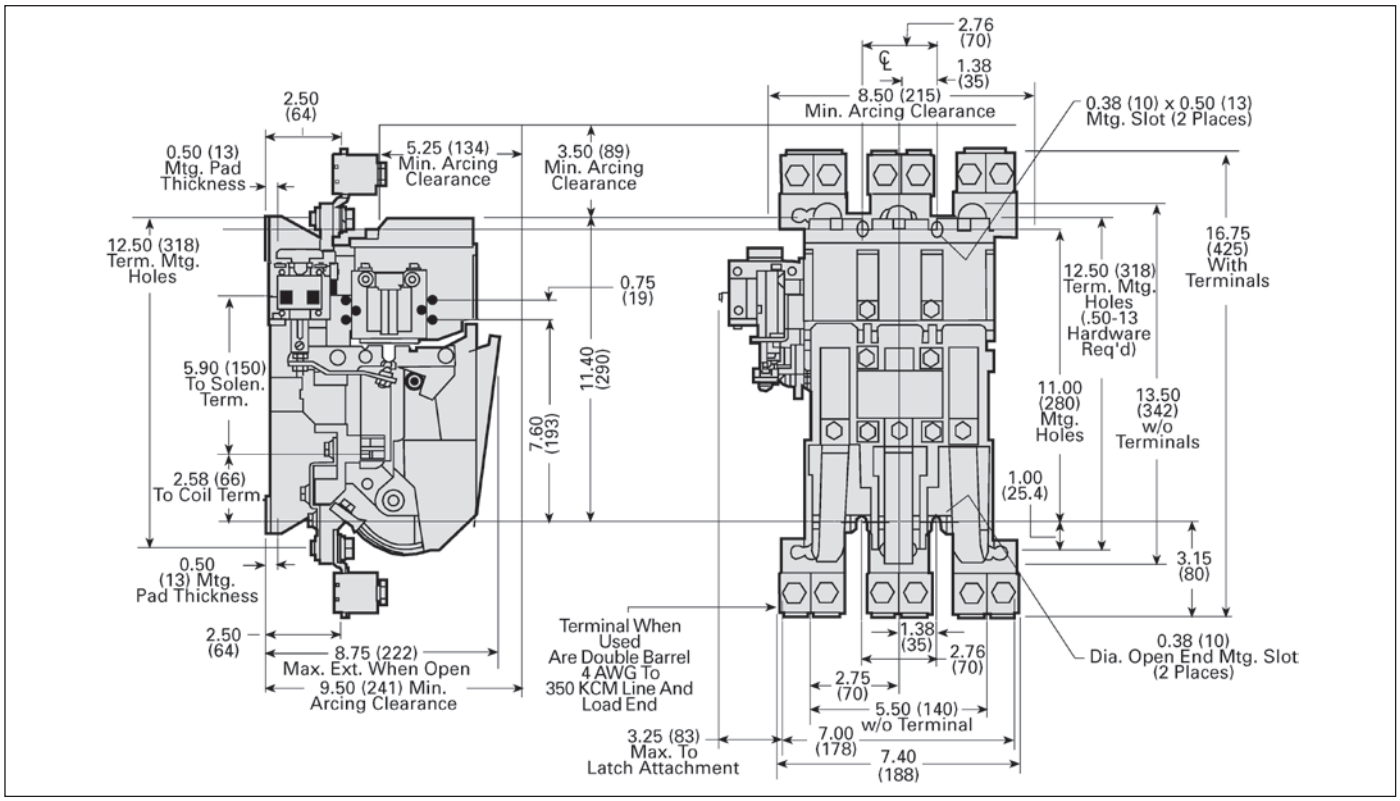

Note: Dimensions for reference, not for construction.
Dimensions in inches (mm).

For the latest CAD or PDF dimension drawings, look on our website at http://www.industry.usa.siemens.com/automation/us/en/industrial-controls/products/control-circuit-components/control-power-transformers/Pages/dimensional-drawings.aspx

For the latest CAD or PDF dimension drawings, look on our website at http://www.industry.usa.siemens.com/automation/us/en/industrial-controls/products/control-circuit-components/control-power-transformers/Pages/dimensional-drawings.aspx

Enclosed, Class 14, 40

Dimensions

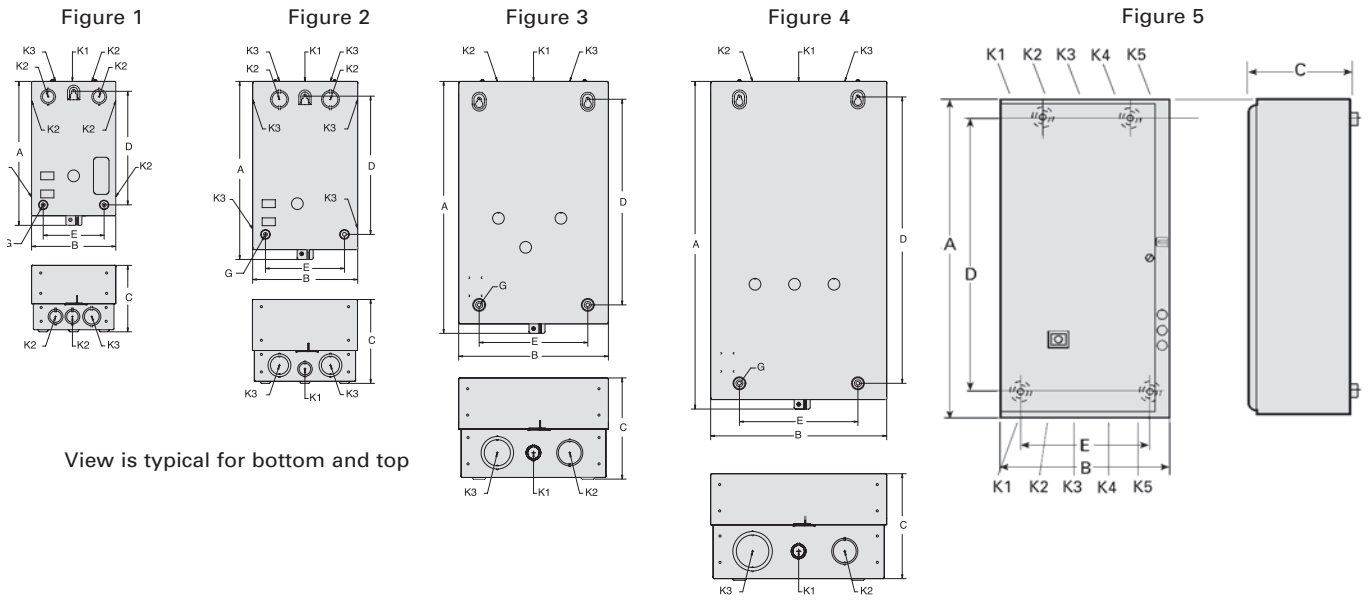

NEMA 1 General Purpose Enclosure (Standard width for use with or without CPT)①

Size	Max CPT Size	Figure	Outline Dimensions A	Outline Dimensions B	Outline Dimensions C	Mounting Dimensions D	Mounting Dimensions E	Mounting Screw G	Conduit Size K1	Conduit Size K2	Conduit Size K3	Conduit Size K4	Conduit Size K5	Approx Ship Wt Lbs (Kg)	Ref Dwg
00–1¾	w/o CPT	1	10 31/32 (279)	6 13/32 (163)	5 1/32 (128)	8 7/32 (209)	4⅝ (117)	¼	½	½–¾	¾–1	—	—	10 (5)	D68870
2–2½	w/o CPT	2	13 17/32 (344)	7 31/32 (202)	6⅜ (162)	10¼ (260)	6 (152)	¼	½–¾	¾–1	1–1¼	—	—	15 (7)	D68870
3–3½	(100VA)	3	19⅛ (486)	11⅜ (289)	7 11/16 (195)	15⅝ (397)	8¼ (210)	¼	½–¾	1–1¼	1½–2	—	—	26 (12)	D68870
4	(300VA)	4	24⅞ (632)	13⅜ (340)	8⅛ (206)	21¾ (552)	9 (229)	¼	½–¾	1¼–1½	2–2½	—	—	37 (17)	D68870
5	(300VA)	5	40 (1016)	20 (508)	11 (279)	37⅝ (956)	15¼ (387)	¼	2–3	1¼–1½	½–¾	1¼–1½	2–3	135 (36)	D65608
6, 7	(300VA)	5	48 (1219)	20 (508)	12½ (317)	45 5/16 (1148)	10 (254)	¼	2–2½	1¼–1½	½–¾	1¼–1½	2–2½	150 (44)	D65608013
8		5	79 (2010)	22 (559)	13 (330)	78 (1981)	18 (457)							275 (125)	D56032006

NEMA 1 General Purpose Enclosure (Extra wide for use with CPT)①

Size	Max CPT Size	Figure	Outline Dimensions A	Outline Dimensions B	Outline Dimensions C	Mounting Dimensions D	Mounting Dimensions E	Mounting Screw G	Conduit Size K1	Conduit Size K2	Conduit Size K3	Conduit Size K4	Conduit Size K5	Approx Ship Wt Lbs (Kg)	Ref Dwg
00–1¾	(200VA)	3	19⅛ (486)	11⅜ (289)	7 11/16 (195)	15⅝ (397)	8¼ (210)	¼	½–¾	1–1¼	1½–2	—	—	26 (12)	D68870
2–2½	(200VA)	3	19⅛ (486)	11⅜ (289)	7 11/16 (195)	15⅝ (397)	8¼ (210)	¼	½–¾	1–1¼	1½–2	—	—	26 (12)	D68870
3–3½	(250VA)	4	24⅛ (632)	13⅜ (340)	8⅛ (206)	21¾ (552)	9 (229)	¼	½–¾	1–1¼–1½	2–2½	—	—	37 (17)	D68870

Note: Dimensions in inches (millimeters). Dimensions for reference, not for construction. Contact Sales Office for dimensions not listed.

① Clamshell enclosure Size 00 - 4; Standard width and Extra wide.

Enclosed, Class 14, 40

Dimensions

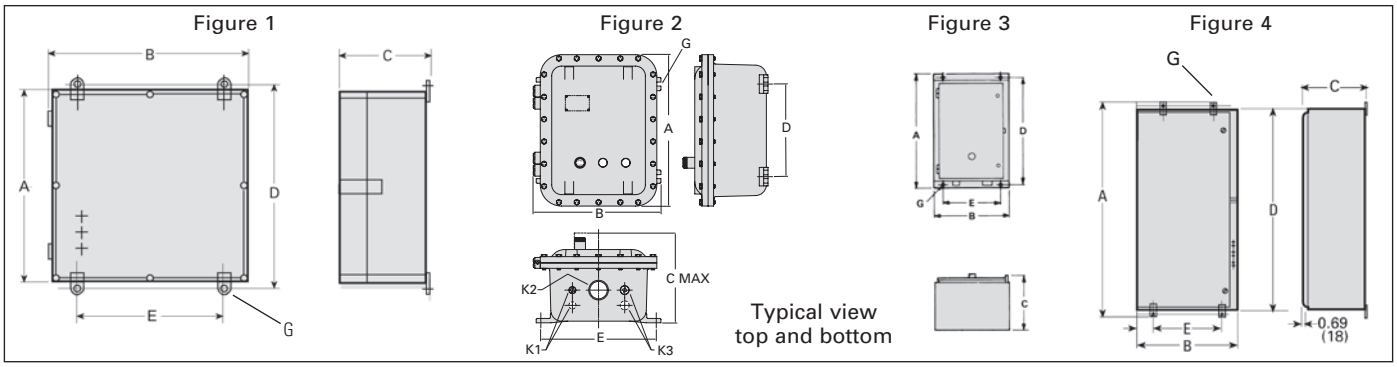

NEMA 4X Fiberglass Enclosures (Standard width for use with or without CPT)

Size	Figure	Outline Dimensions A	B	C	Mounting Dimensions D	E	Mtg Screw G	Conduit Size K1	K2	K3	Approx Ship Wt Lbs (Kg)	Ref Dwg
0–2½	1	14.620 (371)	11.880 (302)	6.890 (175)	15.000 (381)	9.750 (248)	¼	—	—	—	11 (4.9)	24-139-861-001
3–4	1	23.780 (604)	23.780 (604)	6.890 (175)	24.125 (612.7)	21.250 (539.7)	¼	—	—	—	28 (12.7)	24-139-861-003

NEMA 7/9/3/4 Hazardous Location Enclosure (Standard width for use with or without CPT)

Size	Figure	Outline Dimensions A	B	C	Mounting Dimensions D	E	Mtg Screw G	Conduit Size K1	K2	K3	Approx Ship Wt Lbs (Kg)	Ref Dwg
0–1¾ w/o CPT	2	15.250 (387)	10.688 (272)	10.000 (254)	8.500 (216)	9.125 (132)	⅜	½	1½	¾	33 (14.9)	24-139-865-002
2–2½ (0–1¾ w/ CPT)	2	17.750 (451)	14.688 (373)	10.375 (264)	10.625 (270)	13.250 (337)	⅜	½	2	¾	60 (27.0)	24-139-865-003
3	2	17.750 (451)	14.688 (373)	10.375 (264)	10.625 (270)	13.250 (337)	⅜	½	2	¾	60 (27.0)	24-139-865-003
3½–4	2	28.688 (729)	17.750 (451)	11.750 (298)	18.375 (467)	15.750 (400)	½	½	3	¾	140 (63.5)	24-139-865-004
5	2	48.875 (1038)	22.875 (581)	14 7/8 (377)	29 (373)	21⅝ (533)	⅝	½	3	¾	352 (159)	24-139-865-006

NEMA 7/9/3/4 Hazardous Location Enclosure (Extra wide for use with CPT)

Size	Figure	Outline Dimensions A	B	C	Mounting Dimensions D	E	Mtg Screw G	Conduit Size K1	K2	K3	Approx Ship Wt Lbs (Kg)	Ref Dwg
0–2½ ①	2	17.750 (451)	14.688 (373)	10.375 (264)	10.625 (270)	13.250 (337)	⅜	½	2	¾	60 (27.0)	24-139-865-003

NEMA 12/3/3R Industrial Use Enclosure (Standard width for use without CPT)

Size	Figure	Outline Dimensions A	B	C	Mounting Dimensions D	E	Mtg Screw G	Conduit Size K1	K2	K3	Approx Ship Wt Lbs (Kg)	Ref Dwg
0–1¾	3	13.000 (330)	7.750 (197)	5.438 (138)	12.250 (311)	5.000 (127)	¼	—	—	—	12 (5)	D41547
2–2½	3	16.000 (406)	8.125 (206)	6.063 (154)	15.250 (387)	5.000 (127)	¼	—	—	—	18 (8)	D41547
3–4	3	26.000 (660)	13.125 (333)	7.563 (192)	25.250 (641)	10.000 (254)	¼	—	—	—	49 (22)	D41552

NEMA 12/3/3R Industrial Use Enclosure (Extra wide for use with CPT)

Size	Figure	Outline Dimensions A	B	C	Mounting Dimensions D	E	Mtg Screw G	Conduit Size K1	K2	K3	Approx Ship Wt Lbs (Kg)	Ref Dwg
0–1¾	3	13.000 (330)	12.625 (321)	5.375 (137)	12.250 (311)	10.000 (254)	¼	—	—	—	30 (14)	D17150
2–2 ½	3	16.000 (406)	13.250 (337)	6.125 (156)	15.250 (387)	11.000 (279)	¼	—	—	—	33 (15)	D17150
3–3 ½	3	26.000 (660)	13.125 (333)	7.563 (192)	25.250 (641)	10.000 (254)	¼	—	—	—	49 (22)	D41552
4	3	29.063 (738)	23.188 (589)	9.250 (235)	27.563 (700)	20.000 (508)	⅜	—	—	—	64 (29)	D17150
5	4	40.000 (1016)	20.000 (508)	11.000 (279)	41.000 (1041)	10.000 (254)	⅜	—	—	—		D65608007
6, 7	4	48.000 (1219)	20.000 (508)	12.500 (317)	49.000 (1244)	10.000 (254)	⅜	—	—	—		D65608009
8	5	79.000 (2010)	22.000 (559)	13.000 (330)	78.000 (1981)	18.000 (457)	⅜	—	—	—	275 (125)	D65632006

NEMA 4/4X Stainless Steel Enclosure (Standard width for use without CPT)

Size	Figure	Outline Dimensions A	B	C	Mounting Dimensions D	E	Mtg Screw G	Conduit Size K1	K2	K3	Approx Ship Wt Lbs (Kg)	Ref Dwg
0–1¾	3	13.000 (330)	7.750 (197)	5.438 (138)	12.250 (311)	5.000 (127)	¼	—	—	—	17.5 (8)	D41546
2–2½	3	16.000 (406)	8.125 (206)	6.063 (154)	15.250 (387)	5.000 (127)	¼	—	—	—	36 (16)	D41546
3–4	3	26.000 (660)	13.125 (333)	7.563 (192)	25.250 (641)	10.000 (254)	¼	—	—	—	67 (30)	D41551

NEMA 4/4X Stainless Steel Enclosure (Extra wide for use with CPT)

Size	Figure	Outline Dimensions A	B	C	Mounting Dimensions D	E	Mtg Screw G	Conduit Size K1	K2	K3	Approx Ship Wt Lbs (Kg)	Ref Dwg
0–1¾	3	13.000 (330)	12.625 (321)	5.375 (137)	12.250 (311)	10.000 (254)	¼	—	—	—	30 (14)	D41917
2–2½	3	16.000 (406)	13.250 (337)	6.000 (152)	15.250 (387)	11.000 (279)	¼	—	—	—	33 (15)	D42935
3–3½	3	26.000 (660)	18.000 (457)	7.563 (192)	25.250 (641)	10.000 (254)	¼	—	—	—	67 (30)	D41551
4	3	29.000 (737)	23.188 (589)	9.250 (235)	27.500 (699)	20.000 (508)	5/16	—	—	—	64 (29)	D43292
5 (Painted)	4	40.000 (1016)	20.000 (508)	11.000 (279)	41.000 (1041)	10.000 (254)	⅜	—	—	—		D65608007
6, 7 (Painted)	4	48.000 (1219)	20.000 (508)	12.500 (317)	49.000 (1244)	10.000 (254)	⅜	—	—	—		D65608009
8 (Painted)	5	79.000 (2010)	22.000 (559)	13.000 (330)	78.000 (1981)	18.000 (457)	⅜	—	—	—	275 (125)	D65632006

Note: Dimensions in inches (millimeters). Dimensions for reference, not for construction. Contact Sales Office for dimensions not listed.

① Used for addition of only CPT on size 2½. If pilot devices are needed, use size 3-3½ enclosure.

Enclosed, Class 17, 18

Dimensions

Figure 1

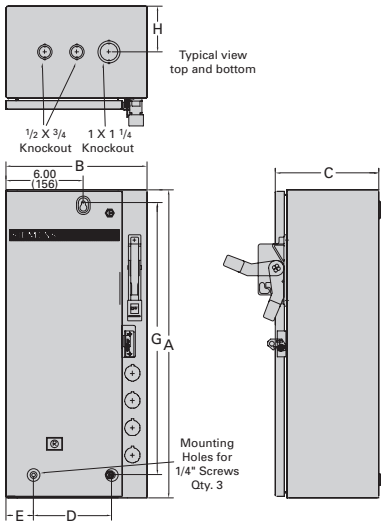

Figure 2

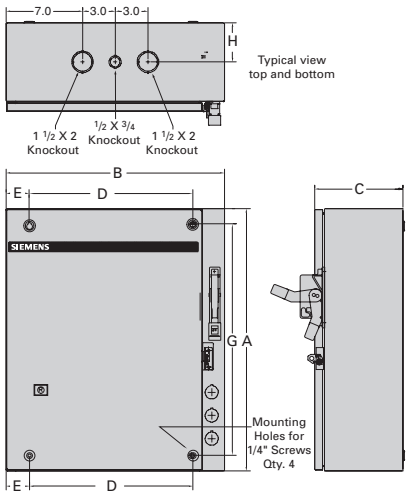

Figure 3

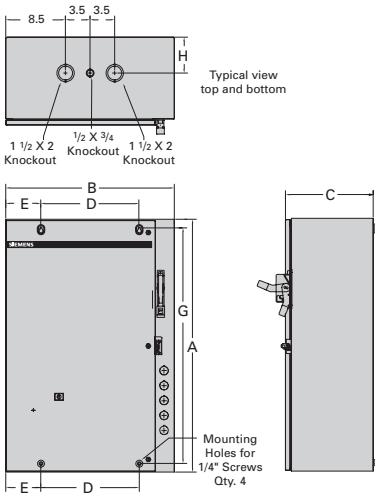

Figure 4

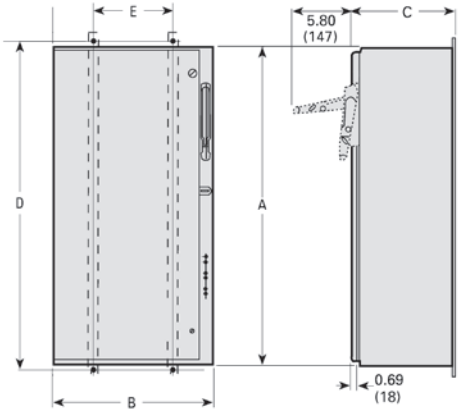

NEMA 1 Standard Width 0–6

Size	Figure	Outline Dimensions A	B	C	Mounting Dimensions D	E	G	H	Approx Ship Wt Lbs (Kg)	Ref Dwg
0–2	1	24 (610)	11 (279)	8 (203)	6.125 (156)	2.125 (54)	21.00 (533)	3.50 (90)	35 (16)	D68774001
2 1/2, 3 (except 200A Disc)	2	24 (610)	20 (508)	8 (203)	15.00 (381)	2.125 (54)	21.00 (533)	3.50 (90)	48 (22)	D68774002
3 (200A Disc.), 3 1/2, 4	3	36 (914)	24 (610)	8 (203)	14.00 (356)	5.00 (127)	33.50 (851)	5.00 (127)	101 (46)	D68774003
5	4	72.156 (1833)	20 (508)	11.031 (280)	71 (1803)	16 (406)	—	—	250 (113)	D56032005
6	4	79.125 (2010)	22 (559)	13 (330)	78 (1981)	18 (457)	—	—	275 (125)	D56032006

NEMA 1 Extra Wide 0–3

Size	Figure	Outline Dimensions A	B	C	Mounting Dimensions D	E	G	H	Approx Ship Wt Lbs (Kg)	Ref Dwg
0–2	2	24 (610)	20 (508)	8 (203)	15.00 (381)	2.125 (54)	21.00 (533)	3.50 (90)	48 (22)	D68774002
2½.3	3	36 (914)	24 (610)	8 (203)	14.00 (356)	5.00 (127)	33.50 (851)	5.00 (127)	101 (46)	D68774003

Enclosed, Class 17, 18

Dimensions

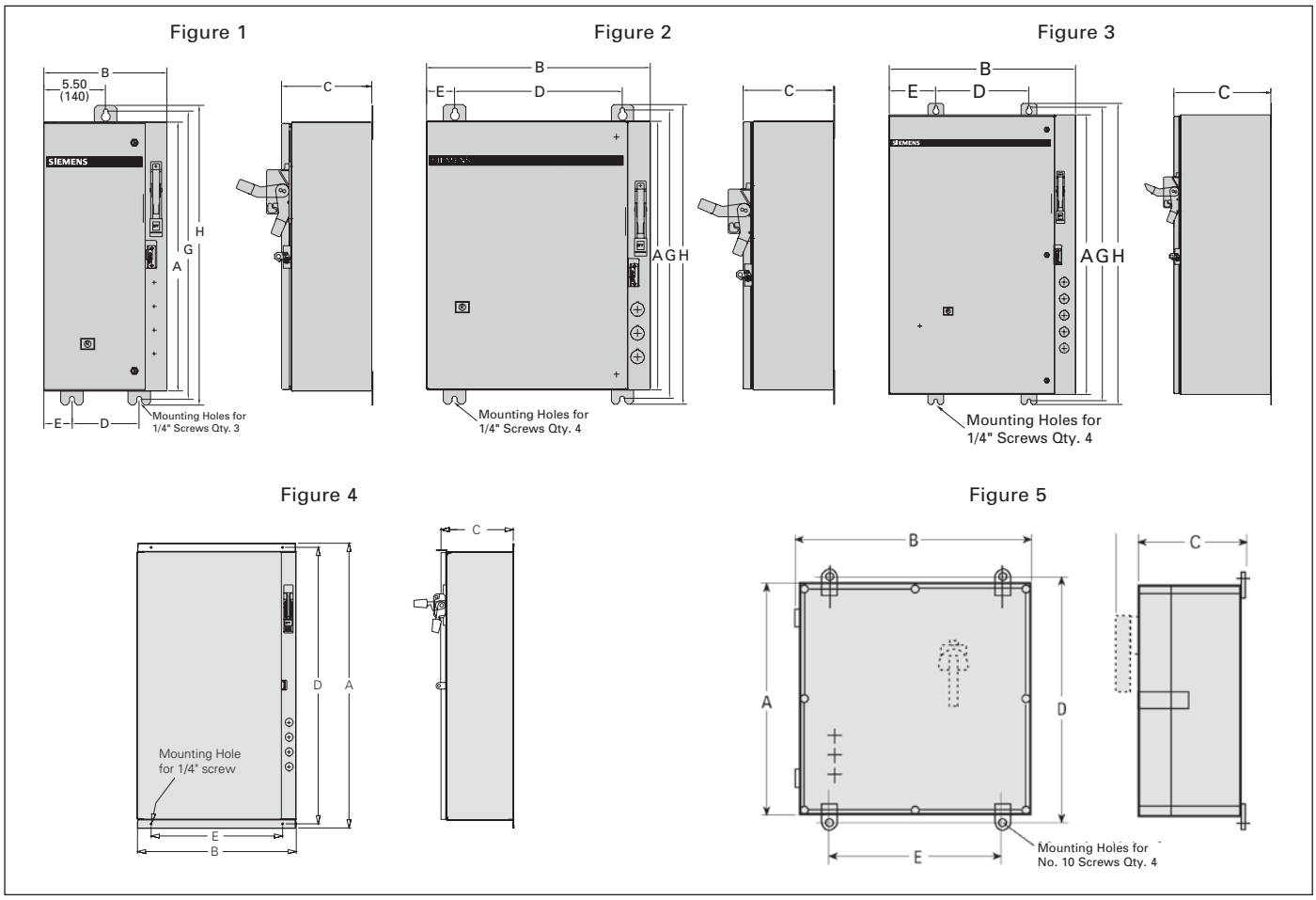

NEMA 12/3/3R/4 (Painted), 4/4X (Stainless) Standard Width 0–6

Size	Figure	Outline Dimensions			Mounting Dimensions				Approx Ship Wt Lbs (Kg)	Ref Dwg
		A	B	C	D	E	G	H		
0–2	1	24 (610)	11 (279)	8 (203)	6.00 (152)	2.50 (64)	25.75 (654)	26.75 (680)	35 (16)	D56033
2 1/2, 3 (except 200A Disc)	2	24 (610)	20 (508)	8 (203)	15.00 (381)	2.50 (64)	25.75 (654)	26.75 (680)	48 (22)	D56033
3 (200A Disc.), 3 1/2, 4	3	36 (914)	24 (610)	8 (203)	12 (305)	6.00 (152)	37.75 (959)	38.75 (984)	101 (46)	D56033
5 (Painted)	4	72.156 (1833)	20 (508)	11.031 (280)	71 (1830)	16 (406)	—	—	250 (113)	D56032005
6 (Painted)	4	79.125 (2010)	22 (559)	13 (330)	78 (1981)	18 (457)	—	—	275 (125)	D56032006

NEMA 12/3/3R/4 (Painted), 4/4X (Stainless) Extra Wide 0–3

Size	Figure	Outline Dimensions			Mounting Dimensions				Approx Ship Wt Lbs (Kg)	Ref Dwg
		A	B	C	D	E	G	H		
0–2	2	24 (610)	20 (508)	8 (203)	15.00 (381)	2.50 (64)	25.75 (654)	26.75 (654)	49 (22)	D56033
2½, 3	3	36 (914)	24 (610)	8 (203)	12.00 (305)	6.00 (152)	37.75 (959)	38.75 (984)	102 (46)	D56033

NEMA 4X Fiberglass Standard Width 0–4

Size	Figure	Outline Dimensions			Mounting Dimensions				Approx Ship Wt Lbs (Kg)	Ref Dwg
		A	B	C	D	E	G	H		
0–1¾	5	23.75 (603)	14.62 (371)	7.12 (181)	24.09 (612)	12.20 (310)	—	—	42 (19)	—
2–3½	5	23.75 (603)	23.75 (603)	8.50 (216)	24.06 (611)	21.30 (541)	—	—	44 (20)	—
4	5	39.37 (1000)	29.52 (750)	12.20 (310)	40.94 (1040)	27.95 (710)	—	—	55 (25)	—

Note: Dimensions in inches (mm).
Dimensions for reference, not for construction.
Contact sales office for dimensions not listed.

Figure 1

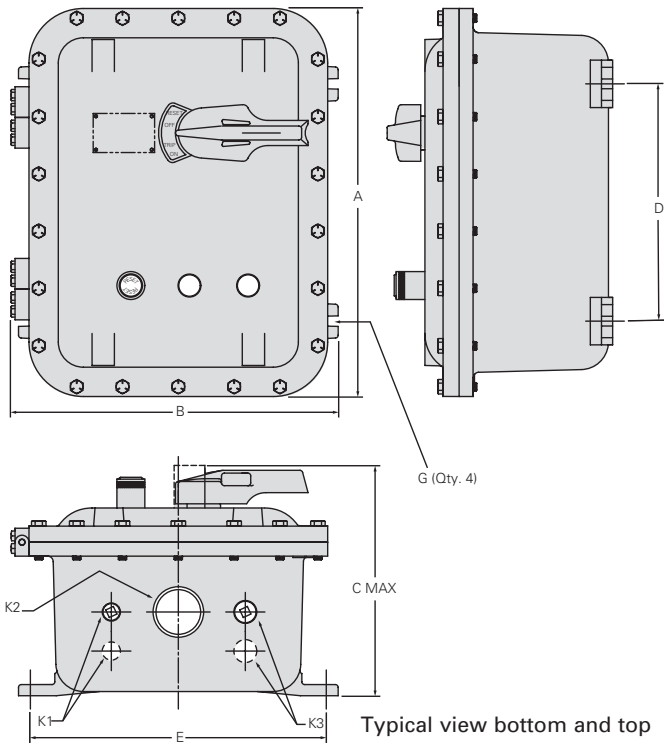

Typical view bottom and top

NEMA 7 & 9, 3, 4 Standard Width 0–4

Size	Figure	Outline Dimensions			Mounting Dimensions		Mounting Screw	Conduit Size			Approx Ship Wt Lbs (Kg)	Ref Dwg
		A	B	C	D	E	G	K1	K2	K3		
0–1¾	1	17.38 (441)	14.69 (373)	10.38 (264)	10.63 (270)	13.25 (337)	⅜	¾	2	½	60 (27)	24-139-865-003
2–3½	1	28.25 (718)	17.75 (451)	11.19 (284)	18.38 (467)	15.75 (400)	⅜	¾	2½	½	160 (72)	24-139-865-004
4	1	32.25 (819)	20.00 (508)	11.50 (292)	22.50 (572)	17.75 (451)	⅝	¾	2½	½	250 (113)	24-139-865-005
5	1	40.875 (1038)	22.875 (581)	14.875 (378)	29 (737)	21.75 (552)	⅝	½	3	¾	360 (163)	—

Note: Dimensions in inches (mm). Dimensions for reference, not for construction. Contact Sales Office for dimensions not listed.

Enclosed, Class 22, 43

Dimensions

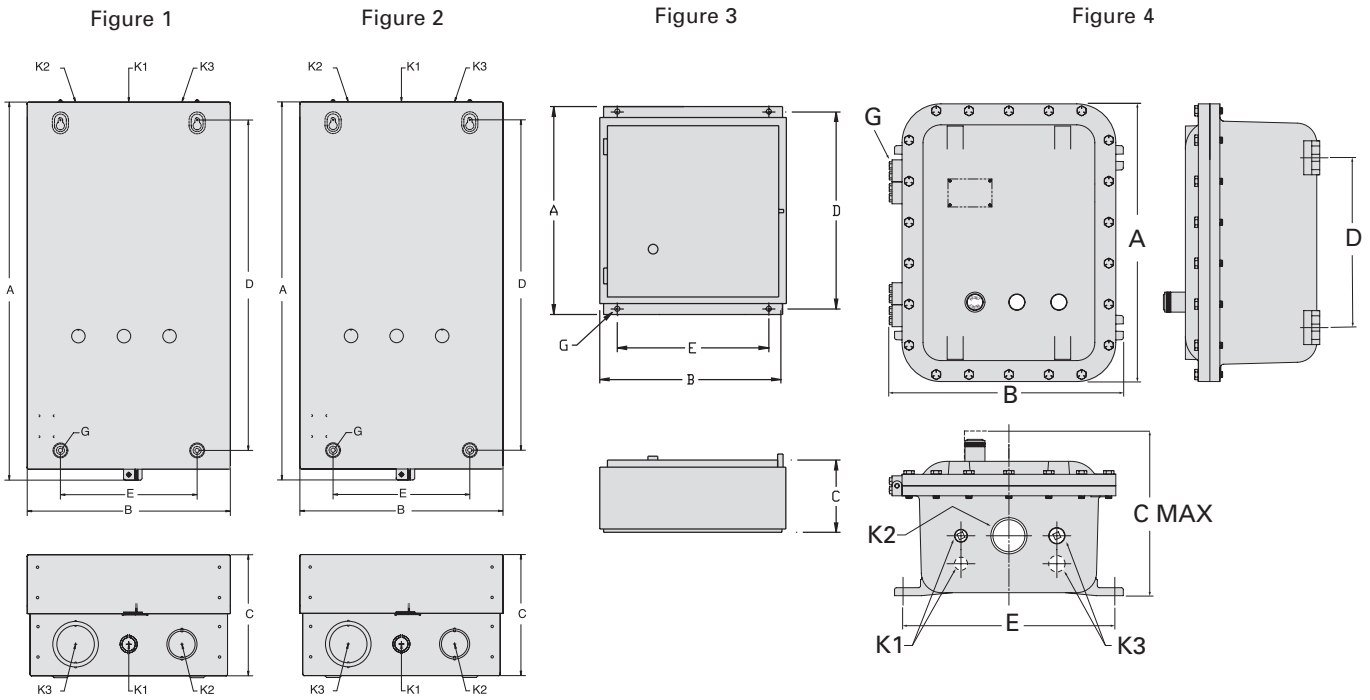

View is typical for bottom and top

NEMA 1 General Purpose Enclosure (Standard width for use with and without CPT)

Size	Figure	Outline Dimensions			Mounting Dimensions		Mounting Screw	Conduit Size				Approx Ship Wt Lbs (Kg)	Ref Dwg
		A	B	C	D	E	G	K1	K2	K3	K4		
00–2½ (200 VA)	1	19⅛ (486)	11⅜ (289)	7 11/16 (195)	15⅝ (397)	8¼ (210)	¼	½–¾	1–1¼	1½–2	—	30 (14)	D68870
3–4 (300 VA)	2	24⅞ (632)	13⅜ (340)	8⅛ (206)	21¾ (552)	9 (229)	¼	½–¾	1¼–1½	2–2½	—	52 (24)	D68870
5 (300 VA)		40 (1016)	20 (508)	11 (279)	37⅝ (956)	15¼ (387)	¼	2–3	1¼–1½	½–¾	1¼–1½	135 (36)	D65608
6, 7 (300 VA)		48 (1219)	20 (508)	12½ (317)	45 3/16 (1148)	10 (254)	¼	2–2½	1¼–1½	½–¾	1¼–1½	150 (44)	D65608013

NEMA 4/4X Stainless Steel Enclosure (with or without CPT)

Size	Figure	Outline Dimensions			Mounting Dimensions		Mtg Screw	Conduit Size			Approx Ship Wt Lbs (Kg)	Ref Dwg
		A	B	C	D	E	G	K1	K2	K3		
0–1¾	3	13 (330)	12⅝ (321)	5⅜ (137)	12¼ (311)	10 (254)	¼	—	—	—	30 (14)	D41917
2–2½	3	16 (406)	13¼ (337)	6 (152)	15¼ (387)	11 (279)	¼	—	—	—	33 (15)	D42935
3–3½ (w/o CPT)	3	25 1/16 (637)	17 9/16 (437)	7⅜ (187)	24 5/16 (618)	14 (356)	¼	—	—	—	53 (24)	D17423
3–3½ (w/ CPT)	3	29 (737)	23 3/16 (589)	9¼ (235)	27½ (699)	20 (508)	5/16	—	—	—	64 (29)	D43292
4												
5 (Painted)		40 (1016)	20 (508)	11 (279)	41 (1041)	10 (254)	⅜	—	—	—		D65608007
6, 7 (Painted)		48(1219)	20 (508)	12½ (317)	49 (1244)	10 (254)	⅜	—	—	—		65608009

NEMA 7/9/3/4 Hazardous Location Enclosure (with or without CPT)

Size	Figure	Outline Dimensions			Mounting Dimensions		Mtg Screw	Conduit Size			Approx Ship Wt Lbs (Kg)	Ref Dwg
		A	B	C	D	E	G	K1	K2	K3		
0–2½	4	28¼ (718)	16¼ (413)	9¼ (235)	18⅜ (467)	15¾ (400)	½	½	3	¾	140	24-139-865-004
3–4	4	32¼ (819)	18¼ (464)	9 9/16 (243)	22½ (572)	17¾ (451)	½	½	3	¾	150	24-139-865-005

Note: Dimensions in inches (mm).
Dimensions for reference, not for construction.
Contact sales office for dimensions not listed.

Enclosed, Class 22, 43

Dimensions

Figure 5

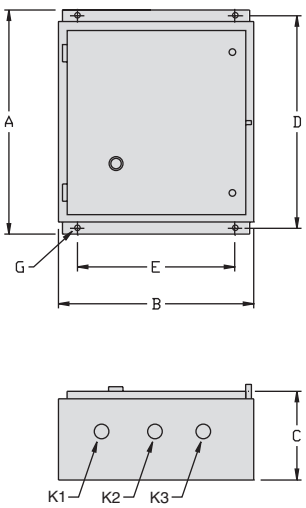

Figure 6

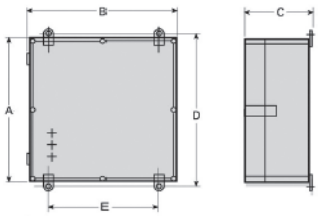

Figure 7

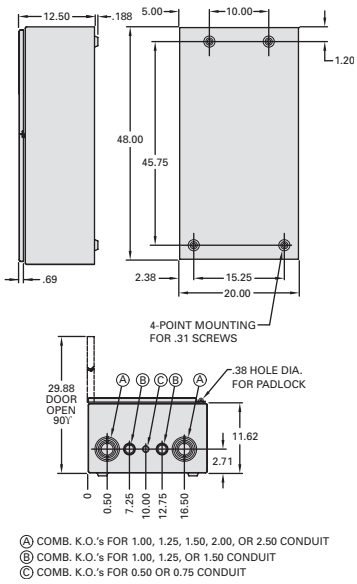

View is typical for bottom and top

NEMA 12/3/3R Industrial Use Enclosure (with or without CPT)

Size	Figure	Outline Dimensions			Mounting Dimensions		Mtg Screw	Conduit Size			Approx Ship Wt Lbs (Kg)	Ref Dwg
		A	B	C	D	E	G	K1	K2	K3		
0–1¾	5	13 (330)	12⅝ (321)	5⅜ (137)	12¼ (311)	10 (254)	¼	—	—	—	30 (14)	D17150
2–2½	5	16 (406)	13¼ (337)	6⅛ (156)	15¼ (387)	11 (279)	¼	—	—	—	33 (15)	D17150
3–3½ (w/o CPT)	5	25 1/16 (637)	17 9/16 (437)	7⅜ (187)	24 5/16 (618)	14 (356)	¼	—	—	—	53 (24)	D17150
3–3½ (w/ CPT)	5	29 1/16 (738)	23 3/16 (589)	9¼ (235)	27 9/16 (700)	20 (508)	5/16	—	—	—	64 (29)	D17150
4												
5	7	40 (1016)	20 (508)	11 (279)	41 (1041)	10 (254)	⅜	—	—	—		D65608007
6 (300 VA CPT max.)	7	48 (1219)	20 (508)	12½ (318)	45¾ (1162)	10 (254)	¼	—	—	—		

NEMA 4X Fiberglass Enclosure (with or without CPT)

Size	Figure	Outline Dimensions			Mounting Dimensions		Mtg Screw	Conduit Size			Approx Ship Wt Lbs (Kg)	Ref Dwg
		A	B	C	D	E	G	K1	K2	K3		
0–2½	6	23.78 (604)	14.68 (373)	6.89 (175)	22⅘ (579)	13⅘ (351)	¼	—	—	—	35	—
3–4	6	23.78 (604)	23.78 (604)	6.89 (175)	22⅘ (579)	22⅘ (579)	¼	—	—	—	38	—

Note: Dimensions in inches (mm).
Dimensions for reference, not for construction.
Contact sales office for dimensions not listed.

Enclosed, Class 25, 26

Dimensions

Figure 1

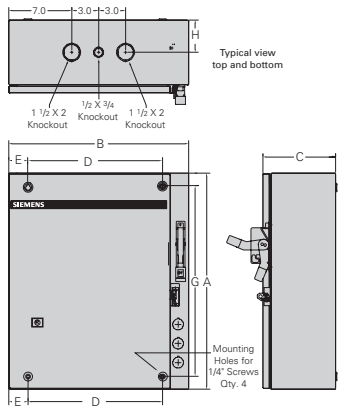

Figure 2

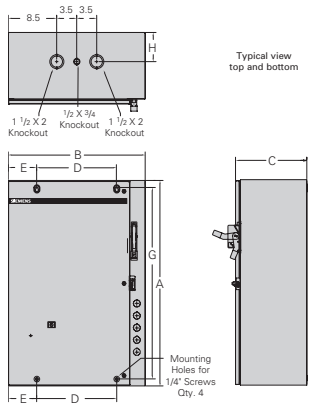

Figure 3

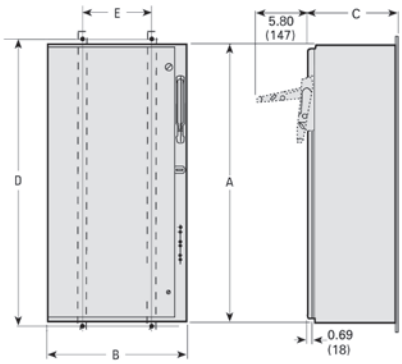

Figure 4

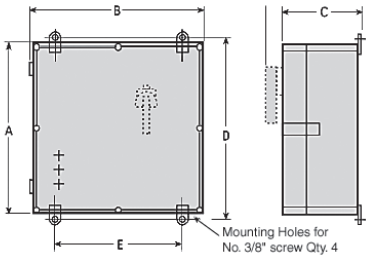

Figure 5

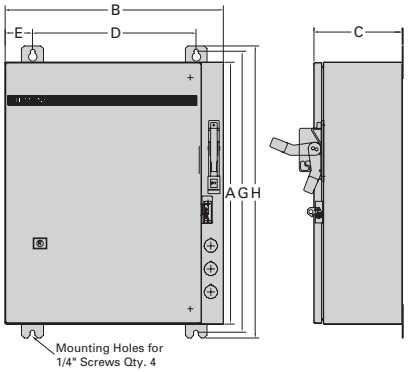

Figure 6

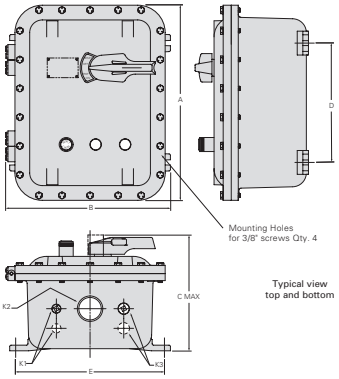

NEMA 1 Standard Width 0–6

Size	Figure	Outline Dimensions A	B	C	Mounting Dimensions D	E	G	H	Approx Ship Wt Lbs (Kg)	Ref Dwg
0–2½	1	24 (610)	20 (508)	8 (203)	15.00 (381)	2.125 (54)	21.00 (533)	3.50 (90)	60 (27)	D68774002
3–4	2	36 (914)	24 (610)	8 (203)	14.00 (356)	5.00 (127)	33.50 (851)	5.00 (127)	121 (55)	D68774003
5 (Painted)	3	72.156 (1833)	20 (508)	11.031 (280)	71 (1803)	16 (406)	—	—	250 (113)	D56032005
6 (Painted)	3	79.125 (2010)	22 (559)	13 (330)	78 (1981)	18 (457)	—	—	275 (125)	D56032006

NEMA 12/3/3R/4 (Painted), 4/4X (Stainless) Standard Width 0–6

Size	Figure	Outline Dimensions A	B	C	Mounting Dimensions D	E	G	H	Approx Ship Wt Lbs (Kg)	Ref Dwg
0–2½	5	24 (610)	20 (508)	8 (203)	15.00 (381)	3.50 (90)	25.75 (654)	26.75 (654)	63 (29)	D68774005
3–4	5	36 (914)	24 (610)	8 (203)	12 (305)	6.00 (152)	37.75 (959)	38.75 (984)	124 (56)	D68774006
5 (Painted)	3	72.156 (1833)	20 (508)	11.031 (280)	71 (1803)	16 (406)	—	—	250 (113)	D56032005
6 (Painted)	3	79.125 (2010)	22 (559)	13 (330)	78 (1981)	18 (457)	—	—	275 (125)	D56032006

NEMA 4X Fiberglass 0–4

Size	Figure	Outline Dimensions A	B	C	Mounting Dimensions D	E	Mtg Screw G	Conduit Size K1	K2	K3	Approx Ship Wt Lbs (Kg)	Ref Dwg
0–2½	4	23.780 (604)	14.680 (373)	6.890 (175)	24.125 (612.7)	12.250 (311)	⅜	—	—	—	18 (8)	24-139-861-001
3–4	4	23.780 (604)	23.780 (604)	6.890 (175)	24.125 (612.7)	21.250 (539.7)	⅜	—	—	—	28 (12.7)	24-139-861-003

NEMA 7/9/3/4 Hazardous Location 0–4

Size	Figure	Outline Dimensions A	B	C	Mounting Dimensions D	E	Mtg Screw G	Conduit Size K1	K2	K3	Approx Ship Wt Lbs (Kg)	Ref Dwg
0–2½	6	28.688 (729)	17.750 (451)	11.750 (298)	18.375 (467)	15.750. (400)	⅜	½	3	¾	140 (63.5)	24-139-865-004
3–4		Contact Sales Office										

Note: Dimensions in inches (mm).
Dimensions for reference, not for construction.
Contact sales office for dimensions not listed.

Enclosed, Class 30

Dimensions

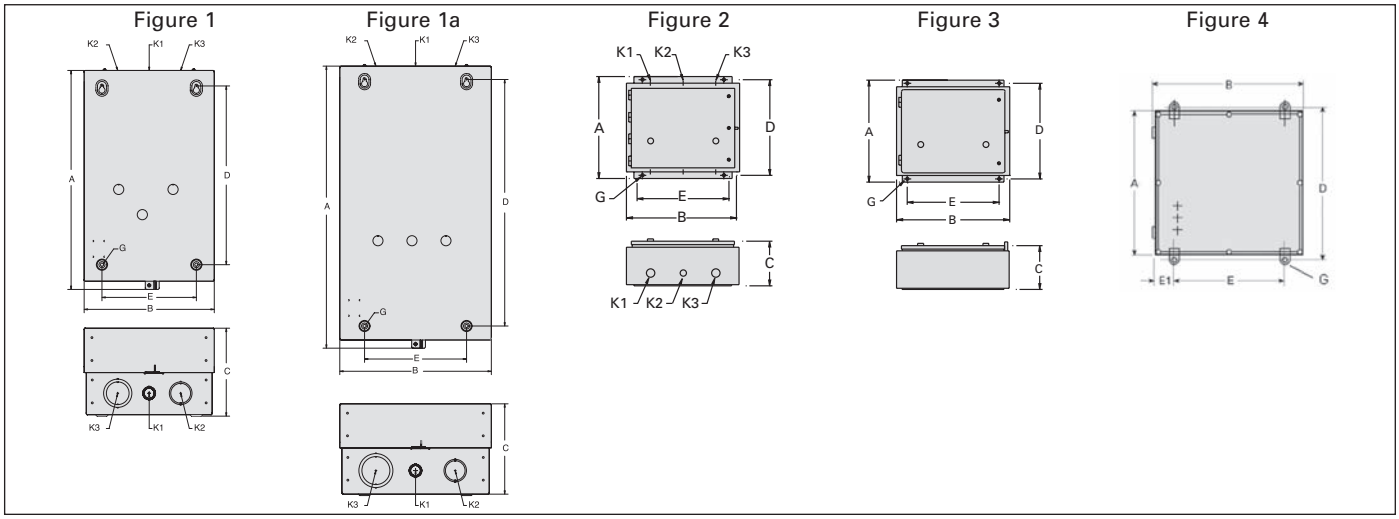

2 Speed 1 Winding

Size	Fig	Outline Dimensions A	Outline Dimensions B	Outline Dimensions C	Mounting Dimensions D	Mounting Dimensions E	Mtg Screw G	Conduit Size K1	Conduit Size K2	Conduit Size K3	Approx Ship Wt Lbs (Kg)	Ref Dwg
NEMA 1 General Purpose Enclosure (Standard width for use with or without CPT)												
0–1 ¾ w/o CPT	1	19 ⅛ (486)	11 ⅜ (289)	7 11/16 (195)	15 ⅝ (397)	8 ¼ (210)	¼	½–¾	1–1¼	1 ½–2	26 (12)	D68870
0–1 ¾ (200 VA)	1a	24 ⅞ (632)	13 ⅜ (340)	8 ⅛ (206)	21 ¾ (552)	9 (229)	¼	½–¾	1¼–1 ½	2–2 ½	52 (24)	D68870
2–2 ½	2	16 (406)	17.13 (435)	7.63 (194)	15.25 (387)	14 (355)	¼	½–¾	1¼–1 ½	1 ¼–1 ½	39 (20)	D42932001
3–3 ½	2	18.31 (465)	21.19 (538)	7.38 (187)	17.56 (446)	18 (457)	¼	1¼–1 ½	½–¾	1 ½–2	60 (27)	D72956002
4	3	29 (737)	23 3/16 (589)	9 ¼ (235)	27 ½ (699)	20 (508)	5/16	—	—	—	61 (28)	D43292001
NEMA 4/4X Stainless Steel Enclosure (Standard width for use with or without CPT)												
0–1 ¾ w/o CPT	3	13 (330)	12 ⅝ (321)	5 ⅜ (137)	12 ¼ (311)	10 (254)	¼	—	—	—	34 (15)	D41917000
0–1 ¾ w/ CPT	3	16 (406)	17 ⅛ (435)	7 ⅝ (194)	15 ¼ (387)	14 (355)	¼	—	—	—	47 (21)	
2–2 ½ w/o CPT	3	16 (406)	17 ⅛ (435)	7 ⅝ (194)	15 ¼ (387)	14 (355)	¼	—	—	—	47 (21)	
2–2 ½ w/ CPT	3	25 1/16 (637)	17 3/16 (437)	7 ⅜ (187)	24 5/16 (618)	14 (355)	¼	—	—	—	55 (25)	
3–3 ½	3	29 (737)	23 3/16 (589)	9 ¼ (235)	27 ½ (699)	20 (508)	5/16	—	—	—	61 (28)	D43292001
4	3	29 (737)	23 3/16 (589)	9 ¼ (235)	27 ½ (699)	20 (508)	5/16	—	—	—	61 (28)	D43292001
NEMA 12/3/3R Industrial Use Enclosure (Standard width for use with or without CPT)												
0–1 ¾ w/o CPT	3	13 (330)	12 ⅝ (321)	5 ⅜ (137)	12 ¼ (311)	10 (254)	¼	—	—	—	34 (15)	
0–1 ¾ w/ CPT	3	16 (406)	17 ⅛ (435)	7 ⅝ (194)	15 ¼ (387)	14 (355)	¼	—	—	—	47 (21)	D17150010
2–2 ½ w/o CPT	3	16 (406)	17 ⅛ (435)	7 ⅝ (194)	15 ¼ (387)	14 (355)	¼	—	—	—	47 (21)	D17150010
2–2 ½ w/ CPT	3	25 1/16 (637)	17 3/16 (437)	7 ⅜ (187)	24 5/16 (618)	14 (355)	¼	—	—	—	55 (25)	
3–4	3	29 (737)	23 3/16 (589)	9 ¼ (235)	27 ½ (699)	20 (508)	5/16	—	—	—	61 (28)	D19673000
NEMA 4X Fiberglass Enclosure (Standard width for use with or without CPT)												
0–2 ½	4	23.780 (604)	23.780 (604)	6.890 (175)	—	—	¼	—	—	—	28 (13)	24139861003
3–4	4	39.37 (1000)	29.53 (750)	12.60 (320)	—	—	—	—	—	—		24139861004

2 Speed 2 Winding

Size	Fig	Outline Dimensions A	Outline Dimensions B	Outline Dimensions C	Mounting Dimensions D	Mounting Dimensions E	Mtg Screw G	Conduit Size K1	Conduit Size K2	Conduit Size K3	Approx Ship Wt Lbs (Kg)	Ref Dwg
NEMA 1 General Purpose Enclosure (Standard width for use with or without CPT)												
0–2 ½ w/o CPT	1	19 ⅛ (486)	11 ⅜ (289)	7 11/16 (195)	15 ⅝ (397)	8 ¼ (210)	¼	½–¾	1–1 ¼	1 ½–2	30 (14)	D68870
0–2 ½ (200 VA)	1a	24 ⅞ (632)	13 ⅜ (340)	8 ⅛ (206)	21 ¾ (552)	9 (229)	¼	½–¾	1 ¼–1 ½	2–2 ½	52 (24)	D68870
3–4 w/o CPT	1a	24 ⅞ (632)	13 ⅜ (340)	8 ⅛ (206)	21 ¾ (552)	9 (229)	¼	½–¾	1 ¼–1 ½	2–2 ½	52 (24)	D68870
NEMA 4/4X Stainless Steel Enclosure (Standard width for use with or without CPT)												
0–1 ¾ w/o CPT	3	13 (330)	12 ⅝ (321)	5 ⅜ (137)	12 ¼ (311)	10 (254)	¼	—	—	—	34 (15)	
0–1 ¾ w/ CPT	3	16 (406)	17 ⅛ (435)	7 ⅝ (194)	15 ¼ (387)	14 (355)	¼	—	—	—	41 (19)	
2–2 ½ w/o CPT	3	16 (406)	13 ¼ (337)	6 (152)	15 ¼ (387)	11 (279)	¼	—	—	—	41 (19)	
2–2 ½ w/ CPT	3	16 (406)	17 ⅛ (435)	7 ⅝ (194)	15 ¼ (387)	14 (355)	¼	—	—	—	41 (19)	
3–3 ½ w/o CPT	3	25 1/16 (637)	17 3/16 (187)	7 ⅜ (187)	24 5/16 (618)	14 (355)	¼	—	—	—	55 (25)	
3–3 ½ w/ CPT	3	29 (737)	23 3/16 (589)	9 ¼ (235)	27 ½ (699)	20 (508)	5/16	—	—	—	61 (28)	D43292001
4	3	29 (737)	23 3/16 (589)	9 ¼ (235)	27 ½ (699)	20 (508)	5/16	—	—	—	61 (28)	D43292001
NEMA 12/3/3R Industrial Use Enclosure (Standard width for use with or without CPT)												
0–1 ¾ w/o CPT	3	13 (330)	12 ⅝ (321)	5 ⅜ (137)	12 ¼ (311)	10 (254)	¼	—	—	—	34 (15)	
0–1 ¾ w/CPT	3	16 (406)	17 ⅛ (435)	7 ⅝ (194)	15 ¼ (387)	14 (355)	¼	—	—	—	41 (19)	D17150010
2–2 ½ w/o CPT	3	16 (406)	13 ¼ (337)	6 ⅛ (156)	15 ¼ (387)	11 (279)	¼	—	—	—	41 (19)	
2–2 ½ w/CPT	3	16 (406)	17 ⅛ (435)	7 ⅝ (194)	15 ¼ (387)	14 (355)	¼	—	—	—	41 (19)	D17150010
3–3 ½ w/o CPT	3	25 1/16 (637)	17 3/16 (187)	7 ⅜ (187)	24 5/16 (618)	14 (355)	¼	—	—	—	55 (25)	
3–4 w/CPT	3	29 1/16 (738)	23 3/16 (589)	9 ¼ (235)	27 9/16 (700)	20 (508)	5/16	—	—	—	61 (28)	D19673000
NEMA 4X Fiberglass Enclosure (Standard width for use with or without CPT)												
0–2 ½	4	23.780 (604)	23.780 (604)	6.890 (175)	—	—	¼	—	—	—	28 (13)	24139861003
3–4	4	39.37 (1000)	29.53 (750)	12.60 (320)	—	—	—	—	—	—		24139861004

Note: Dimensions in inches (mm). Dimensions for reference, not for construction. Contact sales office for dimensions not listed.

Dimensions

Figure 1

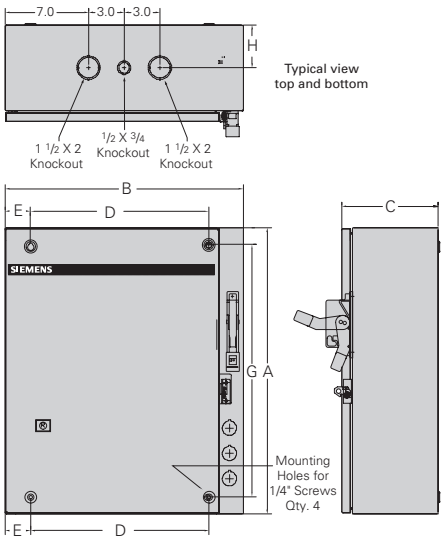

Figure 2

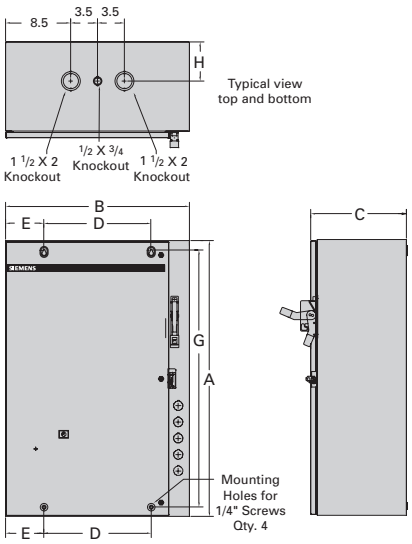

Figure 3

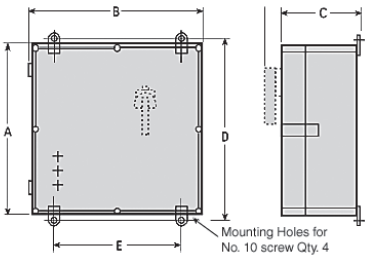

Figure 4

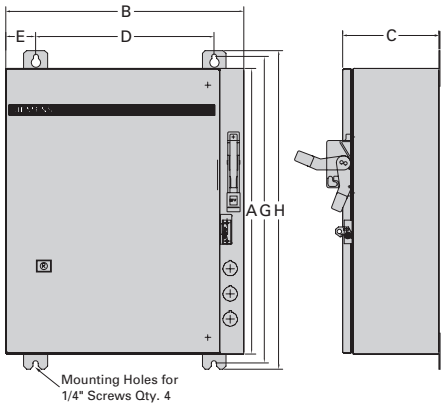

NEMA 1 Standard Width 0–4

Size	Figure	Outline Dimensions A	B	C	Mounting Dimensions D	E	G	H	Approx Ship Wt Lbs (Kg)	Ref Dwg
0–1¾ (1 Winding)	1	24 (610)	20 (508)	8 (203)	15.00 (381)	2.125 (54)	21.00 (533)	3.50 (90)	68 (31)	D68774
2–4 (1 Winding)	2	36 (914)	24 (610)	8 (203)	14.00 (356)	5.00 (127)	33.50 (851)	3.50 (90)	71 (32)	D68774
0–2½ (2 Winding)	1	24 (610)	20 (508)	8 (203)	15.00 (381)	2.125 (54)	21.00 (533)	3.50 (90)	135 (61)	D68774
3–4 (2 Winding)	2	36 (914)	24 (610)	8 (203)	14.00 (356)	5.00 (127)	33.50 (851)	3.50 (90)	138 (63)	D68774

NEMA 12/3/3R/4 (Painted), 4/4X Stainless Standard Width 0–4

0–1¾ (1 Winding)	4	24 (610)	20 (508)	8 (203)	15.00 (381)	2.50 (64)	25.75 (654)	26.75 (680)	68 (31)	D68774
2–4 (1 Winding)	4	36 (914)	24 (610)	8 (203)	12 (305)	6.00 (152)	37.75 (959)	38.75 (984)	71 (32)	D68774
0–2½ (2 Winding)	4	24 (610)	20 (508)	8 (203)	15.00 (381)	2.50 (64)	25.75 (654)	26.75 (680)	135 (61)	D68774
3–4 (2 Winding)	4	36 (914)	24 (610)	8 (203)	12 (305)	6.00 (152)	37.75 (959)	38.75 (984)	138 (63)	D68774

Nema 4X Fiberglass 0–4

Size	Figure	Outline Dimensions A	B	C	Mounting Dimensions D	E	Mtg Screw G	Conduit Size K1	K2	K3	Approx Ship Wt Lbs (Kg)	Ref Dwg
0–1¾	3	23.780 (604)	14.680 (373)	6.890 (175)	24.125 (613)	12.250 (311)	¼	—	—	—	18 (8)	—
2–4	3	23.780 (604)	23.780 (604)	6.890 (175)	24.125 (613)	21.250 (540)	¼	—	—	—	28 (13)	—

Note: Dimensions in inches (mm).
Dimensions for reference, not for construction.
Contact sales office for dimensions not listed.

Dimensions

Figure 1

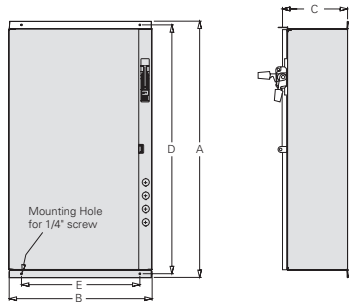

Figure 2

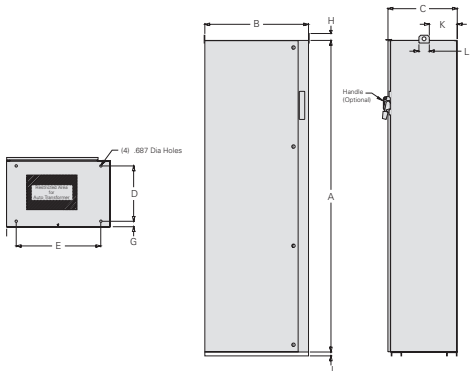

Class 36, 37, NEMA 1, 4, 4X, 12/3R, Combination and Non-combination

Reduced Voltage AutoTransformer Size	Part Winding & Wye Delta		Figure	A	B	C	D	E	G	H	I	J	K	L
	Disconnect	Circuit Breaker												
1 3/4–2 1/2	0–2	0–2 1/2	1	43 5/16	24 5/32	11	42 11/32	20	—	—	—	—	—	—
3–3 1/2	2 1/2–3 1/2	3–3 1/2	1	55 5/16	28 9/32	11	54 11/32	24	—	—	—	—	—	—
4	4	4	1	74 21/32	28 9/32	11	73 13/32	24	—	—	—	—	—	—
5, 6	5, 6	5, 6	2	90	29 30/31	20	16	24 7/16	2 16/21	1 23/40	—	1 1/8	8 3/40	3

Class 82 size 1

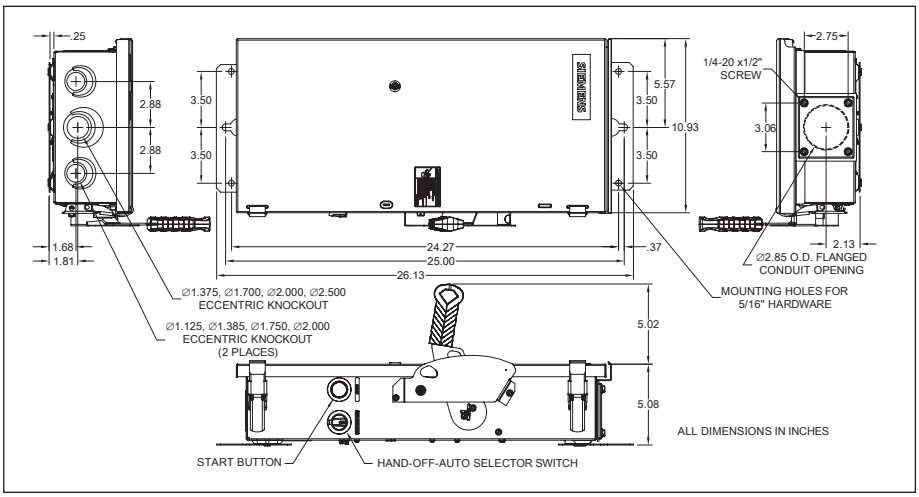

Class 82 Size 1 1/2, 2

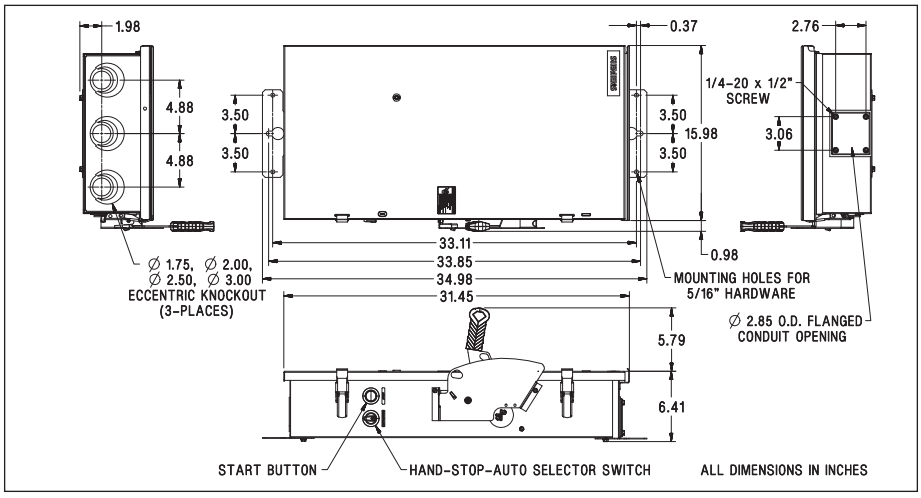

Dimensions

Figure 1

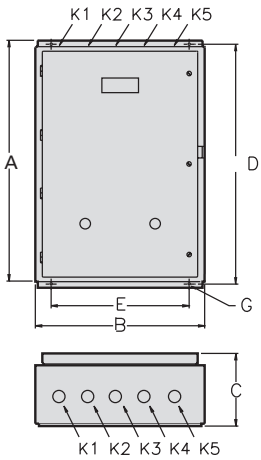

Figure 2

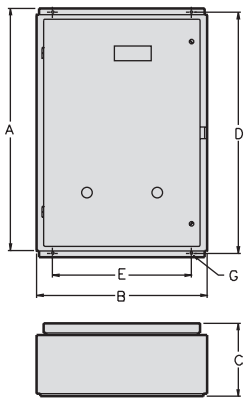

Figure 3

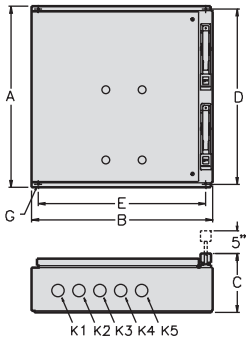

Class 83 Non-Combination Type

Enclosure Type	Size	Outline Dimensions				Mounting Dimensions		Mounting Screw	Conduit Size					Approx Ship Wt Lbs
		Figure	A	B	C	D	E	G	K1	K2	K3	K4	K5	
NEMA 1	0–1¾	1	19½	16⅛	6½	18¾	13	¼	1¼–1½	½–¾	½	½–¾	1¼–1½	20
	2, 2½	1	25 1/16	17 3/16	7⅜	24 5/16	14	¼	1¼–1½	½–¾	½–¾	1¼–1½	1½–2	57
	3–4	1	29 11/16	23 3/16	9¼	27 9/16	20	5/16	2–2½	1¼–1½	½–¾	1¼–1½	2–2½–3	93
NEMA 12	0–1¾	2	19½	16⅛	6½	18¾	13	¼	—	—	—	—	—	20
	2, 2½	2	25 1/16	17 3/16	7⅜	24 5/16	14	¼	—	—	—	—	—	57
	3–4	2	29 1/16	23 3/16	9¼	27 9/16	20	5/16	—	—	—	—	—	93
NEMA 4/4X②	0–1¾	2	19½	16⅛	6½	18¾	13	¼	—	—	—	—	—	20
	2, 2½	2	25 1/16	17 3/16	7⅜	24 5/16	14	¼	—	—	—	—	—	57
	3–4	2	29 1/16	23 3/16	9¼	27 9/16	20	5/16	—	—	—	—	—	93

Class 84 Combination Type

Enclosure Type	Size	Outline Dimensions				Mounting Dimensions		Mounting Screw	Conduit Size					Approx Ship Wt Lbs
		Figure	A	B	C	D	E	G	K1	K2	K3	K4	K5	
NEMA 1	0–1¾	3	34⅛	24⅝	7 9/16	33	20	⅜	⅞–1⅛	⅞–1⅛	1⅛–1 23/64	1⅛–1 23/64	1 23/64–1 23/32	70
	2–4	3	56	28½	9 11/16	54 13/16	24¼	⅜	—	—	—	—	—	106
NEMA 4(painted) 4X, 12	0–1¾	3	34⅛	24⅝	7 9/16	33	20	⅜	—	—	—	—	—	70
	2–4	3	56	28½	9 11/16	54 13/16	24¼	⅜	—	—	—	—	—	106

① Dimensions may vary for size 3 & 4 stainless steel enclosures.

② NEMA 4 Painted, 4X Stainless Steel.

Outline Drawings

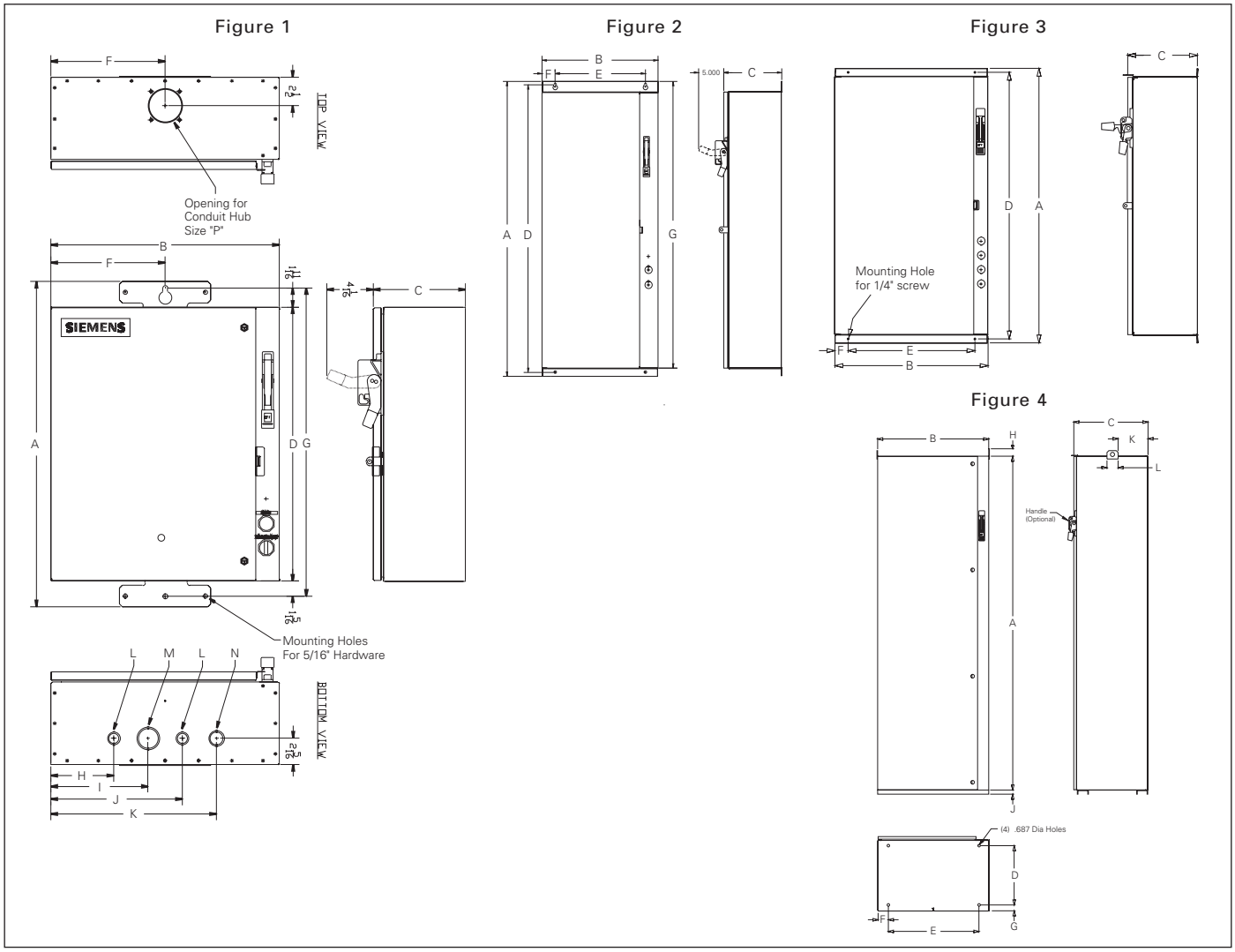

Class 87 Standard and Vacuum Starter Pump Panel

Size	Figure	A	B	C	D	E	F	G	H	I	J	K	Conduit Knockout L	Conduit Knockout M	Conduit Knockout N	Hub P
1 – 2½	1	28½	20	8 1/16	24	—	10	27	5 1/2	8 1/2	11 1/2	14 1/2	1/2 x 3/4	1 1/4 x 1	3/4 x 1	1 1/2
3 – 4	1	40½	24	8 3/32	36	—	12	39	8 7/16	11 15/16	15 7/16	—	1 31/32 x 2 15/32	7/8 x 1 1/8	—	2 1/2
5	2	72 5/32	20	11	71	16	2 1/8	70 29/32	—	—	—	—	—	—	—	—
6	2	79 1/8	22	12 15/16	78	18	2 1/8	77 7/8	—	—	—	—	—	—	—	—
4 (Vac)	2	55 31/32	24 3/8	9 22/32	54 26/32	20 1/4	2 1/8	54 23/32	26 3/16	—	5	27 14/32	—	—	—	—

Class 88 Reduced Voltage Pump Panels

RVAT Size	Part Winding & Wye Delta: Fusible Disconnect	Part Winding & Wye Delta: Circuit Breaker	Figure	A	B	C	D	E	F	H	I	J	K	L
2–2½	1–2	1–2½	3	43 5/16	24 5/32	11	42 11/32	20	2 1/16	—	—	—	—	—
3–3½	2½–3½	3–3½	3	55 5/16	28 9/32	11	54 11/32	24	2 1/8	—	—	—	—	—
4	4	4	3	74 21/32	28 9/32	11	73 13/32	24	2 1/8	—	—	—	—	—
5, 6	5, 6	5, 6	4	90	30	20	16	24 7/16	2 3/4	1 1/2	—	1 1/8	8 1/16	3

Note: Dimensions in inches (millimeters). Dimensions for reference, not for construction. Contact Sales Office for dimensions not listed.

Enclosed Contactors, Class LC and LE

Dimensions

Figure 1

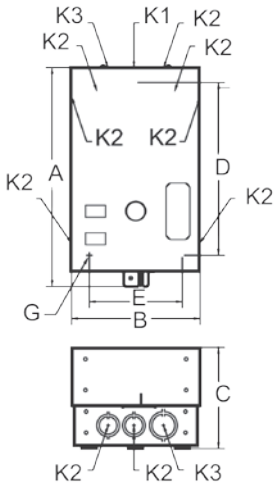

Figure 2

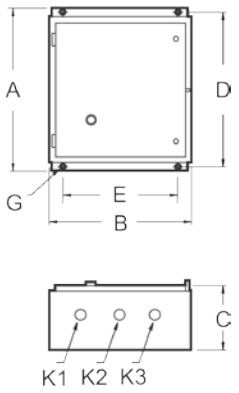

Figure 3

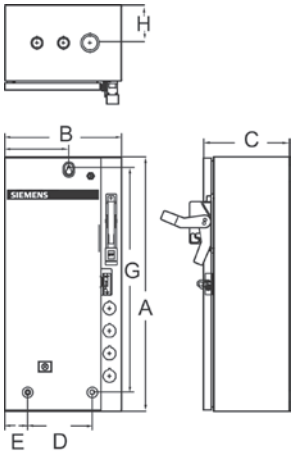

Enclosure Type	Contactor Rating (Class LC and LE)	Fig.	Outline Dimensions			Mounting		Conduit Size				
			A	B	C	D	E	K1	K2	K3	K4	K5
1 without CPT	LE 20/30A 3-4P	1	10.97	6.41	5.03	8.22	4.62	0.5	0.50-0.75	0.75–1	—	—
	LC 30A 2-12P, LE 60A 3P	1	13.53	7.97	6.38	10.25	6.00	0.50-0.75	0.75-1	1-1.25	—	—
	LE 30/60A 6-12P, LE 100A 3P	1	19.12	11.38	7.69	15.62	8.25	0.50-0.75	1-1.25	1.5-2	—	—
	LE 200-400A 3P	2	26.00	17.62	12.50	25.19	15.50	0.50-0.75	1.25-1.5	1.25-1.5	—	—
1 with CPT	LC 30A 2-12P, LE 20A 3-4P, LE 30A 3-9P, LE 60A 3-9P, LE 100A 3P	1	19.12	11.38	7.69	15.62	8.25	0.50-0.75	1-1.25	1.5–2	—	—
	LE 30/60A 12P	1	24.88	13.38	8.12	21.75	9.00	0.50-0.75	1.25-1.5	2-2.5	—	—
	LE 200-400A 3P	2	26.00	17.62	12.50	25.19	15.50	—	1.25-1.5	1.25-1.5	—	—
12/3R & 4/4X without CPT	LE 20A 3-4P, LE 30/60A 3-9P, LE 100A 3P, LC 30A 2-12P	2	16.00	13.25	6.12	15.25	11.00	—	—	—	—	—
	LE 30/60A 12P	2	26.00	13.12	7.56	25.25	10.00	—	—	—	—	—
	LE 200-400A 3P	2	26.00	17.62	12.50	23.19	15.50	—	—	—	—	—
12/3R & 4/4X with CPT	LE 20/30A 3-4P, LE 60A 3P	2	16.00	13.25	6.12	15.25	11.00	—	—	—	—	—
	LC 30A 2-12P	2	16.00	17.13	7.63	15.25	11.00	—	—	—	—	—
	LE 30/60A 6-12P, LE 100A 3P	2	26.00	13.12	7.56	15.25	14.00	—	—	—	—	—
	LE 200-400A 3P	2	26.00	17.62	12.50	25.19	15.50	—	—	—	—	—

Enclosure Type	Type (Class LE)	Contactor Rating	Fig.	Outline Dimensions		
				A	B	C
1, 12 & 4/4X with and without CPT	Fusible and Non-fusible Disconnect	20–60A	3	24	11	8
		100A	3	24	20	8
		200A	3	46	20	10
		300A	3	76	22	13
	Circuit Breaker	20-100A	3	24	11	8

Dimensions are in inches.
1) G designates 0.25" mounting screw.
2) Enclosures shown in figure 1 have lift-off covers. All other enclosures have hinged covers.

Enclosed Contactors, Class CLM, CM

Dimensions

Figure 1

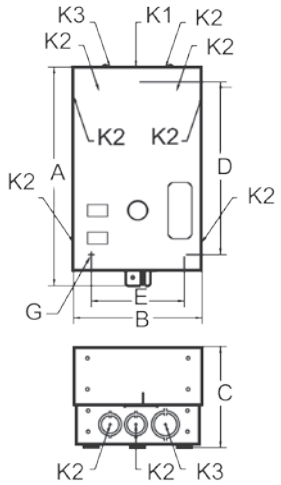

Figure 2

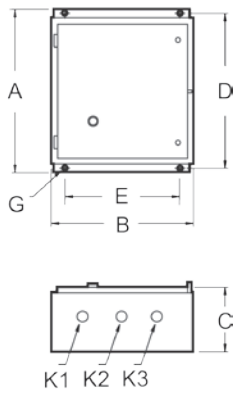

Figure 3

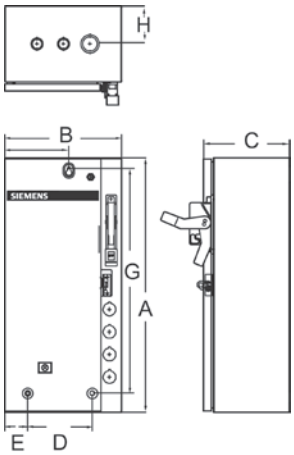

Enclosure Type	Contactor Rating (Class CLM)	Fig.	Outline Dimensions			Mounting		Conduit Size				
			A	B	C	D	E	K1	K2	K3	K4	K5
1 without CPT	30–60A (2-5p)	1	10.97	6.41	5.03	8.22	4.62	0.5	0.50-0.75	0.75–1	—	—
	20A (2–12p)	1	13.53	7.97	6.38	10.25	6.00	0.50-0.75	0.75-1	1-1.25	—	—
	30–60A (6-12p)	2	16.00	17.12	7.62	15.25	14.00	0.50-0.75	1.25-1.5	1.25-1.5	—	—
	100A (2-5p)	1	19.12	11.38	7.69	15.62	8.25	0.50-0.75	1-1.25	1.5-2	—	—
	200A (2-5p)	1	24.88	13.38	8.12	21.75	9.00	0.50-0.75	1.25-1.5	2.5	—	—
	300–400A (2-5p)	2	48.00	20.00	12.50	45.19	10.00	2.00-2.50	1.25-1.5	0.5-0.75	1.25-1.5	2-2.5
1 with CPT	20A (2–12p), 30A (2–5p)	1	19.12	11.38	7.69	15.62	8.25	0.50-0.75	1-1.25	1.5–2	—	—
	30–60A (6–12p)	2	16.00	17.12	7.62	15.25	14.00	0.50-0.75	1.25-1.5	1.25-1.5	—	—
	100-200A (2-5p)	2	26.00	17.62	12.50	25.19	15.50	—	1.25-1.5	1.25-1.5	—	—
	300–400A (2-5p)	2	48.00	20.00	12.50	45.19	10.00	2.00-2.50	1.25-1.5	0.5-0.75	1.25-1.5	2-2.5
12/3R & 4/4X without CPT	20A (2–12p), 30A (2–12p), 60A (2-10p)	2	16.00	13.25	6.12	15.25	11.00	—	—	—	—	—
	100A (2-5p)	2	16.00	13.00	9.50	15.12	11.00	—	—	—	—	—
	60A (12p)	2	19.00	22.00	8.00			—	—	—	—	—
	200A (2-5p)	2	26.00	17.62	12.50	23.19	15.50	—	—	—	—	—
	300A -400A (3p),	2	48.00	20.00	12.50	49.00	10.00	—	—	—	—	—
12/3R & 4/4X with CPT	20A (2-12p), 30A (2-5p)	2	16.00	13.25	6.12	15.25	11.00	—	—	—	—	—
	30A (6-12p)	2	16.00	17.12	7.62	15.25	14.00	—	—	—	—	—
	60-100A (2-5p)	2	16.00	13.00	9.50	15.12	11.00	—	—	—	—	—
	60A (6-12p)	2	19.00	22.00	8.00			—	—	—	—	—
	200A (3p)	2	26.00	17.62	12.50	25.19	15.50	—	—	—	—	—
	300–400A (3p)	2	48.00	20.00	12.50	49.00	10.00	—	—	—	—	—

Enclosure Type	Type (Class CM)	Contactor Rating	Fig.	Outline Dimensions		
				A	B	C
1, 12 & 4/4X with and without CPT	Fusible and Non-fusible Disconnect	20–60A	3	24	11	8
		100A	3	24	20	8
		200A	3	46	20	10
		300A	3	76	22	13
	Circuit Breaker	20-100A	3	24	11	8

Dimensions are in inches.
1) G designates 0.25" mounting screw.
2) Enclosures shown in figure 1 have lift-off covers. All other enclosures have hinged covers.

Class 11 - 3RV

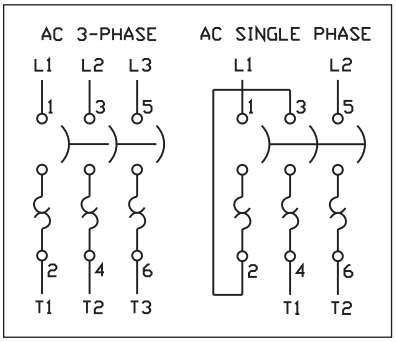

Signaling Contact for Class 11 - 3RV

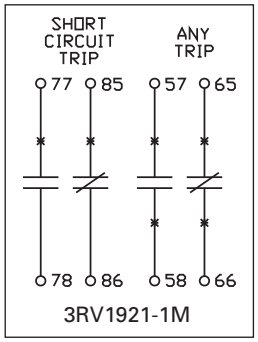

Typical Wiring Diagrams—Class SMF

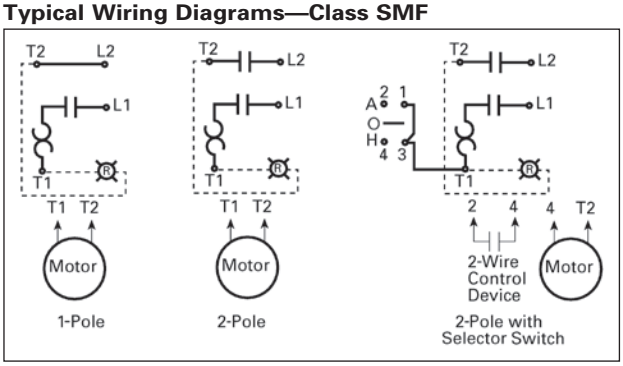

Typical Wiring Diagrams—MMS

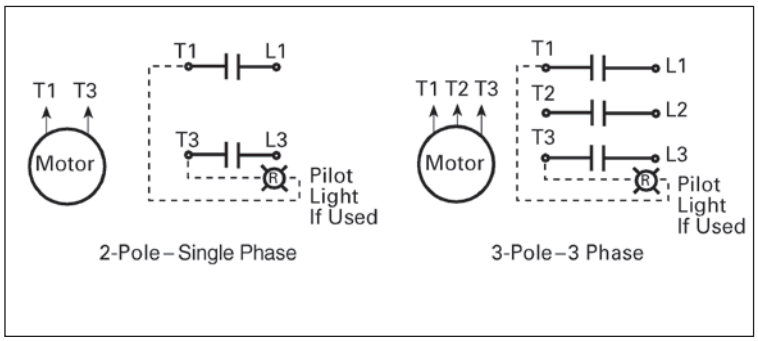

AC Reversing Manual Starter and Manual Motor Starting Switches

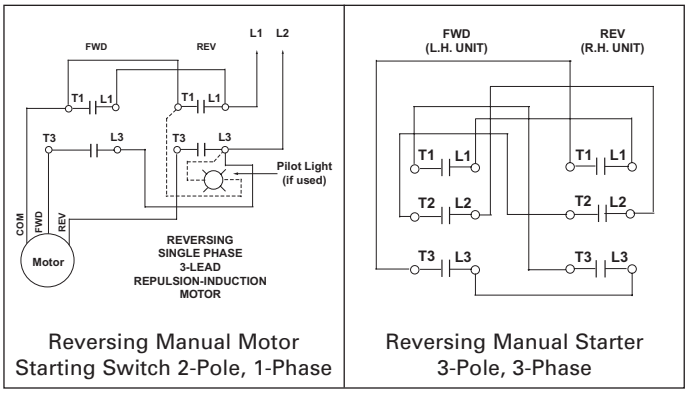

Reversing Manual Motor Starting Switch 2-Pole, 1-Phase

Reversing Manual Starter 3-Pole, 3-Phase

AC 2-Speed Manual Motor Starting Switches

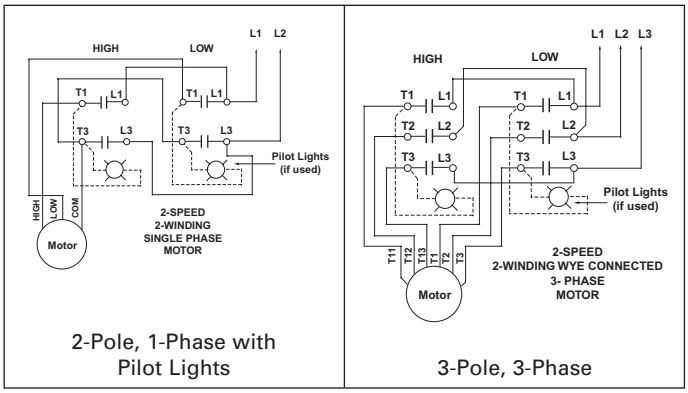

2-Pole, 1-Phase with Pilot Lights

3-Pole, 3-Phase

3-Pole Reversing Switches

THREE PHASE MOTOR			
LINE AND MOTOR LEADS		L.H. UNIT	R.H. UNIT
Line	L1 to L2 to L3 to	– – –	L1 L2 L3
Meter	T1 to T2 to T3 to	T1 T2 T3	– – –
Pilot Light Leads to		– –	T1 T3

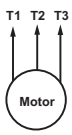

SINGLE PHASE CAPACITOR OR SPLIT PHASE MOTOR			
LINE AND MOTOR LEADS		L.H. UNIT	R.H. UNIT
Line	L1 to L2 to	– –	L1 L2
Meter	T1 to T4 to T5 to T8 to	T1 T3 L1 T2	– – – –
Furnish Jumper		L3 to	T2
Pilot Light Leads to		– –	T1 T3

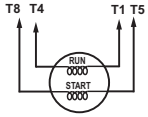

SINGLE PHASE 4-LEAD REPULSION - INDUCTION MOTOR			
LINE AND MOTOR LEADS		L.H. UNIT	R.H. UNIT
Line	L1 to L2 to	– –	L1 L2
Meter	T1 to T4 to T5 to T8 to	T2 L3 T3 T1	– – – –
Furnish Jumper		L3 to	T2
Pilot Light Leads to		– –	L1 T2

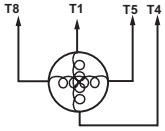

3-Phase and Single Phase Magnetic Starters

Three Phase Magnetic Starter, Size 00–4

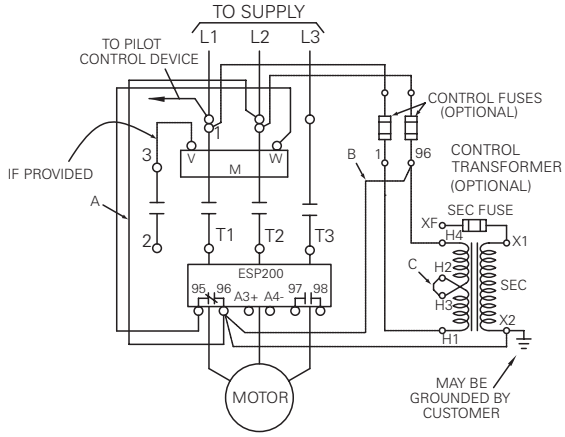

Single Phase Magnetic Starter①②

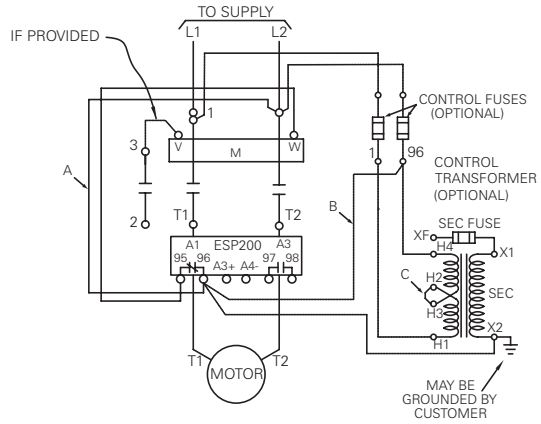

Three Phase Magnetic Starter with DC Coil, Sizes 00–4

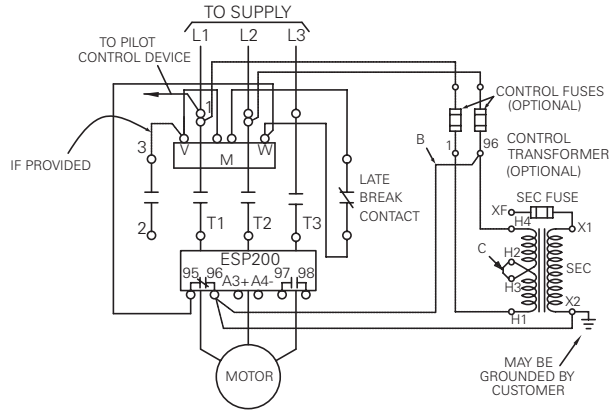

Solid State Overload 3-Phase Sizes 5-8

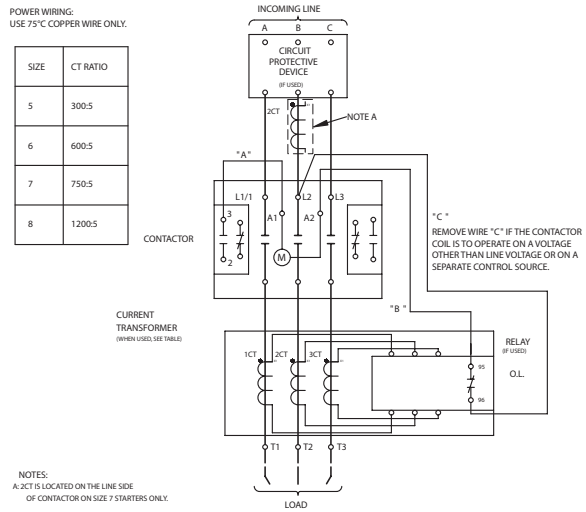

Ambient Compensated Single Phase Sizes 00-2 1/2

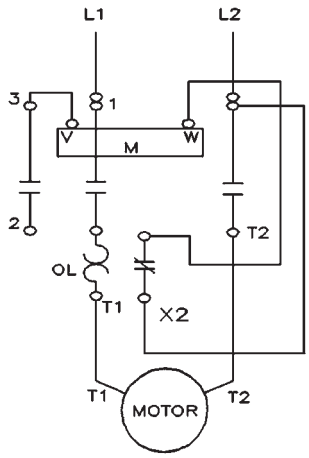

Ambient Compensated 3-Phase Sizes 00-2 1/2

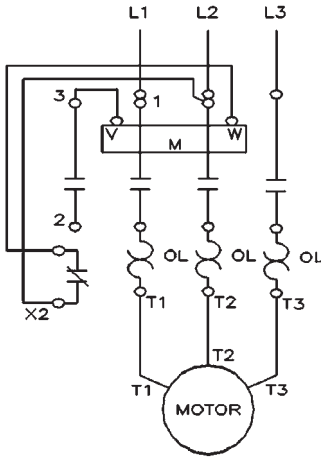

Ambient Compensated 3-Phase Sizes 3-4

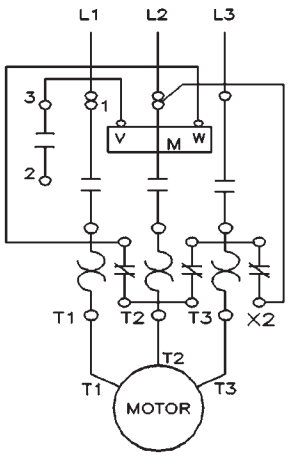

① Warning: The ESP200 Starter and Single Phase Motor must be wired as shown above. For L1, L2 do not use the middle terminal or hole.

② Full Load Amps (FLA): Adjustment of the ESP200 solid state overload relay accommodates the single phase motor.

3-Phase

Size 00–4①

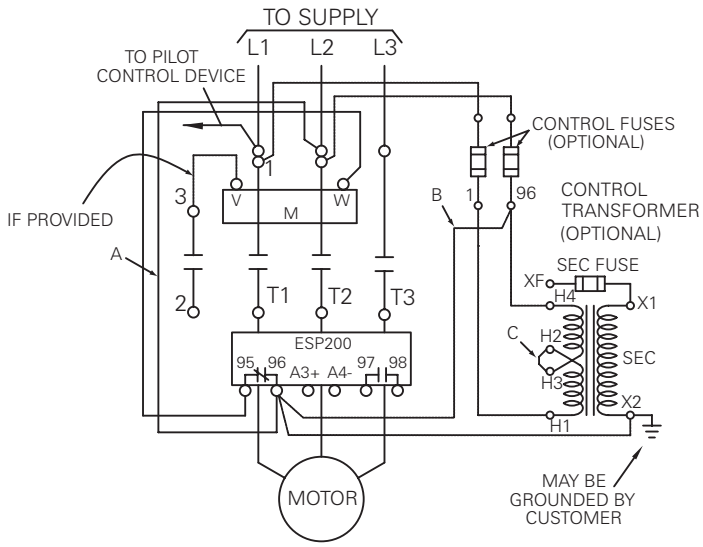

Size 5–8②

POWER WIRING:
USE 75°C COPPER WIRE ONLY.

SIZE	CT RATIO
5	300:5
6	600:5
7	750:5
8	1200:5

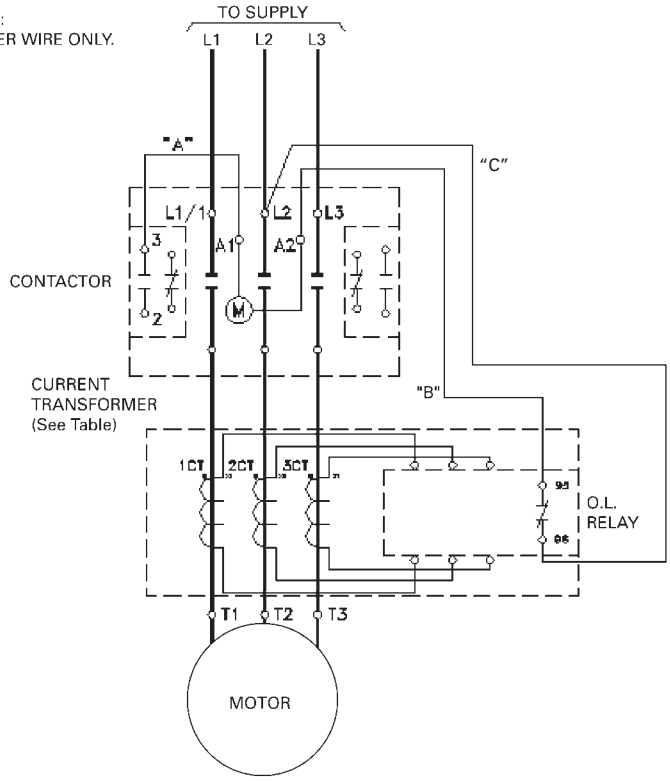

① Remove wire "C" if control transformer is used. For separate control voltage source, remove jumpers "A" and "B" and connect source to control fuse line terminals.

② Remove wire "C" if the contactor coil is to operate on a voltage other than line voltage or in a separate control source.

3-Phase Ambient Compensated Overload

Bimetal Overload
Sizes 0-1 3/4

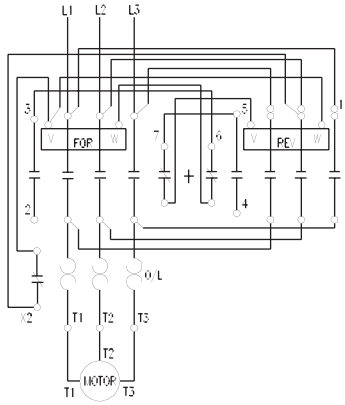

Bimetal Overload
Sizes 2-2 1/2

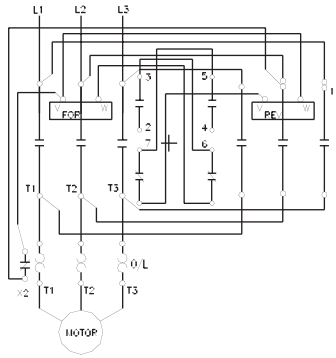

Bimetal Overload
Sizes 3-4

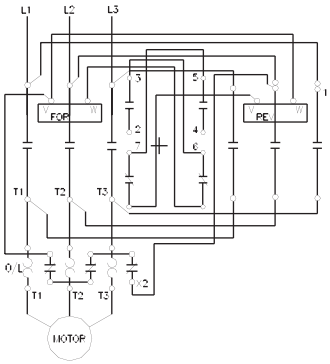

Single Phase Ambient Compensated Overload

3-Wire, 2-Pole Sizes 0-1 3/4

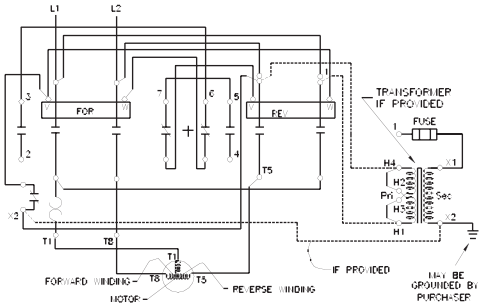

3-Phase Solid State Overload

3-Phase Reversing Magnetic Starter
Sizes 00–1¾

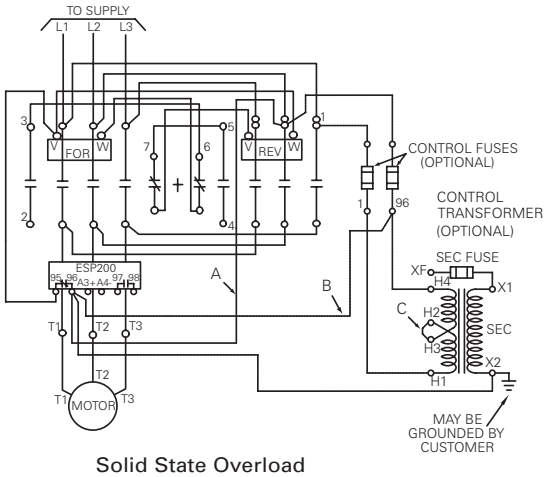

3-Phase Reversing Magnetic Starter
Sizes 2–4

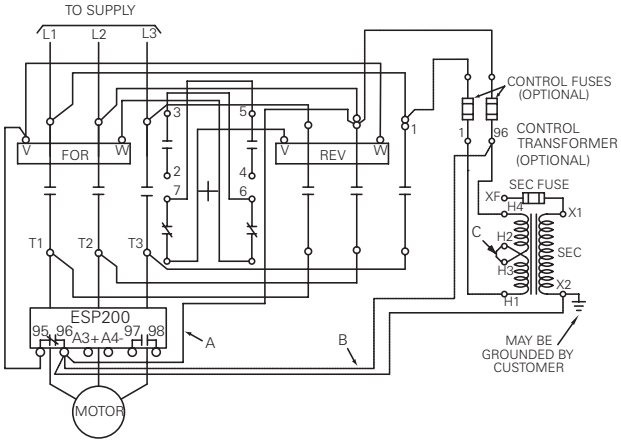

Solid State Overload
Sizes 5–6

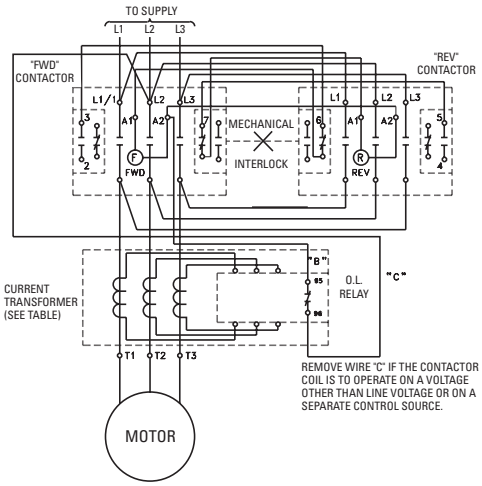

3-Phase Reversing Magnetic Starter
with DC Coil, Sizes 00–1¾

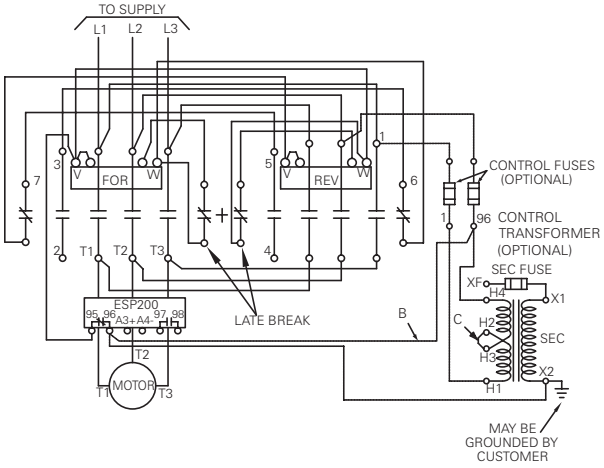

3-Phase Reversing Magnetic Starter
with DC Coil, Sizes 2–4

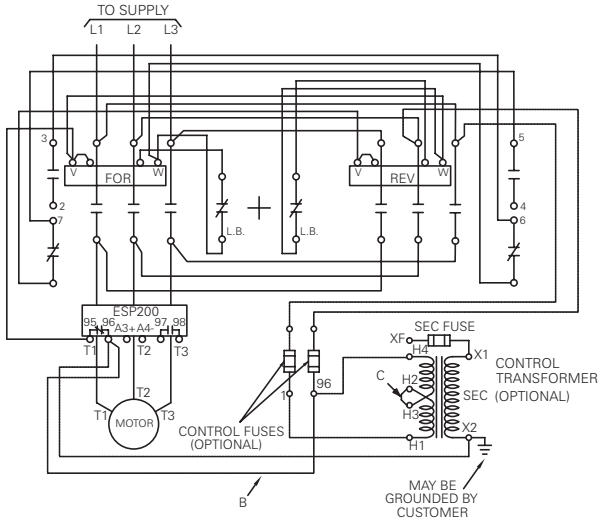

3-Phase

3-Phase Reversing Magnetic Starter
Sizes 00–1¾

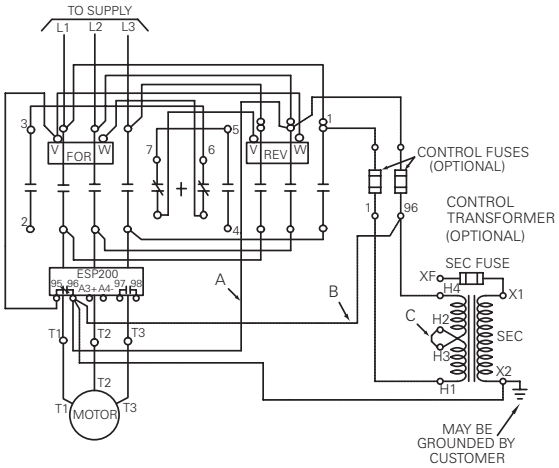

3-Phase Reversing Magnetic Starter
Sizes 2–4

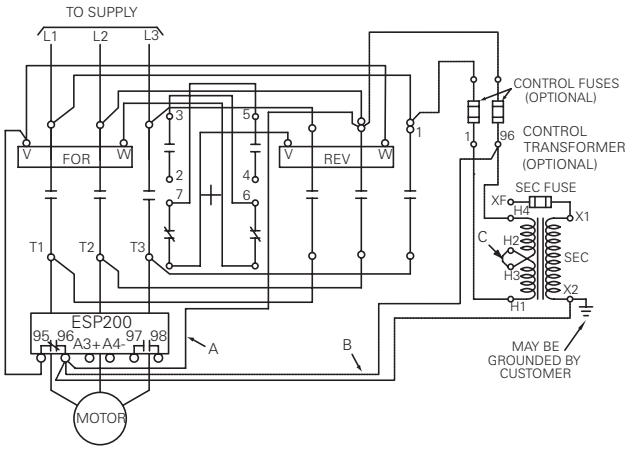

Size 5–6

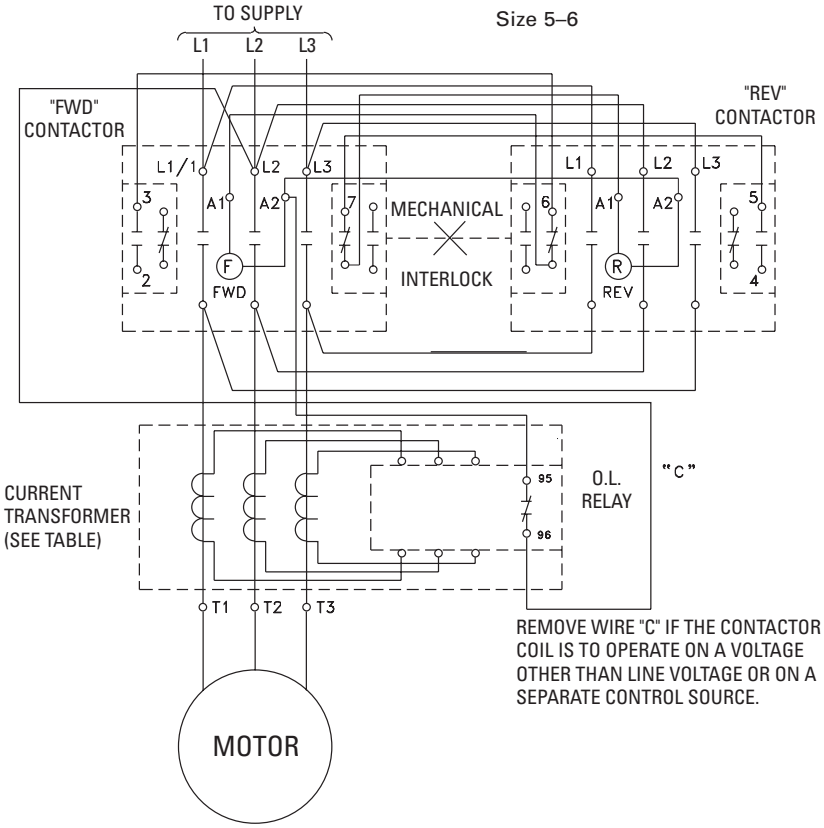

SIZE	CT RATIO
5	300:5
6	600:5

1 Winding Constant Horsepower Size 0–1³/₄

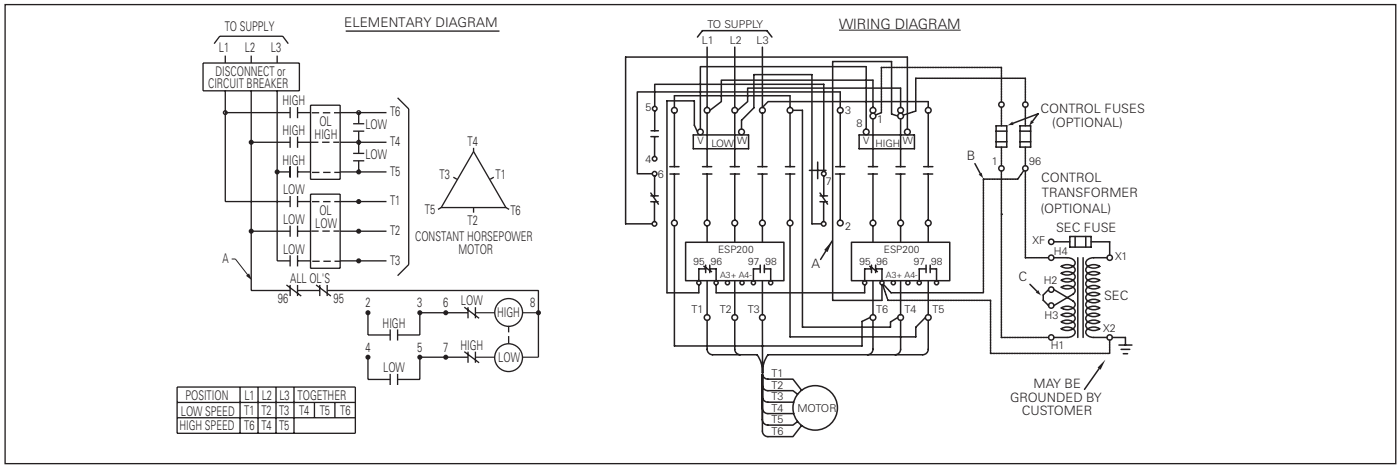

POSITION	L1	L2	L3	TOGETHER		
LOW SPEED	T1	T2	T3	T4	T5	T6
HIGH SPEED	T6	T4	T5			

1 Winding Constant Horsepower Size 2–4

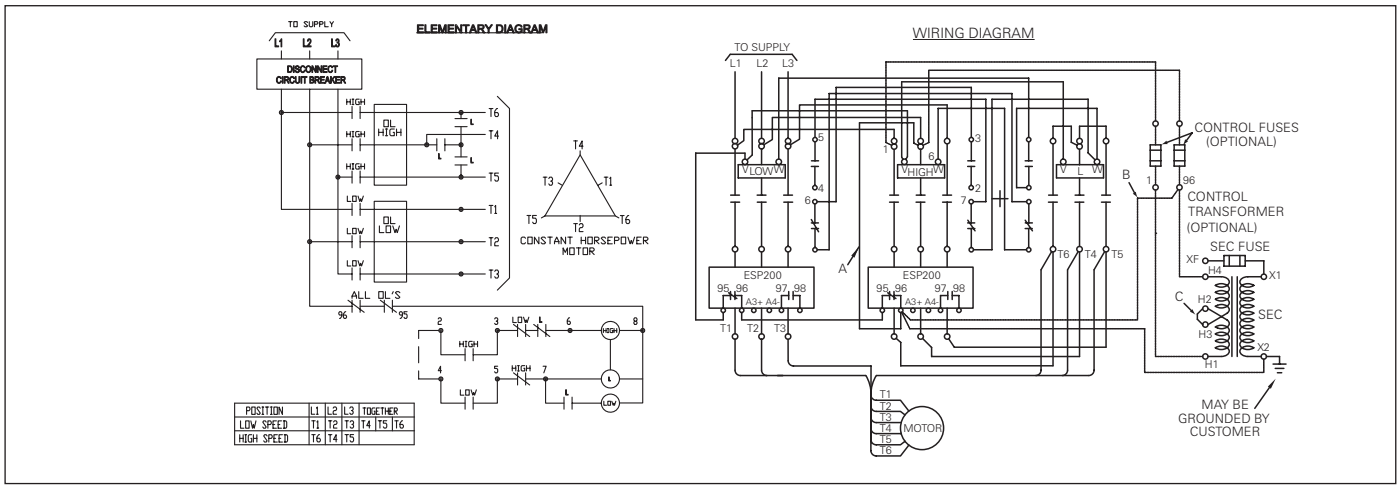

POSITION	L1	L2	L3	TOGETHER		
LOW SPEED	T1	T2	T3	T4	T5	T6
HIGH SPEED	T6	T4	T5			

1 Winding Constant or Variable Torque Size 0–1³/₄

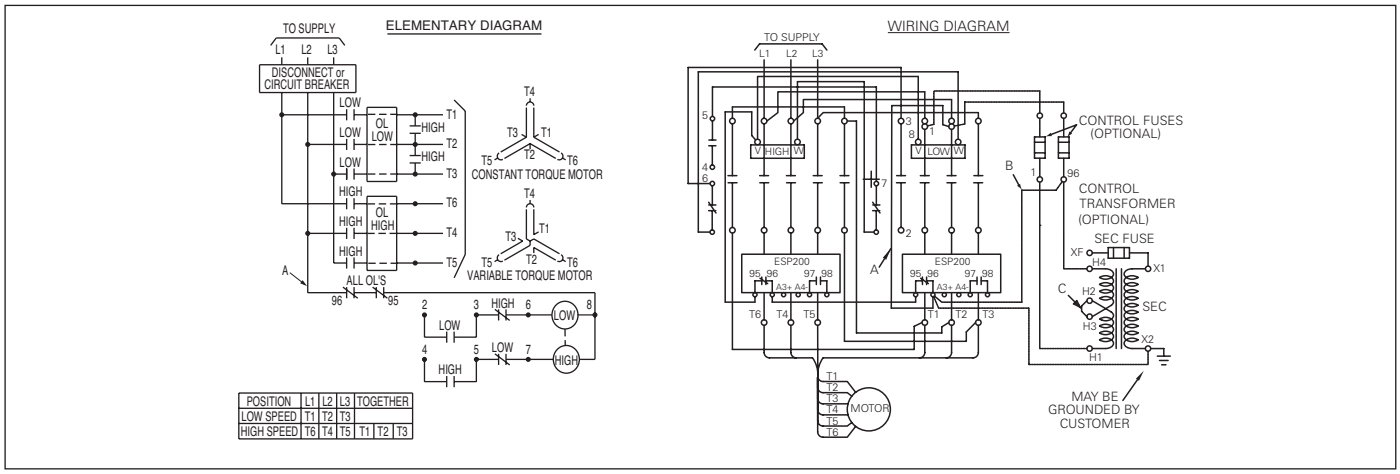

POSITION	L1	L2	L3	TOGETHER		
LOW SPEED	T1	T2	T3			
HIGH SPEED	T6	T4	T5	T1	T2	T3

Note: For separate control voltage source, remove jumpers "A" and "B" and connect source to control fuse terminal. Remove jumper "C" if control transformer is used.

1 Winding Constant or Variable Torque Size 2–4

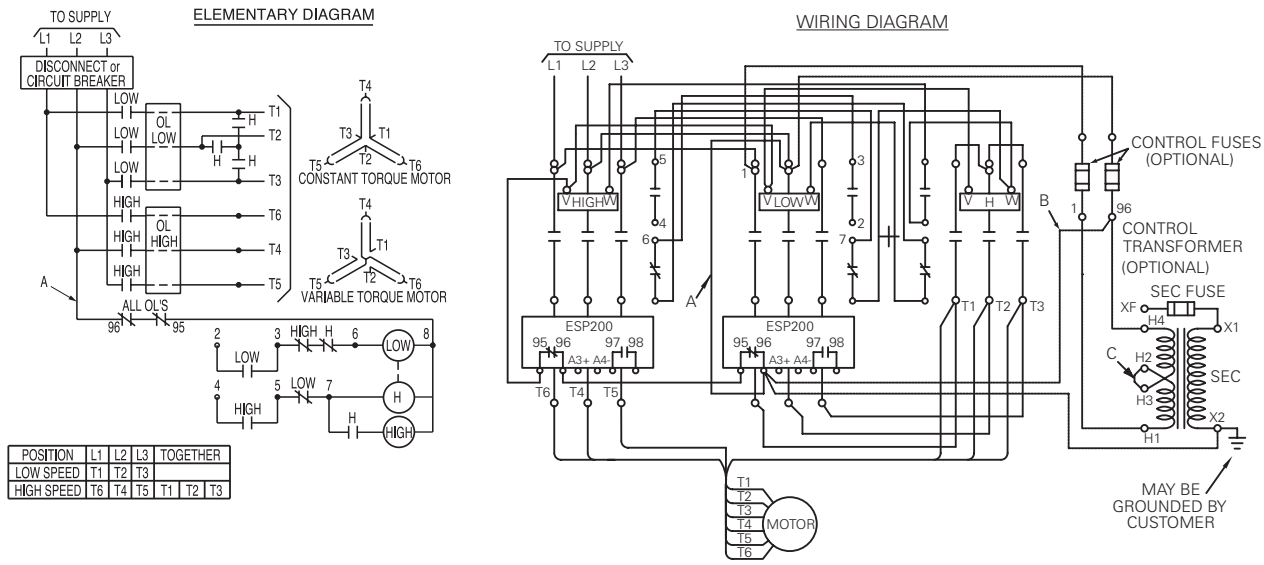

POSITION	L1	L2	L3	TOGETHER		
LOW SPEED	T1	T2	T3			
HIGH SPEED	T6	T4	T5	T1	T2	T3

D68784002

2 Winding Constant Horsepower & 2 Winding Constant or Variable Torque Size 0–4

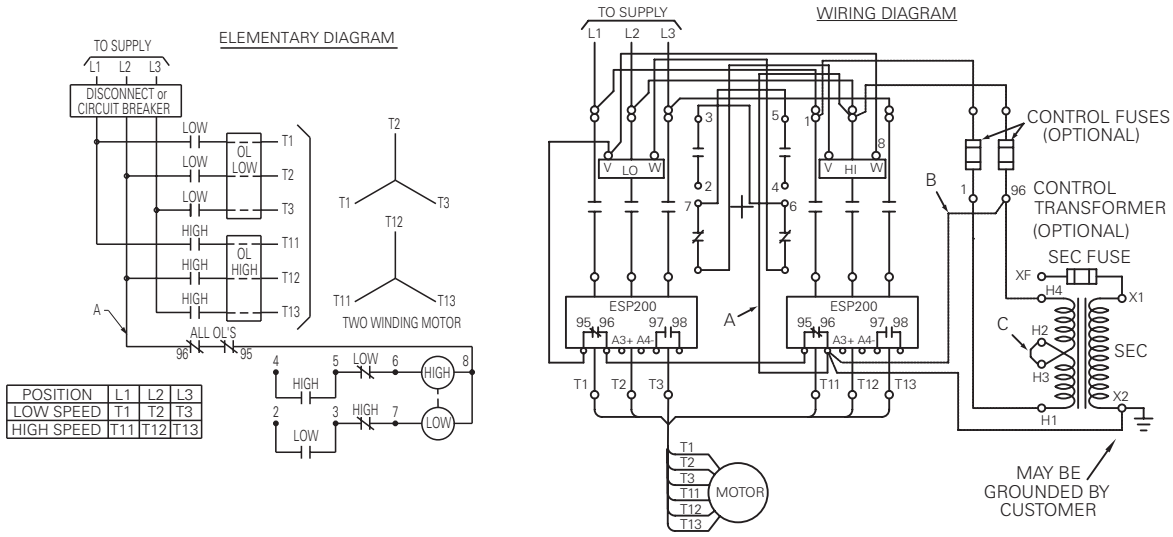

POSITION	L1	L2	L3
LOW SPEED	T1	T2	T3
HIGH SPEED	T11	T12	T13

D68786001

Note: For separate control voltage source, remove jumpers "A" and "B" and connect source to control fuse terminal. Remove jumper "C" if control transformer is used.

Part Winding

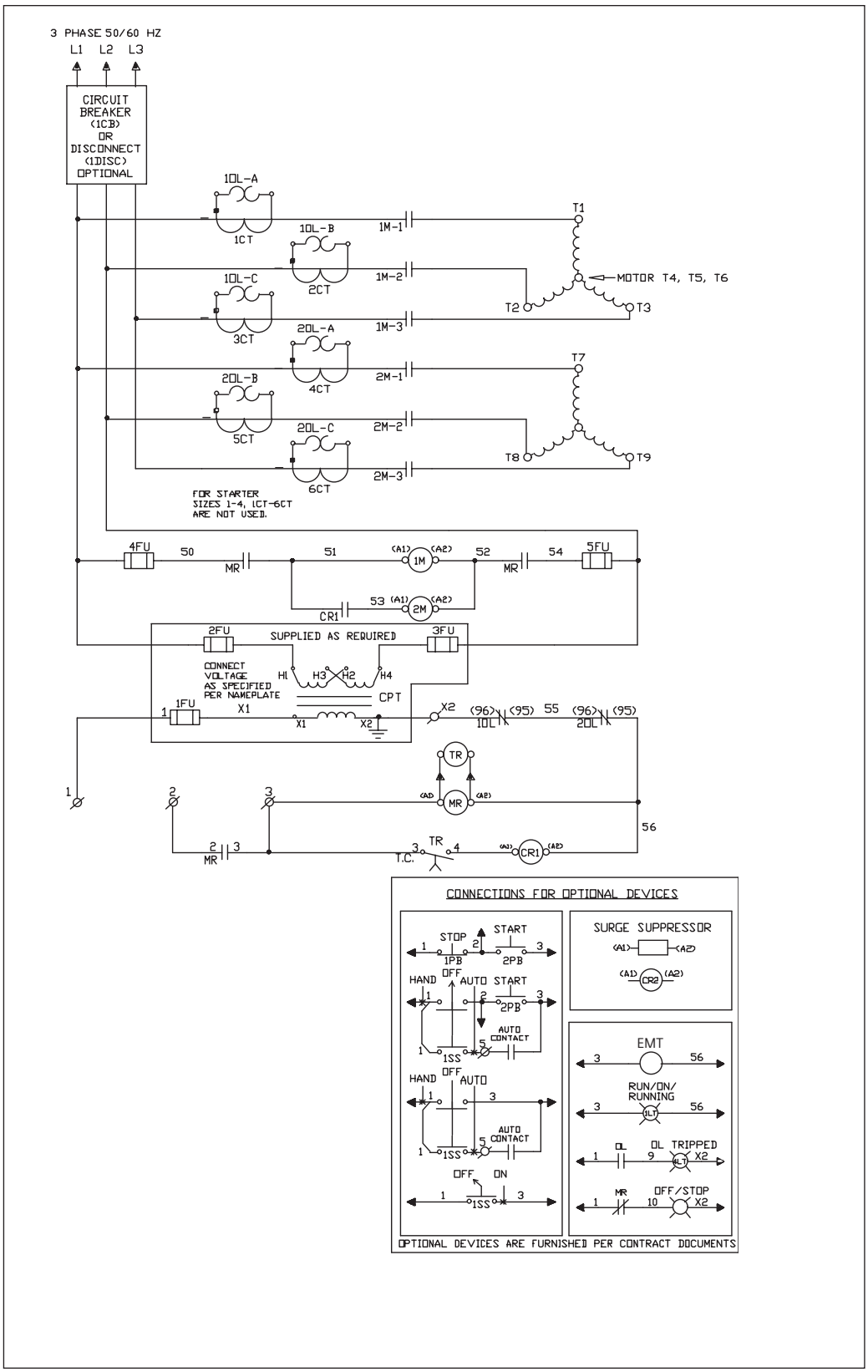

Auto Transformer

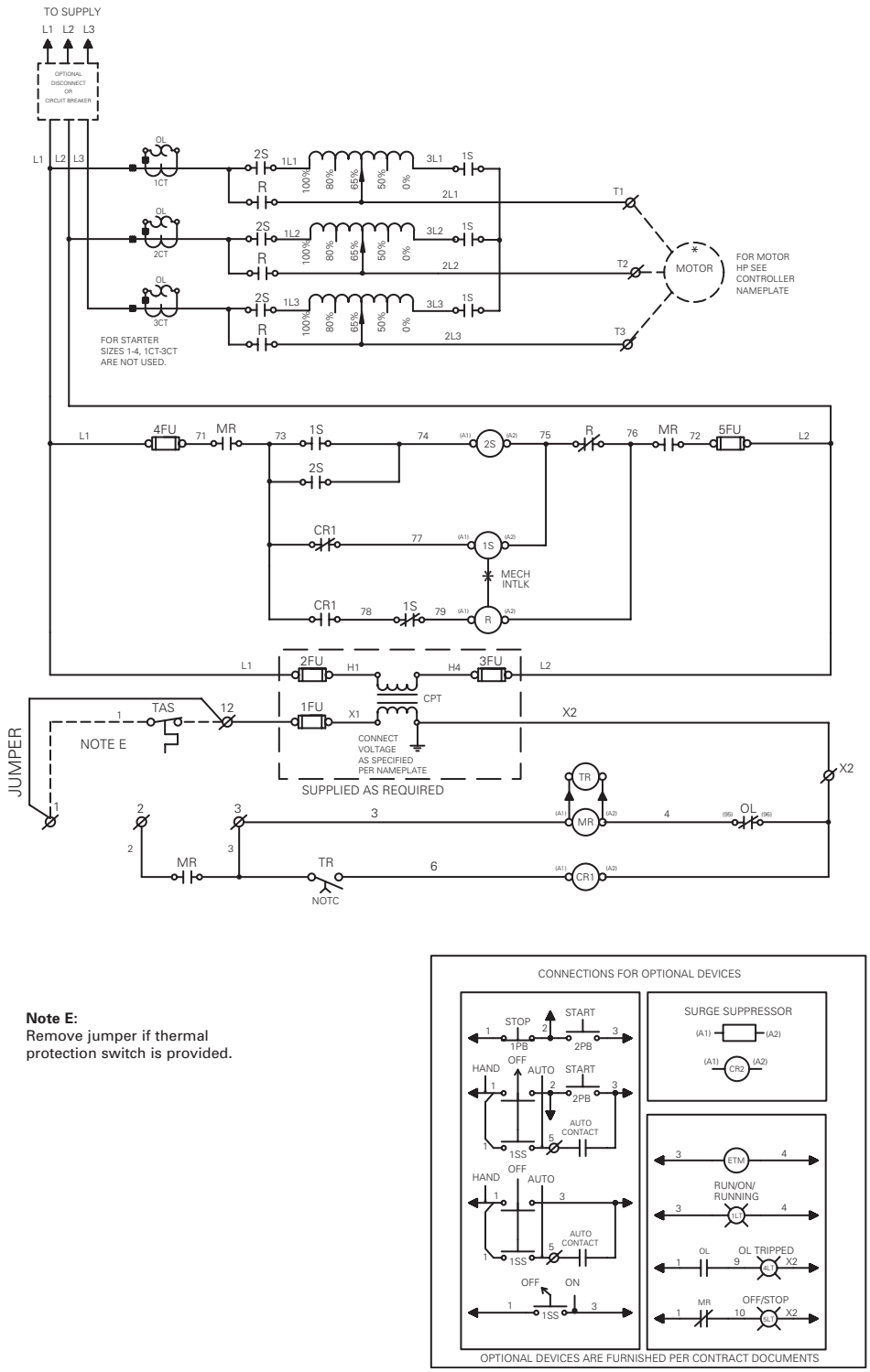

Note E:
Remove jumper if thermal protection switch is provided.

Wye Delta (Open Transition)

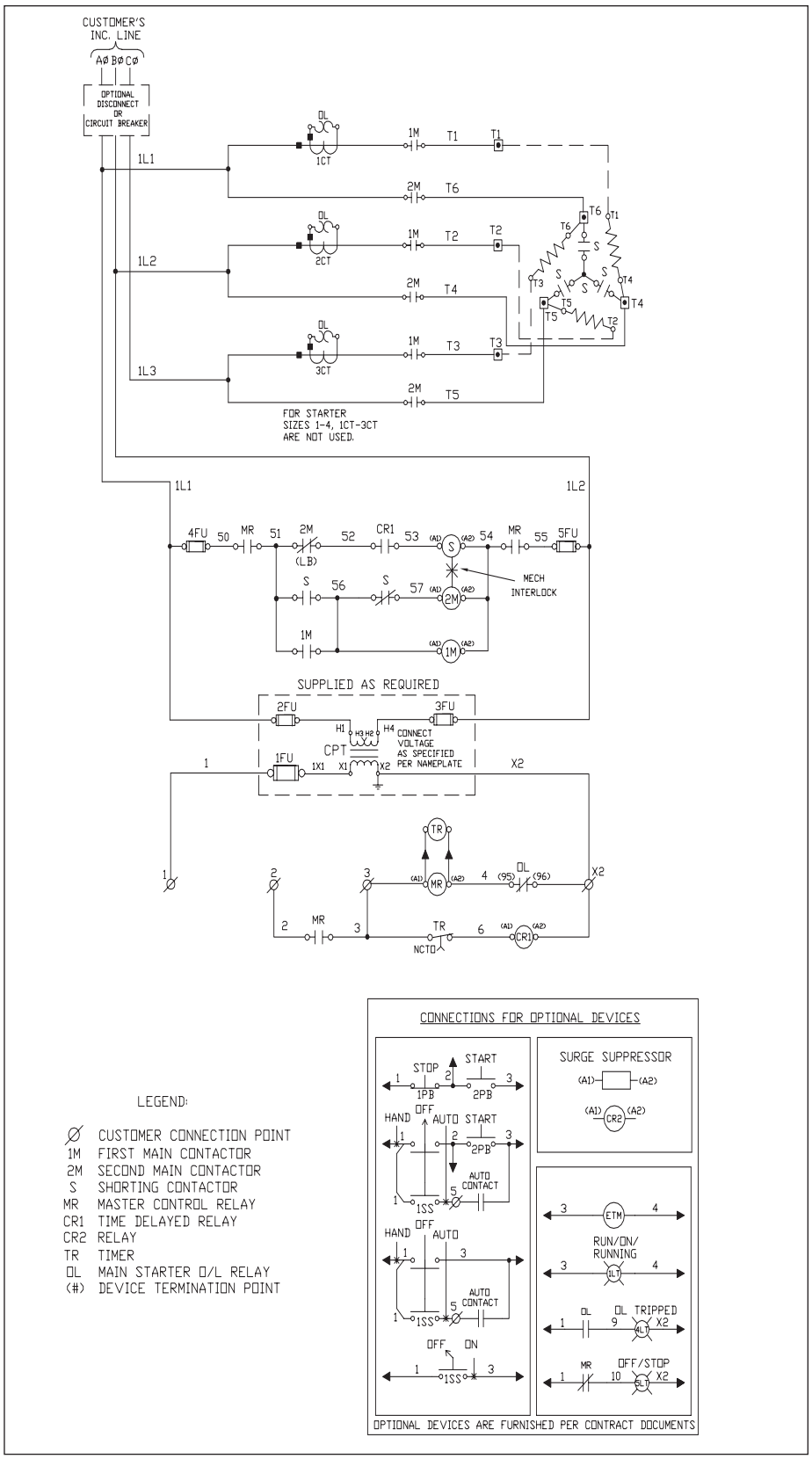

LEGEND:

- Ø CUSTOMER CONNECTION POINT
- 1M FIRST MAIN CONTACTOR
- 2M SECOND MAIN CONTACTOR
- S SHORTING CONTACTOR
- MR MASTER CONTROL RELAY
- CR1 TIME DELAYED RELAY
- CR2 RELAY
- TR TIMER
- OL MAIN STARTER O/L RELAY
- (#) DEVICE TERMINATION POINT

Wye Delta (Closed Transition)

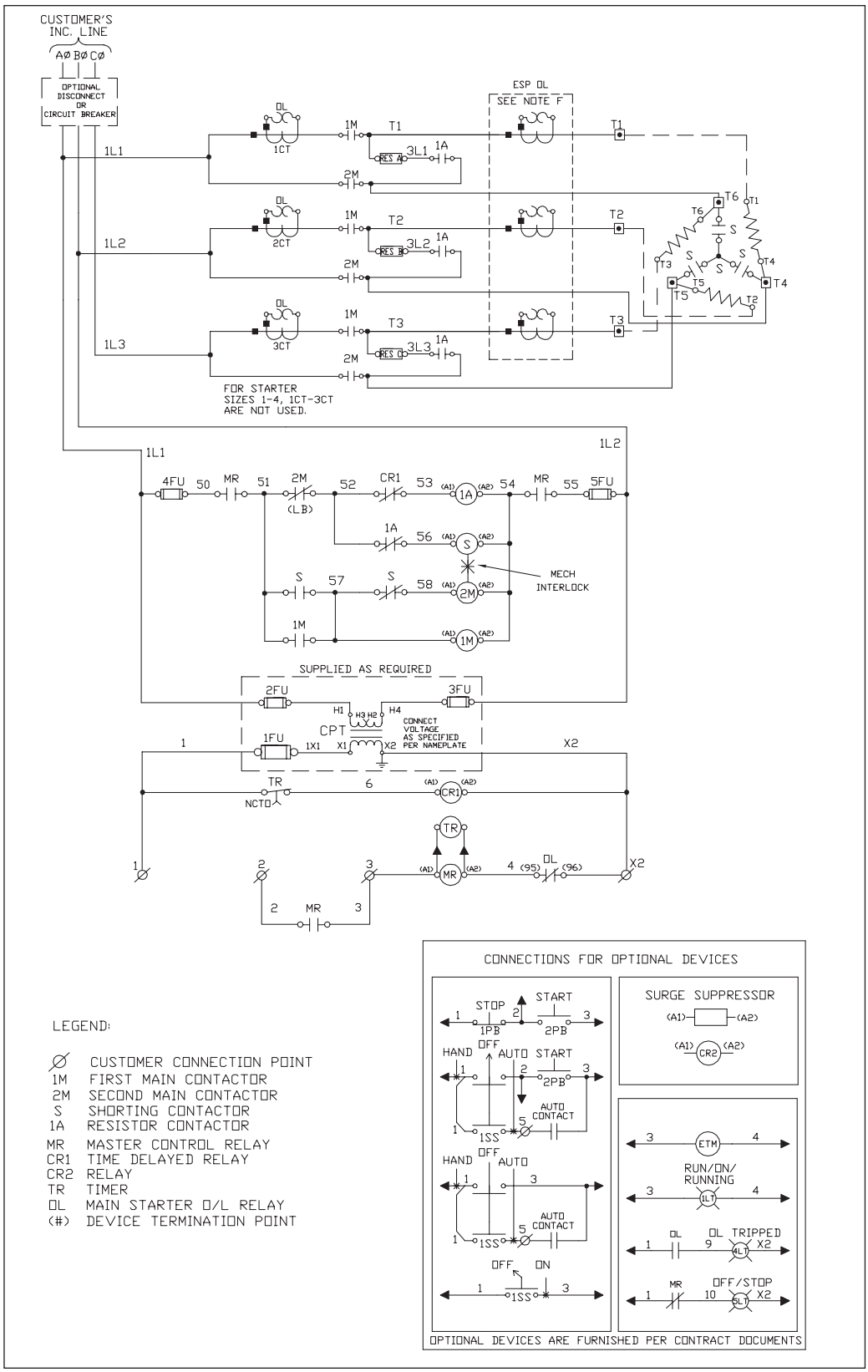

LEGEND:

- Ø CUSTOMER CONNECTION POINT
- 1M FIRST MAIN CONTACTOR
- 2M SECOND MAIN CONTACTOR
- S SHORTING CONTACTOR
- 1A RESISTOR CONTACTOR
- MR MASTER CONTROL RELAY
- CR1 TIME DELAYED RELAY
- CR2 RELAY
- TR TIMER
- OL MAIN STARTER O/L RELAY
- (#) DEVICE TERMINATION POINT

3-Phase Magnetic Contactors and Reversing Contactors

3-Phase Contactors—Size 00–4

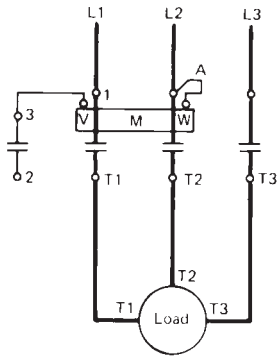

3-Phase Reversing Contactors—Size 00–4

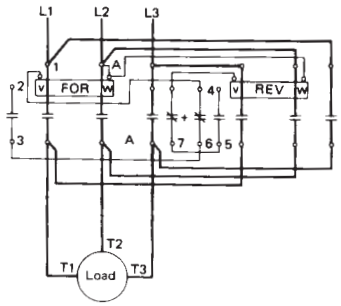

3-Phase Contactors—Size 5, 6

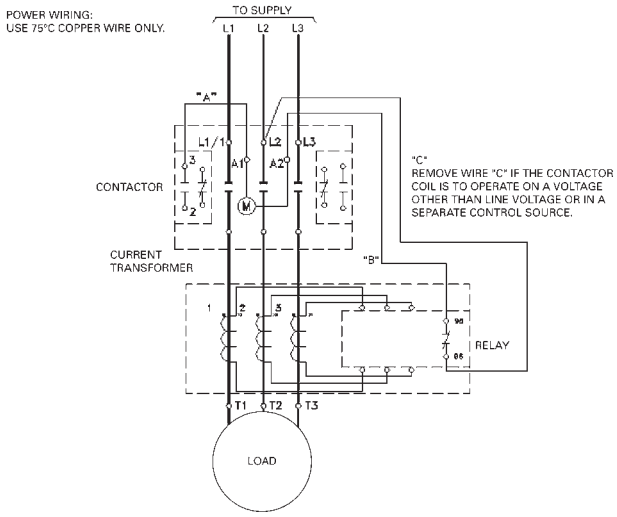

3-Phase Reversing Contactors—Size 5, 6

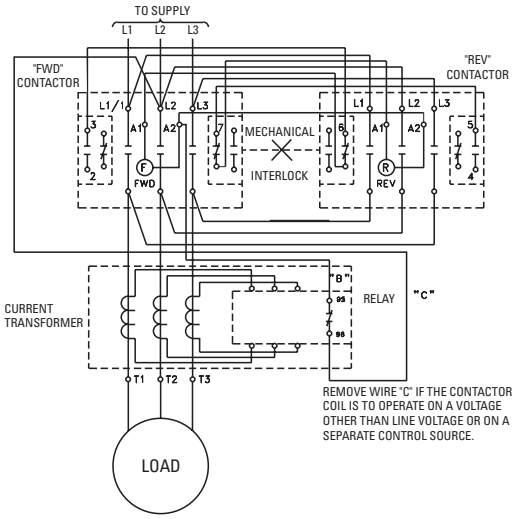

Single Phase Magnetic Contactors and Reversing Contactors

Single Phase Contactors—Size 00–4

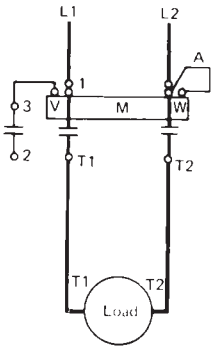

Single Phase Reversing Contactors—Size 00–1P

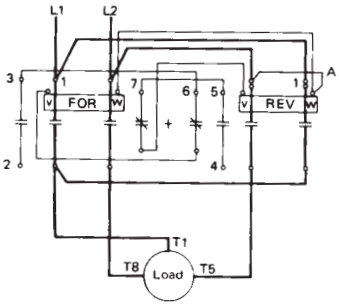

Standard Duplex Pump Panel (92)

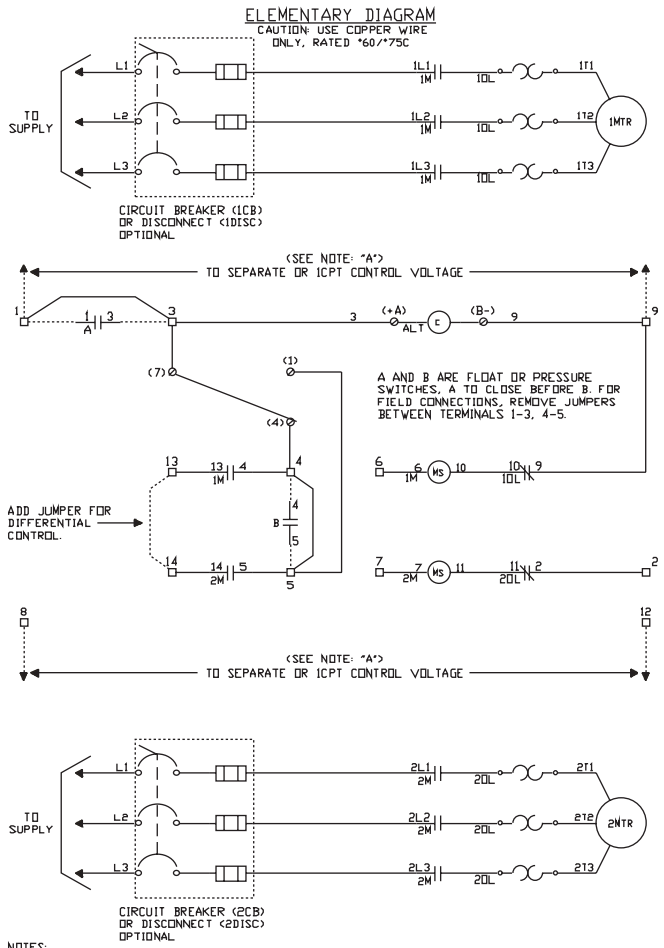

NOTES:

A. FOR SEPARATE OR CPT CONTROL VOLTAGE SOURCE: CONNECT PER DOTTED LINES OR TO 1 AND 2 CPT PRIMARIES PER FACTORY OR FIELD MODIFICATIONS.
B. FOR PROTECTION OF INTERNAL CONTROL CIRCUIT CONDUCTORS IN ACCORDANCE WITH THE N.E.C., USE FUSE KIT 49MAFB4.
C. TO USE THIS CONTROLLER W/O SELECTOR SWITCHES, JUMPER BETWEEN THE FOLLOWING PAIRS OF TERMINALS 4-6, 5-7, AND 9-2.
D. FOR TWO POSITION SELECTOR SWITCHES, WIRE AS SHOWN ALSO ADD JUMPER BETWEEN TERMINALS 9-2.
E. LINE OR SEPARATE SOURCE CONNECTIONS TO TERMINALS 8 AND 12 ARE REQUIRED ONLY WHEN THREE POSITION SELECTOR SWITCH IS BUILT IN.

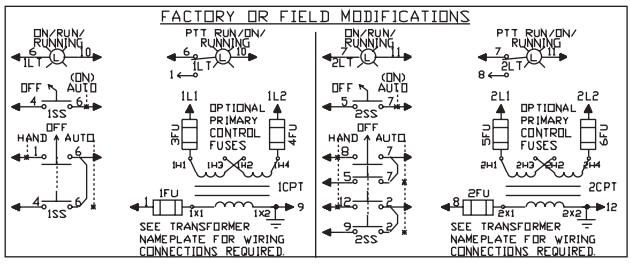

TB LAYOUT (REF)

1	2	3	4	5	6	7	8	9	12	13	14

Duplex Panel w/o alternator (95)

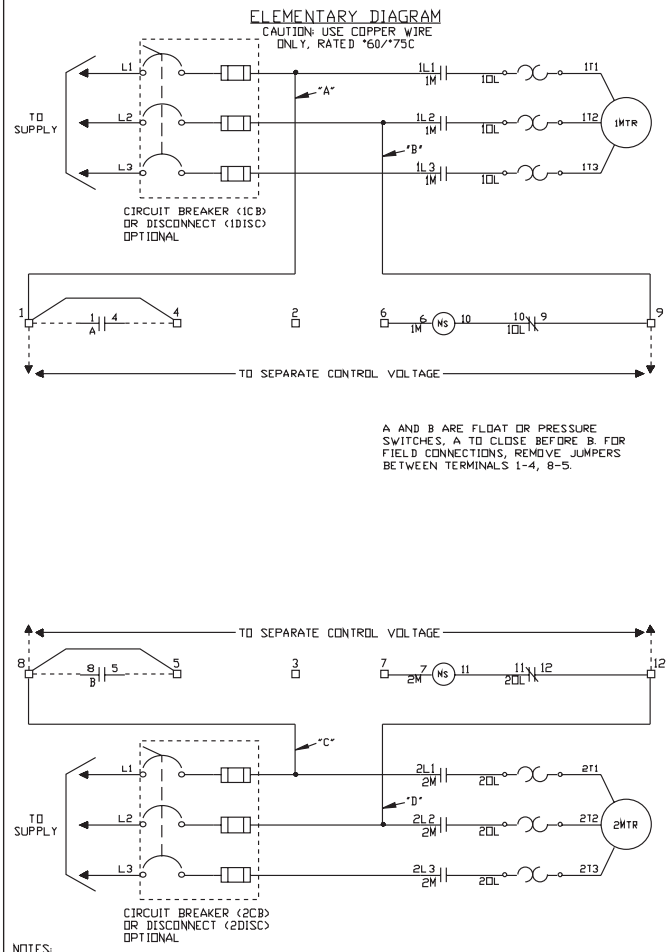

NOTES:

A. FOR SEPARATE OR CPT CONTROL VOLTAGE SOURCE, REMOVE JUMPERS "A","B","C", AND "D" AND CONNECT PER DOTTED LINES OR TO 1 AND 2 CPT PRIMARIES PER FACTORY OR FIELD MODIFICATIONS.
B. FOR PROTECTION OF INTERNAL CONTROL CIRCUIT CONDUCTORS IN ACCORDANCE WITH THE N.E.C., USE FUSE KIT 49MAFB4.
C. TO USE THIS CONTROLLER W/O SELECTOR SWITCHES, JUMPER BETWEEN THE FOLLOWING PAIRS OF TERMINALS 4-6, 5-7.

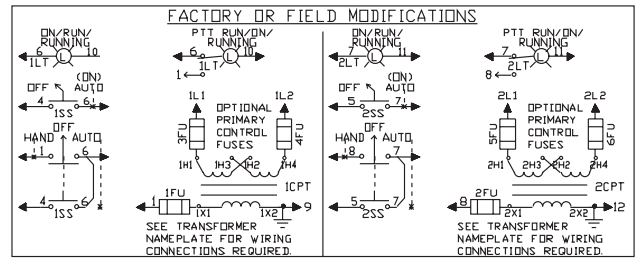

Duplex Panel with Relay Alternation (93)

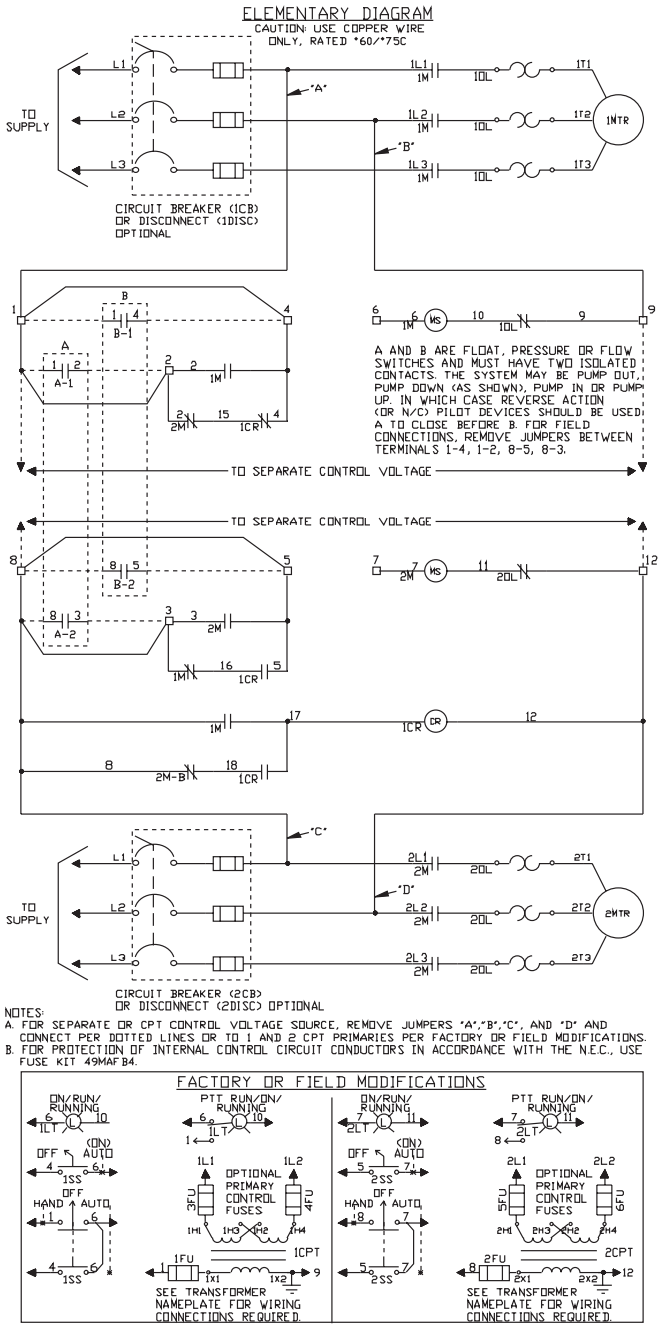

Duplex Panel with Lead Pump Transfer Switch (94)

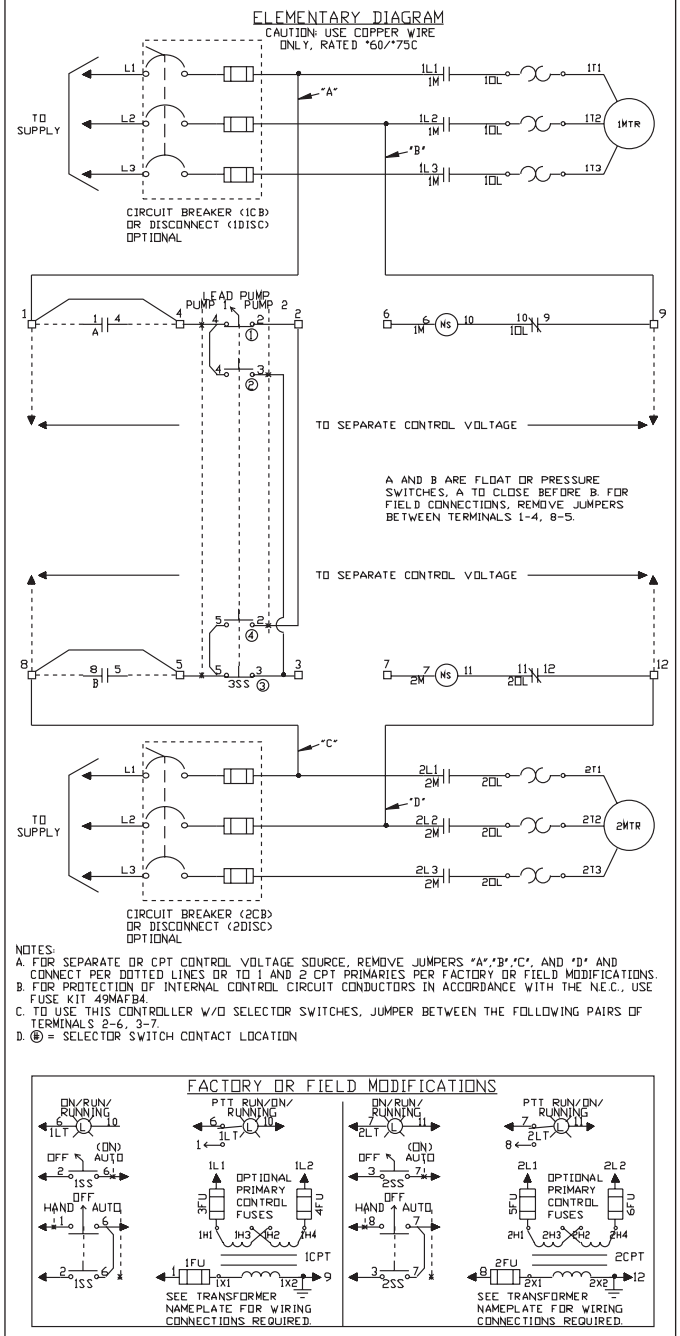

Class 82 Pump Panel

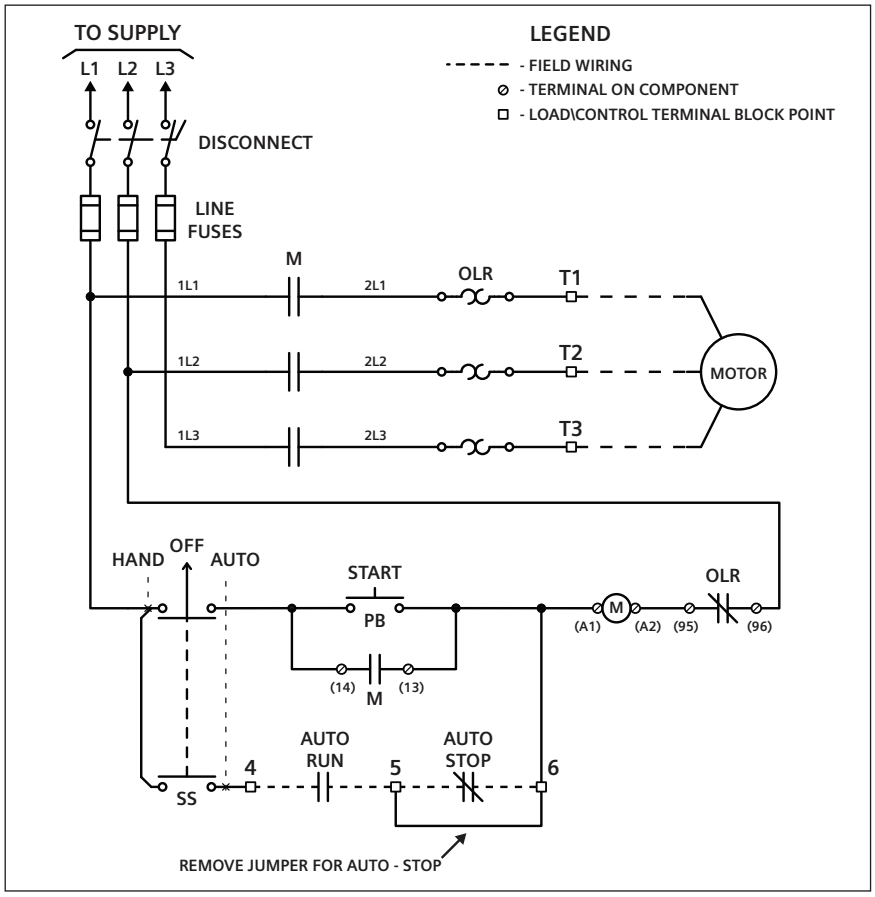

Standard Class 87 Pump Panel

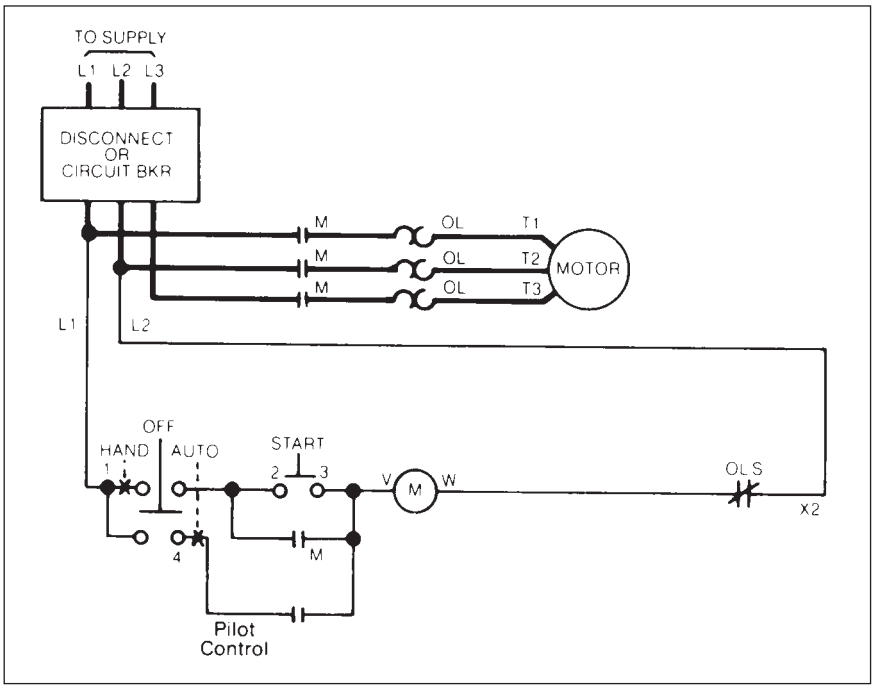

LEN00B003 (20A 3 Pole)

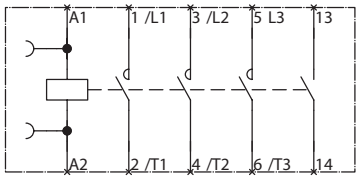

LEN00B004 (20A 4 Pole)

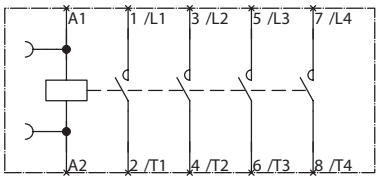

LEN00C003 (30A 3 Pole)

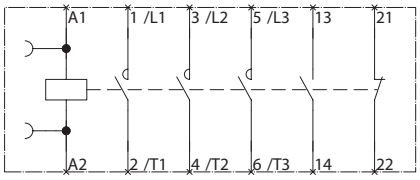

LEN00C004 (30A 4 Pole)

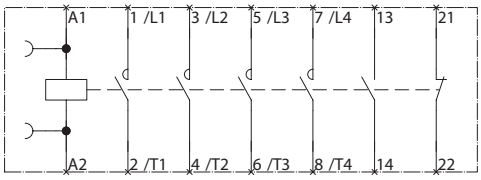

LEN00D003 (60A 3 Pole)
LEN00E003 (100A 3 Pole)

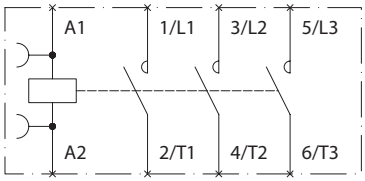

LEN00F003 (200A 3 Pole)
LEN00G003 (300A 3 Pole)
LEN00H003 (400A 3 Pole)

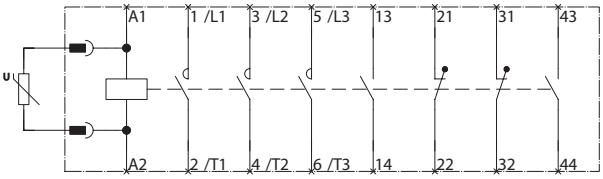

LCE00C (30A 2-12 Pole)

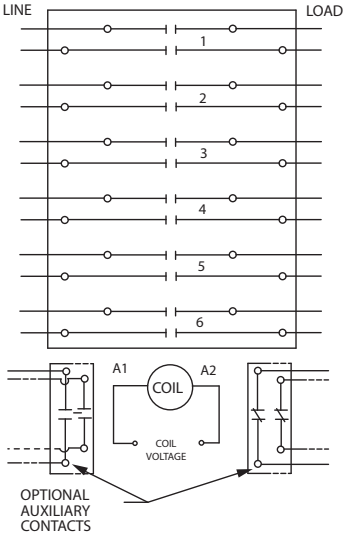

Optional Pilot Devices for Electrically Held Contactor

ON and OFF Push buttons

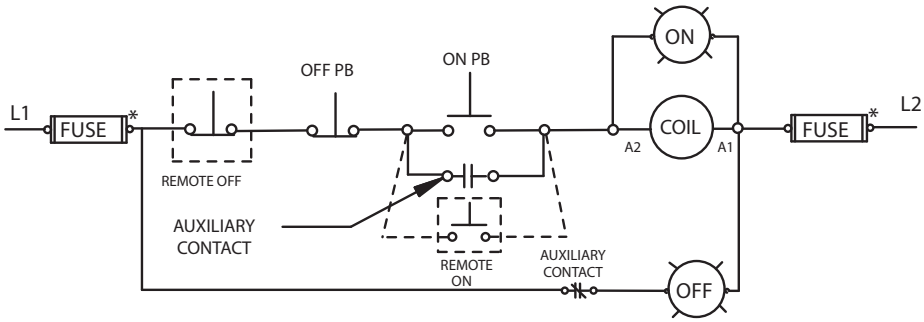

OFF-ON or OFF-AUTO Selector Switch

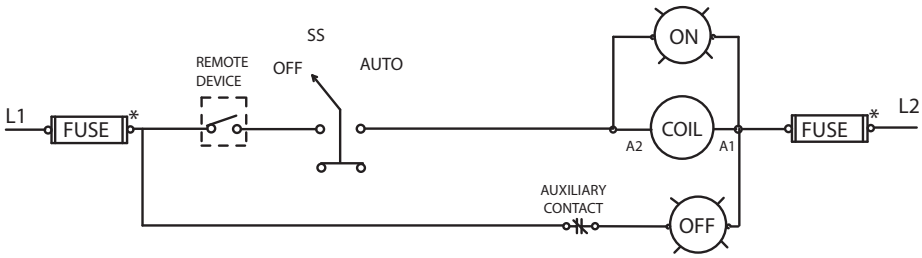

OFF-ON-AUTO HAND-OFF-AUTO Selector Switch

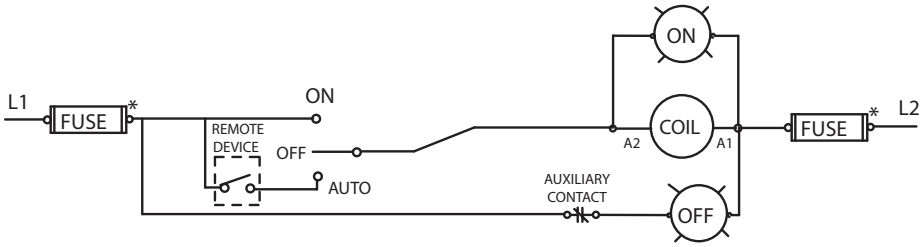

* -- IF USED

Class LC (converted to mechanically held)

Wiring Diagrams

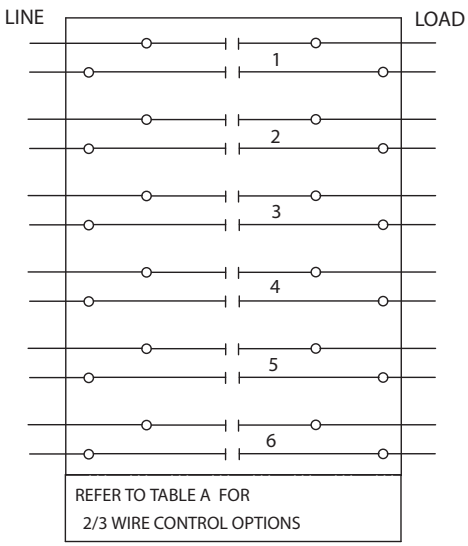

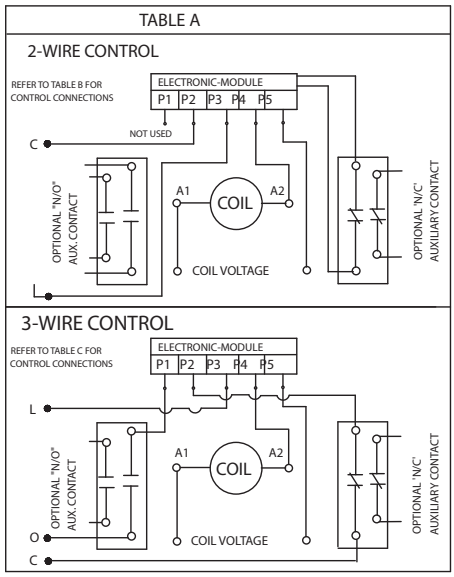

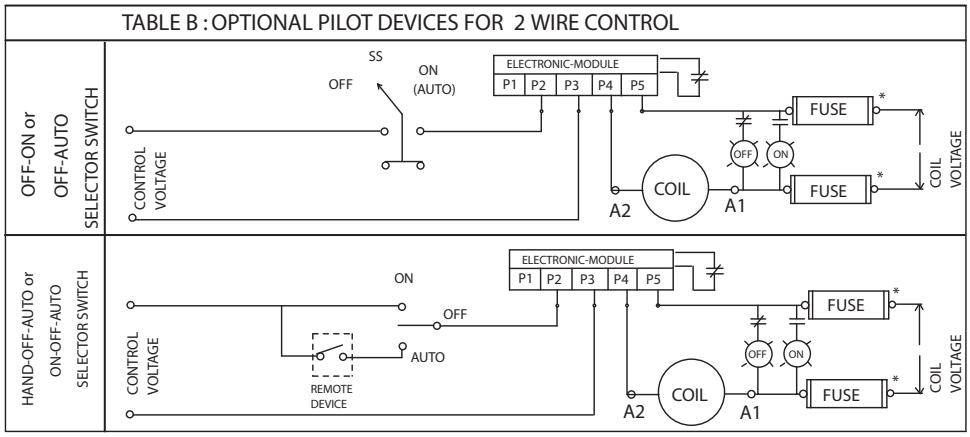

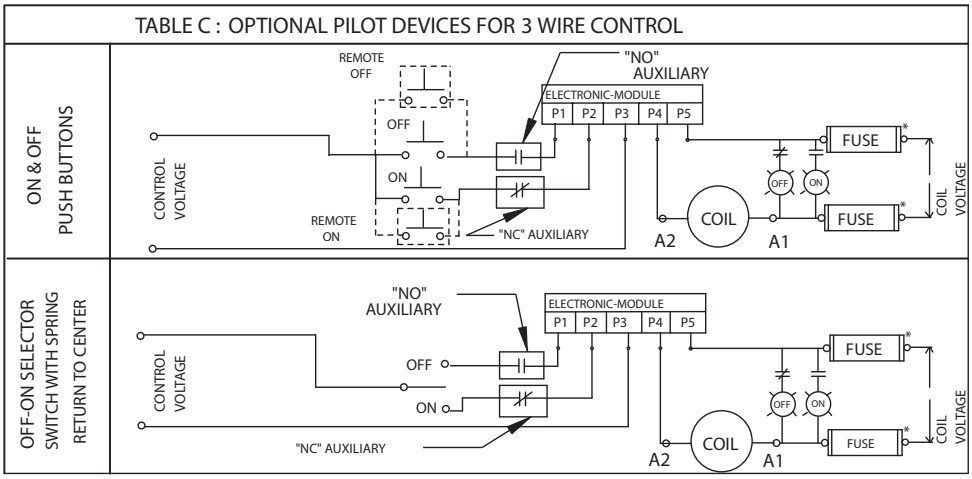

* -- IF USED

Mechanically Latched 20 Amp, Class CLM

Wiring Diagrams

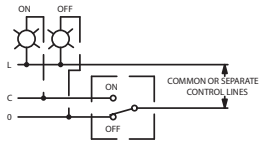

TYPICAL OFF-ON SELECTOR SWITCH

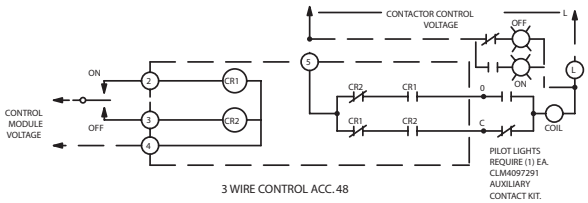

3 WIRE CONTROL ACC. 48

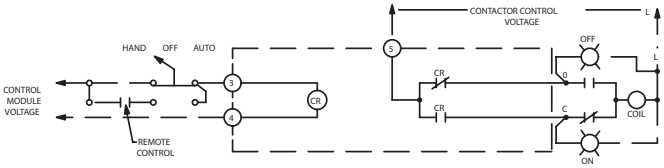

2 WIRE CONTROL ACC. 47

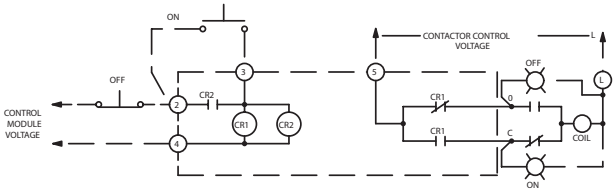

ON-OFF (FORM 3) CONTROL ACC. 49

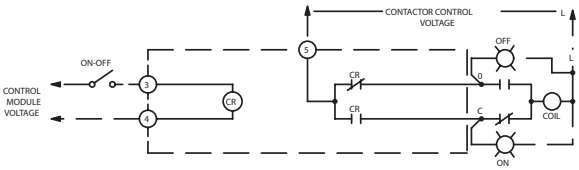

2 WIRE CONTROL ACC. 47

CONNECTIONS TO CONTROL MODULES	
MODULE TERMINAL	CONNECT TO:
1	NOT USED
2	CONT. STATION FOR ACC. 48 & 49
3	CONT. STATION FOR ACC. 47,48 & 49
4	MODULE CONTROL VOLTAGE *
5	CONTACTOR CONTROL VOLTAGE
O	TERMINAL O ON CONTACTOR
C	TERMINAL C ON CONTACTOR

* FOR 24 VDC CONTROL MODULES CONNECT TERMINAL 4 TO NEGATIVE (-)

Mechanically Latched 30-400 Amps, Class CLM

Wiring Diagrams

Mechanically Latched, CLM 30–200 Amps①

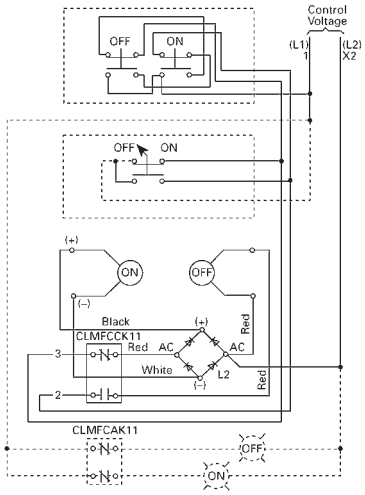

Connection Diagram for Common/Separate Control with Momentary Pushbutton or ON-OFF Selector Switch **CLMOC**, **CLMOD**, **CLMOE**, and **CLMOF**

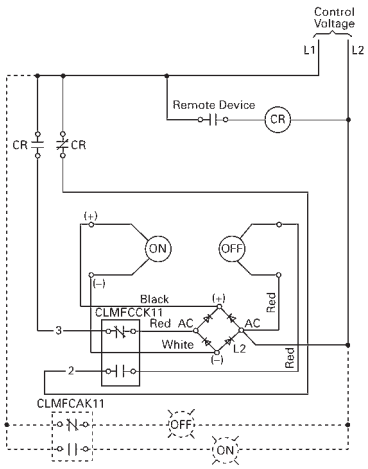

Connection for 2-Wire Control **CLMOC**, **CLMOD**, **CLMOE**, and **CLMOF**

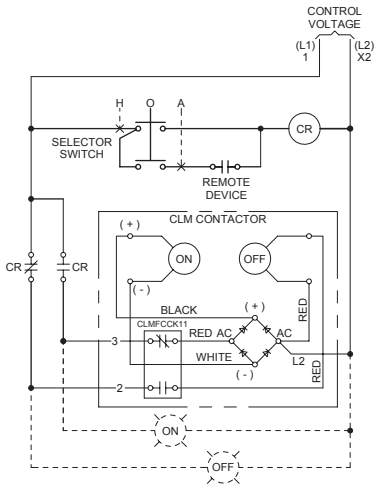

Connection for Hand/Off/Auto Control **CLMOC**, **CLMOD**, **CLMOE**, and **CLMOF**

Mechanically Latched Type CLM 300 and 400 Amp①

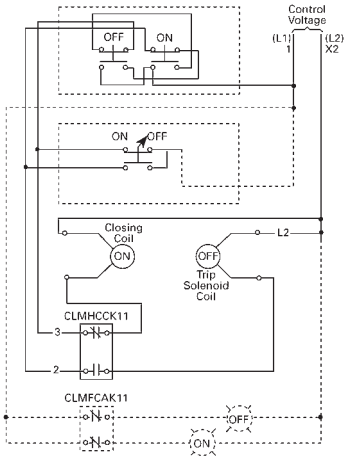

Connection Diagram for Common/Separate Control with Momentary Pushbutton or ON-OFF Selector Switch **CLMOG** and **CLMOH**

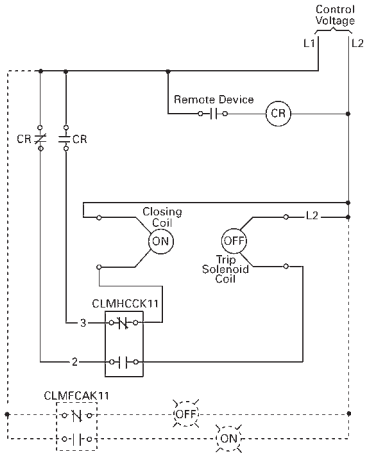

Connection for 2-Wire Control **CLMOG** and **CLMOH**

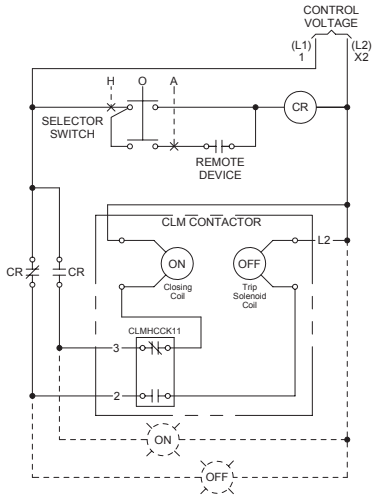

Connection for Hand/Off/Auto Control **CLMOG** and **CLMOH**

① Control relay is required for 2-wire and Hand/Off/Auto Control, as shown in diagram.

Wiring Diagrams

Voltage Letter A①③

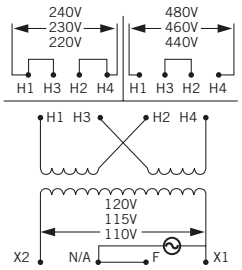

Voltage Letter B②③

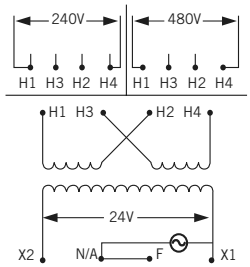

Voltage Letter C②③

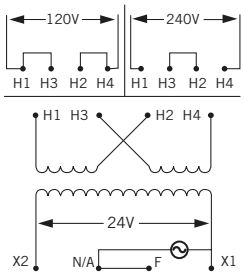

Voltage Letter D②

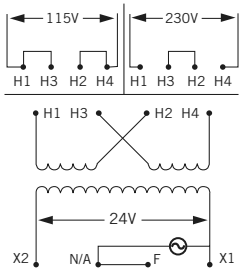

Voltage Letter E①③

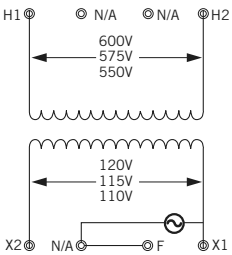

Voltage Letter F①

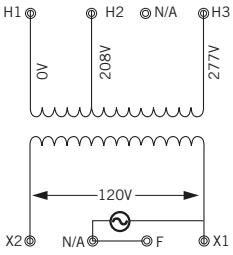

Voltage Letter G①

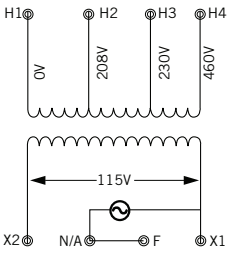

Voltage Letter H

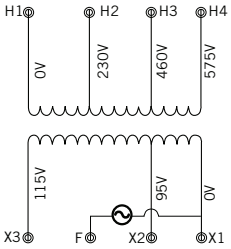

Voltage Letter I

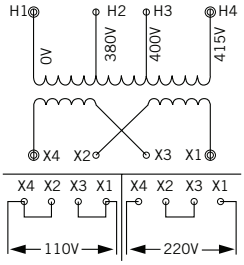

Voltage Letter J②③

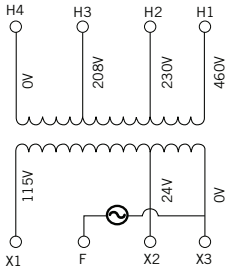

Voltage Letter L

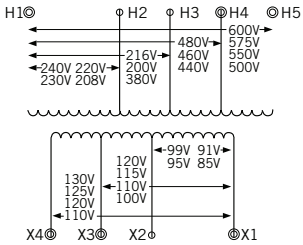

Voltage Letter M①

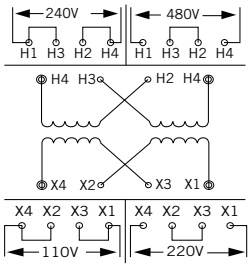

Voltage Letter P

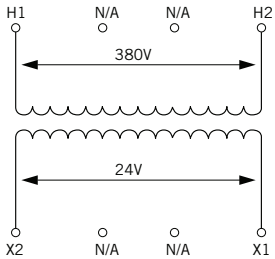

① Includes secondary fuse clips on sizes 50-750VA
② Includes secondary fuse clips on sizes 50-500VA
③ Secondary fuse clips are not included on MTG transformers.