SIMATIC

S7-1200 G2

Migration overview



Unrestricted © Siemens 2026 | SIMATIC S7-1200 G2 Migration overview

SIEMENS

Notes on the document

This document serves as a comprehensive guide for migrating from SIMATIC S7-1200 to the new generation SIMATIC S7-1200 G2. It is intended for customers who want to modernize existing automation solutions and take advantage of the benefits offered by the new controller generation.

- The document guides you step by step through the various migration options and highlights specific features and technical differences that need to be taken into account during the conversion.
- It also provides an initial overview of the SIMATIC S7-1200 G2 components currently available and shows how existing S7-1200 systems can be converted to the new generation.
- The document contains all relevant links to tools, support materials and further information, as well as contact details for additional support.



Unrestricted © Siemens 2026 | SIMATIC S7-1200 G2 Migration overview
SIEMENS

Content

01 | Information about the Product Phase-out of SIMATIC S7-1200 and portfolio roadmap

02 | Why you should Migrate to SIMATIC S7-1200 G2

03 | Migrate to S7-1200 G2 in 3 Easy Steps

03.1 | Step 1: Check Installation

03.2 | Step 2: Check Hardware Availability

03.3 | Step 3: Check Software Compatibility & Migration

04 | Demo – SIMATIC S7-1200 G2 Migration Tool

Appendix

A01 | Overview CPU Migration

A02 | Migration Recommendation – from S7-1200 to S7-1200 G2

A03 | Order Information – SIMATIC S7-1200 G2 Components

A04 | Operating Temperature Comparison

SIEMENS

Content

01 | Information about the Product Phase-out of SIMATIC S7-1200 and portfolio roadmap

02 | Why you should Migrate to SIMATIC S7-1200 G2

03 | Migrate to S7-1200 G2 in 3 Easy Steps

03.1 | Step 1: Check Installation

03.2 | Step 2: Check Hardware Availability

03.3 | Step 3: Check Software Compatibility & Migration

04 | Demo – SIMATIC S7-1200 G2 Migration Tool

Appendix

A01 | Overview CPU Migration

A02 | Migration Recommendation – from S7-1200 to S7-1200 G2

A03 | Order Information – SIMATIC S7-1200 G2 Components

A04 | Operating Temperature Comparison

SIEMENS

Information about the Product Phase-out of SIMATIC S7-1200
Basic Controller SIMATIC S7-1200 (G2)

Information about the product phase-out of SIMATIC S7-1200 components

The official announcement of discontinuation for the SIMATIC S7-1200 system (PM400 milestone) is scheduled for 01.11.2026.

This means:

- S7-1200 components are available as „new part“ around one year after announcement of discontinuation (until 01.10.2027)
- Afterwards, S7-1200 components will only be available as spare parts
- Ten years of spare part availability until 2036

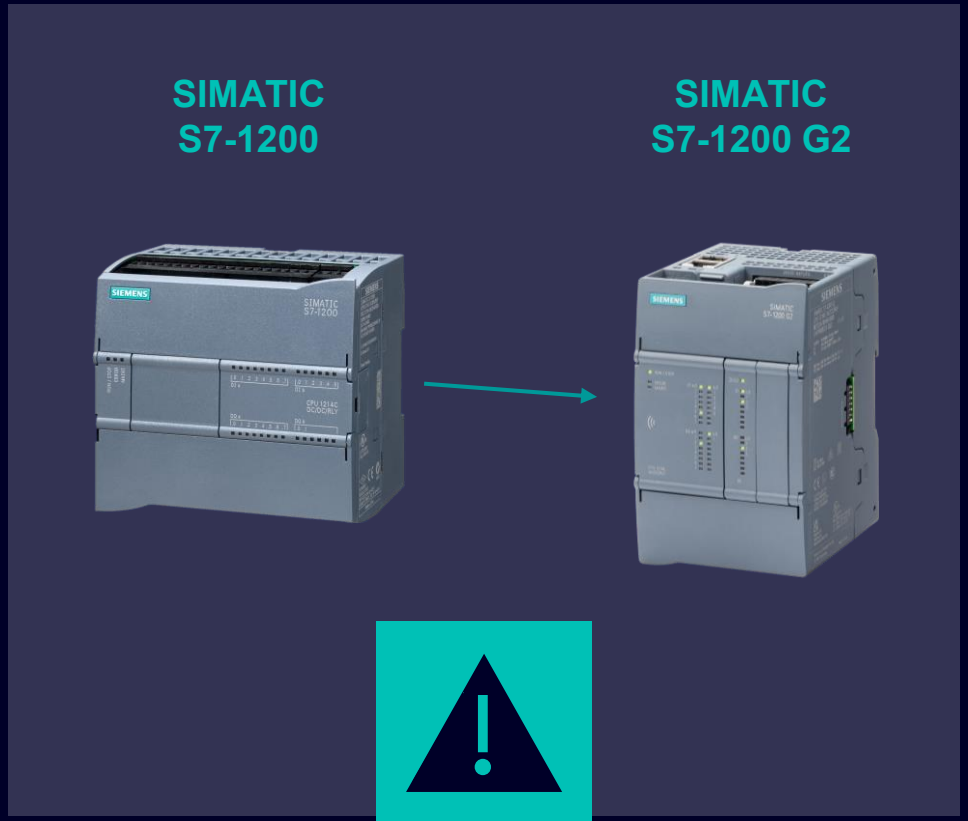

More information can be found here: SIOS - Product note

The new SIMATIC S7-1200 G2 system is the natural successor generation.

→ All future innovations will only take place in the S7-1200 G2 system

→ Continued use of current S7-1200 (G1) may limit compatibility with future technologies and evolving industry standards

Unrestricted © Siemens 2026 | SIMATIC S7-1200 G2 Migration overview
SIEMENS

Portfolio Roadmap
SIMATIC S7-1200 (G2)

Global product announcement

Hanover Fair April 24

Initial product release with TIA Portal V20

CPUs / Power supply

- CPU 1212C
- CPU 1212FC
- CPU 1214C
- CPU 1214FC
  with NFC iOS app
- PM 1207



Failsafe portfolio elements

First failsafe I/O module for at least 2 safety functions



Additional failsafe I/Os and special modules in 2026/2027

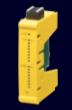





2024 | **2025** | **2026** | **2027**

Digital SM/SB

- SM 8DI/8DQ (+Relay)
- SM 16DI
- SM 16DQ (+Relay)
- SB 8DI, 8DQ, 4DI/4DQ

Analog SM/SB

- SM 8AI
- SM 8AQ
- SB 4AI, 4AQ, 2AI/2AQ

Further portfolio elements

First communication / temperature modules

- CM RS485 / RS232 / RS422
- CB RS485
- RTD SM 4AI
- TC: SM 8AI, SB 4AI
- CSM 1277



S7-1200 G2 additions

Additional modules and software functions

- SM 1223 16DI/16DQ
- BB 1297
- CP 1243-1
- NFC Android app
- S7-PLCSIM Advanced support
- OPC UA server



Announcement of discontinuation for SIMATIC S7-1200

Product cancellation for SIMATIC S7-1200

*Current planning status of the portfolio roadmap

Unrestricted © Siemens 2026 | SIMATIC S7-1200 G2 Migration overview

SIEMENS

Content

01 | Information about the Product Phase-out of SIMATIC S7-1200 and portfolio roadmap

02 | Why you should Migrate to SIMATIC S7-1200 G2

03 | Migrate to S7-1200 G2 in 3 Easy Steps

03.1 | Step 1: Check Installation

03.2 | Step 2: Check Hardware Availability

03.3 | Step 3: Check Software Compatibility & Migration

04 | Demo – SIMATIC S7-1200 G2 Migration Tool

Appendix

A01 | Overview CPU Migration

A02 | Migration Recommendation – from S7-1200 to S7-1200 G2

A03 | Order Information – SIMATIC S7-1200 G2 Components

A04 | Operating Temperature Comparison

The Future of Basic Automation
Why you should migrate to SIMATIC S7-1200 G2

Benefit from more cost-effectiveness, more productivity and more flexibility with

Enhanced Performance and Scalability
More processing and data communication performance, larger memory and more flexible adaption to complex machine concepts.

Efficient Motion Control
High-precision motion control of complex motion sequences with simplified configuration using motion control technology objects



Flexible Machine Safety
Cost-optimized fail-safe hardware portfolio with integrated safety engineering for flexible machine safety concepts and operating modes

Increased Data Transparency
Wireless data access thanks to NFC functionality and web API, supported by a modernized web server for effortless diagnostics, operation and maintenance.

Seamless **integration into the TIA portfolio** and **compliance with modern Cybersecurity standards** such as IEC 62443-4-2 ensure compatibility with evolving technologies and industry requirements – securing **long-term investment protection** and sustainable innovation.

SIEMENS

From Proven to Performant – From S7-1200 to S7-1200 G2
Technical advantages at a glance

	S7-1200	S7-1200 G2
NFC functionality	No	Yes
Web API	Subset	Full support
DHCP/DNS	No	Yes
Motion Control	Basic (only single axes)	Enhanced (coordinated axes and kinematics)
PROFINET IRT	No	Yes
Number of PN devices	16	31
Processing unit	Single-core (serial processing)	Multi-core (parallel processing)
Program scalability	Limited	Highly compatible (same instructions as with S7-1500)
Wiring concept	Screw terminals	Push-in terminals
DIN Rail Space	90 – 150 mm (from CPU 1211 to CPU 1217)	70 mm/80 mm (CPU 1212/CPU 1214)
Signal board slots	1 for all CPUs	1 (CPU 1212) 2 (CPU 1214)
Memory	75 – 150 kB RAM for program and data (CPU 1211/1212) 150 – 250 kB RAM for program and data (CPU 1214/1215/1217)	150/200 kB RAM program – 500 kB RAM data (CPU 1212) 250/300 kB RAM program – 750 kB RAM data (CPU 1214)

SIEMENS

Content

01 | Information about the Product Phase-out of SIMATIC S7-1200 and portfolio roadmap

02 | Why you should Migrate to SIMATIC S7-1200 G2

03 | Migrate to S7-1200 G2 in 3 Easy Steps

03.1 | Step 1: Check Installation

03.2 | Step 2: Check Hardware Availability

03.3 | Step 3: Check Software Compatibility & Migration

04 | Demo – SIMATIC S7-1200 G2 Migration Tool

Appendix

A01 | Overview CPU Migration

A02 | Migration Recommendation – from S7-1200 to S7-1200 G2

A03 | Order Information – SIMATIC S7-1200 G2 Components

A04 | Operating Temperature Comparison

SIEMENS

Migrate to S7-1200 G2 in 3 Easy Steps

Migration from S7-1200 to S7-1200 G2 is designed to be straightforward with **high compatibility in engineering** and **hardware interfaces**.
We support you with **tools**, **documentation** and **expert guidance** for a smooth transition, as we know **engineering standardization** and **cost-efficient lifecycle support** are crucial for **future-proof automation systems**.



SIMATIC S7-1200

SIMATIC S7-1200 G2



Migrate to S7-1200 G2 in 3 Easy Steps:

Step 1: Check Installation

The dimensions and connection positions have changed. Check the installation options in the control cabinet.

Step 2: Check Hardware Availability

Most of the known modules from the S7-1200 family are already available for S7-1200 G2. Check whether special modules are required and already available.

Support tool (TIA Add-In) available

Step 3: Check Software Compatibility & Migration

SIMATIC S7-1200 G2 offers high software compatibility with S7-1200 and includes several modernized software elements. Check whether any instructions need to be adapted.

Support tool (TIA Add-In) available

SIEMENS

Step 1
Check Installation

The dimensions and connection positions have changed with the SIMATIC S7-1200 G2 family. Check the installation possibilities in the control cabinet with regard to space requirements and handling options.



SIEMENS

Step 1: Check Installation
Comparison of dimensions

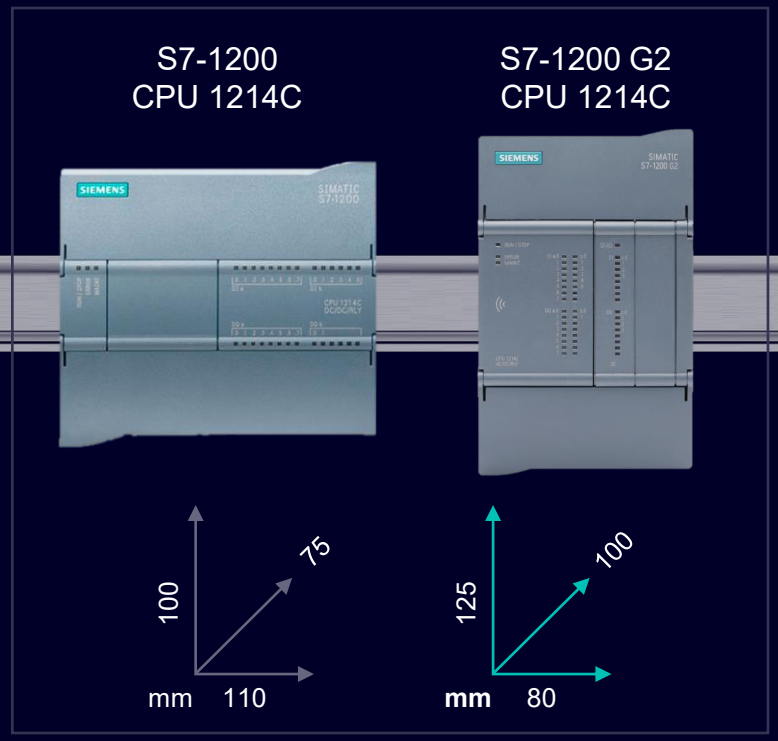

27% less space (DIN rail)

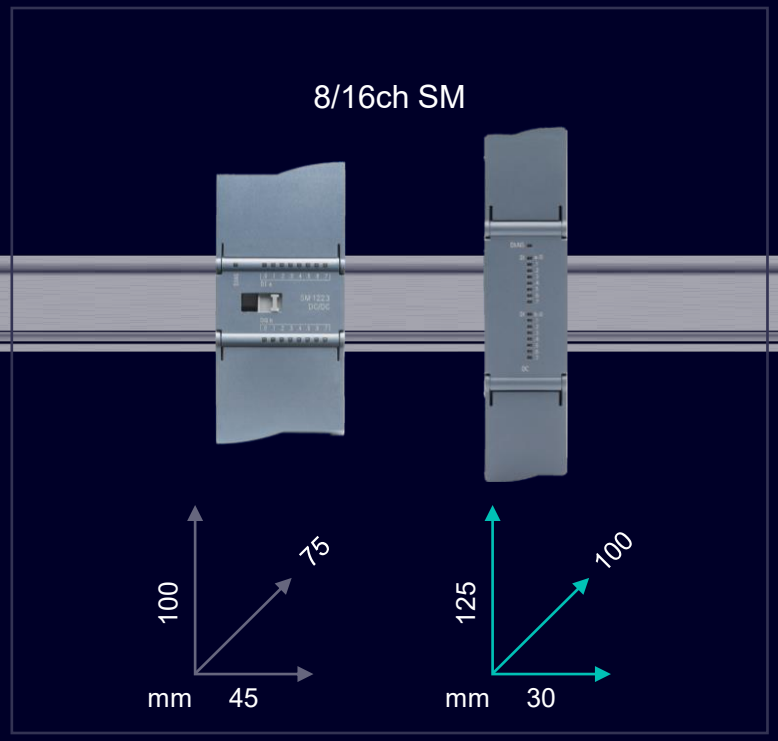

33% less space (DIN rail)

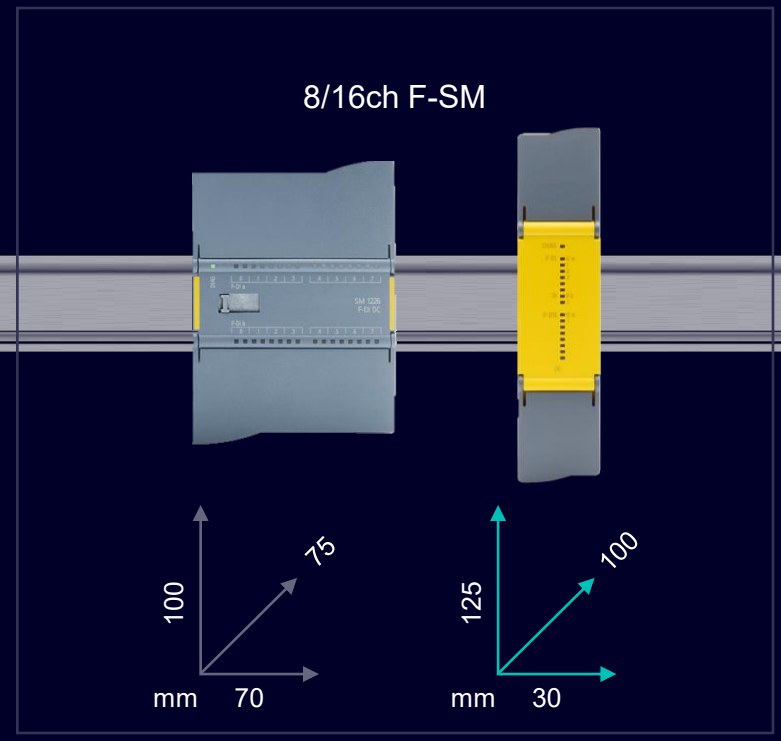

57% less space (DIN rail)

SIMATIC S7-1200 G2 is especially designed for **improved space efficiency** on the DIN rail with a smaller installation width

SIEMENS

Step 1: Check Installation
New dimensions in the control cabinet

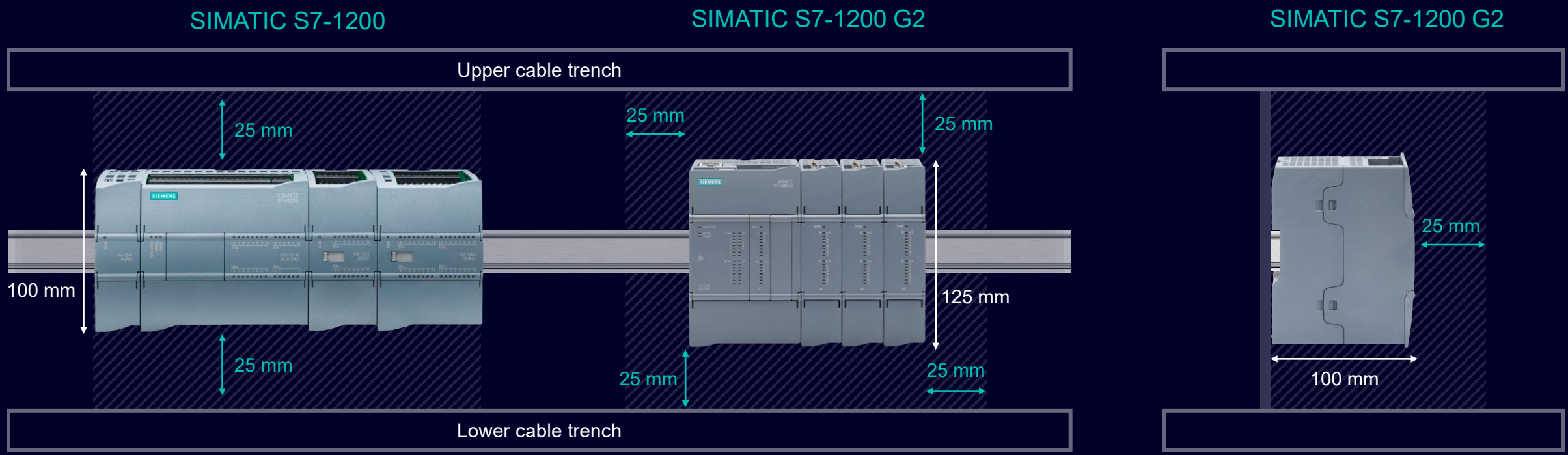

Note the increased height and distance rules* around the PLC station

Note the increased installation depth

*For operating temperature ranges above 40 °C, please refer to the operating temperature comparison in the appendix

Unrestricted © Siemens 2026 | SIMATIC S7-1200 G2 Migration overview
SIEMENS

Step 1: Check Installation
Positioning of ports, handling and wiring comparison

SIMATIC S7-1200 G2

1. PROFINET interface with two ports (on the top of the CPU)
2. Memory card slot (behind the door)
3. Removable push-in input connector (behind the door)
4. Status LEDs for the CPU
5. Status LEDs for the on-board I/O
6. Optional plug-in expansion board
7. Removable push-in output connector (behind the door, on the bottom of the CPU)
8. Power connector (behind the door, on the bottom of the CPU)

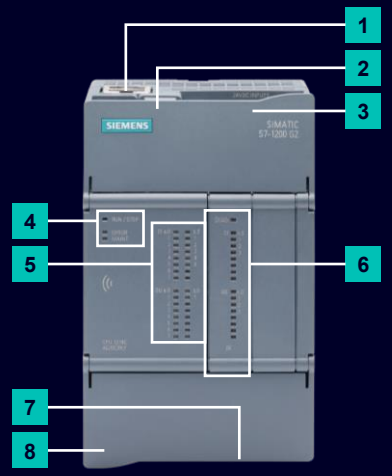

SIMATIC S7-1200 “classic”

1. PROFINET interface with 1 or 2 ports (on the bottom of the CPU)
2. Memory card slot (behind the door)
3. Removable input connector (behind the door)
4. Status LEDs for the CPU
5. Status LEDs for the on-board I/O
6. Optional plug-in expansion board
7. Removable output connector (behind the door, on the bottom of the CPU)
8. Power connector (behind the door, on the top of the CPU)

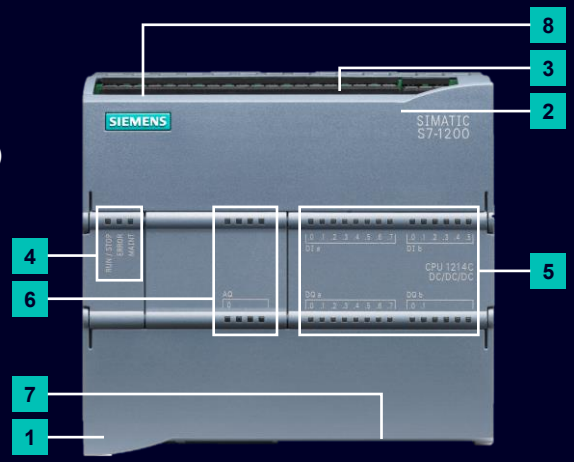

Note the change in the position of the power connector and the ethernet ports

Unrestricted © Siemens 2026 | SIMATIC S7-1200 G2 Migration overview
SIEMENS

Step 1: Check Installation
Wiring comparison and recommendations

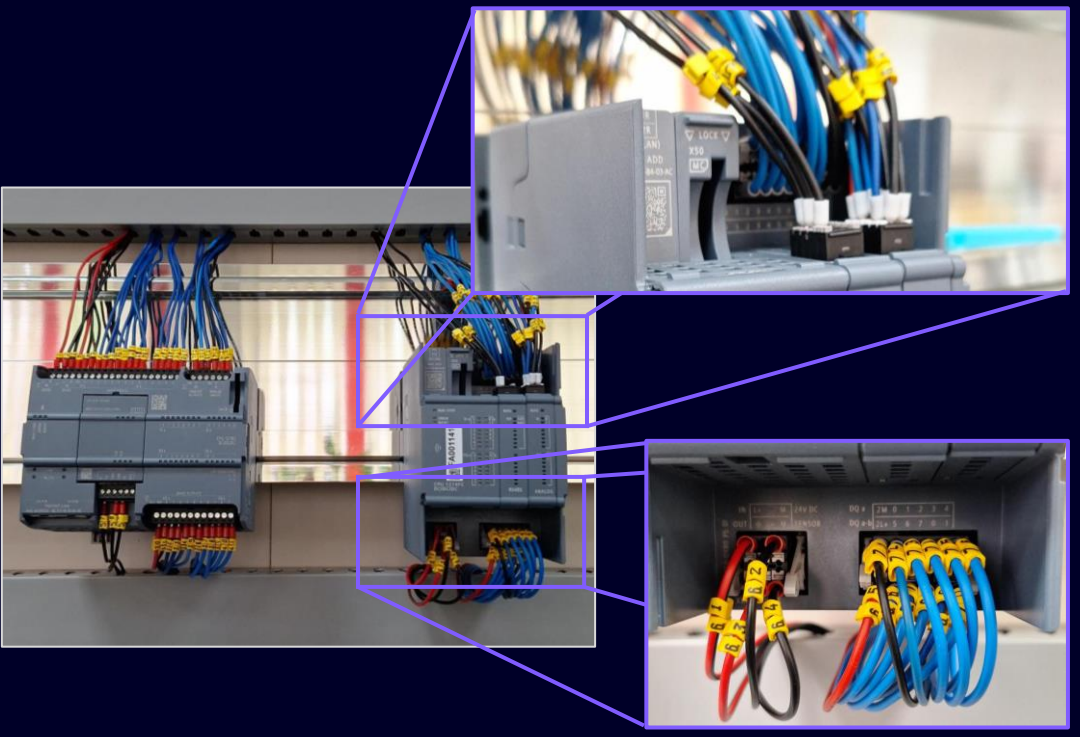

	S7-1200	S7-1200 G2
Wiring terminals	In line	As per terminal block
Terminal type	Screw terminals	Push-In terminals
Electrical inspection with test probe	Direct at screw terminal	Dedicated probe contact in terminal block
Wire density	Low	High

Recommendations to wire Signal Boards

Cable size	0.3 mm² to 2 mm² (22 AWG[1] to 14 AWG)	0.2 mm² to 0.8 mm² (24 AWG to 18 AWG)
Ferrule size	0.3 mm² to 2 mm² (22 AWG[1] to 14 AWG)	0.25 mm² or 0.34 mm² (24 AWG or 22 AWG)
	*acc. to used wire size	*limits the usable wire size

Note: Always check the user manual and use the wiring recommendations

1 AWG = American Wire Gauge

SIEMENS

Step 1: Check Installation
Overview and advantages

SIMATIC S7-1200



Check your existing installation environment with regard to

- ✓ Space requirements and dimensions
- ✓ Connection positions
- ✓ Wiring requirements

… and, if necessary, adapt to it accordingly.

SIMATIC S7-1200 G2



Your benefits:

- \+ Dual ethernet ports
- \+ Reduced DIN rail footprint
- \+ Up to two signal boards on the CPU
- \+ High(er) density terminal blocks
- \+ Push-in wiring

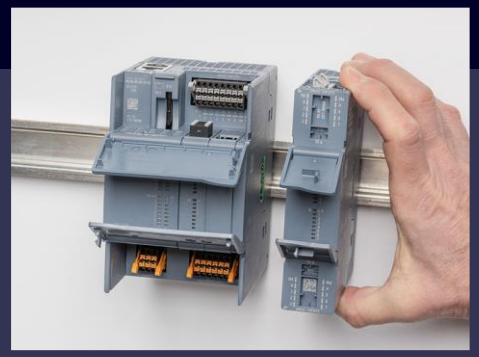

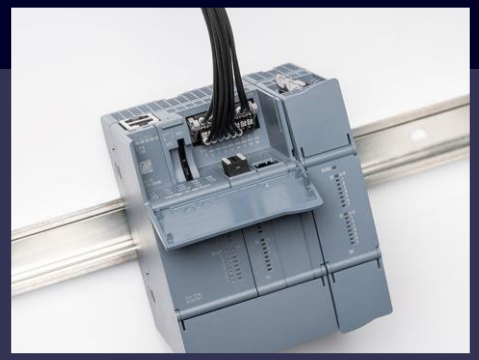





Unrestricted © Siemens 2026 | SIMATIC S7-1200 G2 Migration overview

SIEMENS

Step 2
Check Hardware Availability

Most of the known modules from the S7-1200 family are already available for S7-1200 G2. Check whether special modules are required and whether necessary components for your application are already available.



Unrestricted © Siemens 2026 | SIMATIC S7-1200 G2 Migration overview
SIEMENS

Step 2: Check Hardware Availability
Choose one options (A or B)

A | Check the hardware availability manually

☐ **Check the migration recommendation for all available modules in the appendix, or**

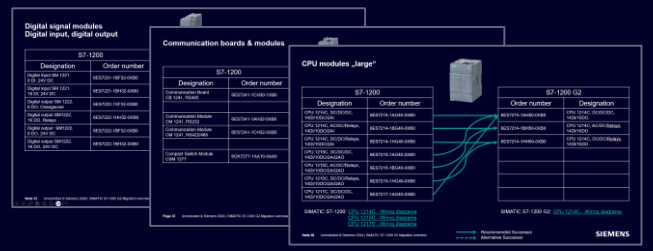

☐ **Check the order information in the appendix**

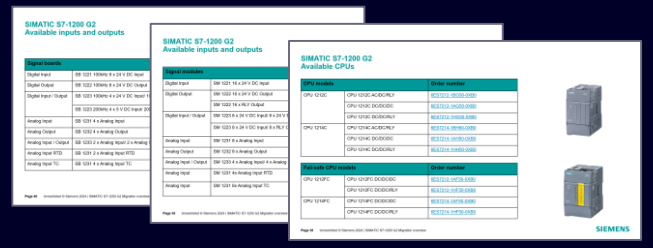

You can also configure available S7-1200 G2 hardware components directly in the TIA Selection Tool and order them on SiePortal.

B | Download and install the Migration Tool for TIA Portal (TIA Add-In)

☐ **Check hardware availability automatically with migration tool:**

The tool checks hardware compatibility before migration and verifies availability of components in the current TIA Portal version.

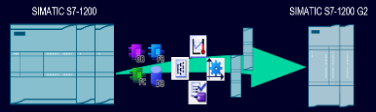

The SIMATIC S7-1200 G2 migration tool consists of

1. **Migration Checker** (checks hardware/software compatibility)
2. **Migration Tool** (performs automatic hardware/software migration)

SIMATIC S7-1200 G2 Migration Tool

- Lists recommendations for the migration of S7-1200
- Performs automatic project migration of hardware and software elements
- Generates detailed log-files with issues and recommendations

The download for the tool and further information, including explanatory videos and the detailed migration guideline can be found on SiePortal.

SIEMENS

Step 2: Check Hardware Availability
Overview and advantages

SIMATIC S7-1200



Compare your current hardware setup with the availability of S7-1200 G2 components

- ✓ manually, or
- ✓ with the help of the SIMATIC S7-1200 G2 migration tool

before **Step 3:**
Check Software Compatibility & Migration

SIMATIC S7-1200 G2



Your benefits:

- \+ Trusted for 10+ years: SIMATIC S7-1200
- \+ S7-1200 G2 generation: smarter, leaner, just as capable
- \+ Less complexity, more efficiency
- \+ Designed for modern automation needs

Did your check reveal that the necessary hardware components are not available?

Please note that further modules will be available at a later date.

For example, IO-link and energy meter modules, communication modules (PROFIBUS, CAN), and weighing modules are currently in the development process and will enrich the portfolio in the future.

There are certain technical workarounds to implement alternative solutions. For urgent requests, please get in touch with your contact person via this contact database.

SIEMENS

Step 3

Check Software Compatibility & Migration

SIMATIC S7-1200 G2 offers high software compatibility with S7-1200 and includes several modernized software elements. Ensure that you are using the latest version of TIA Portal (at least TIA Portal V20) to fully support all SIMATIC S7-1200 G2 functions and components.

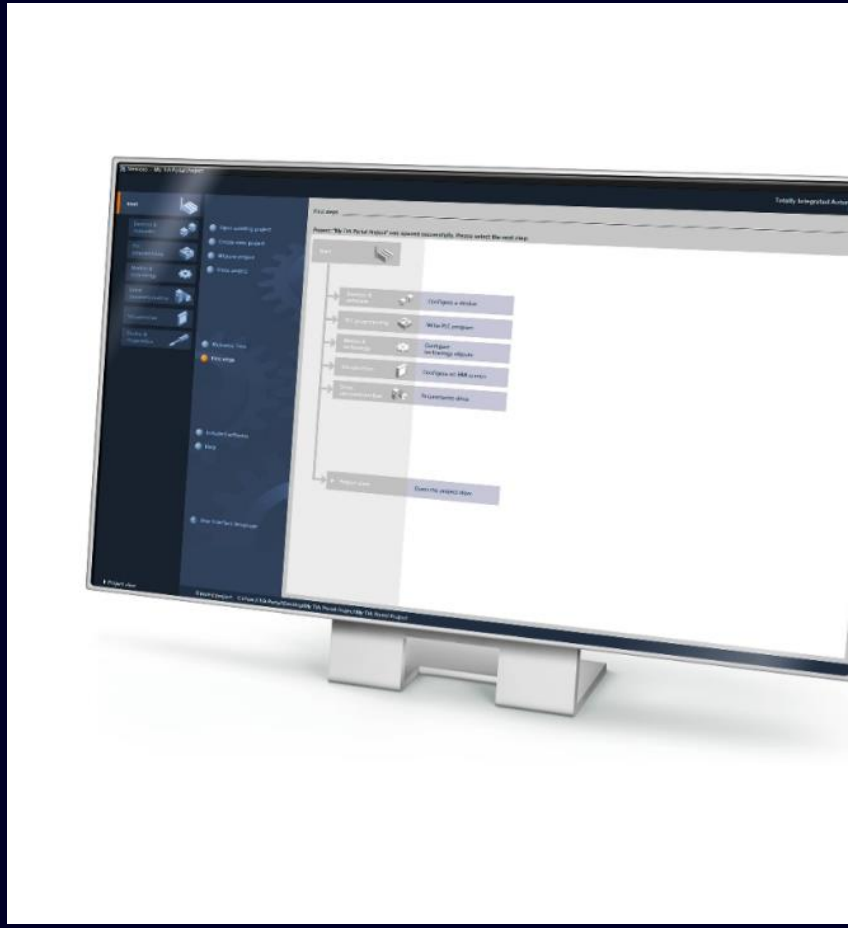

SIEMENS

Step 3: Check Software Compatibility & Migration
Choose one options (A or B)

A | Check the software compatibility and migrate manually

☐ **Check the differences between S7-1200 and S7-1200 G2 in supported software features on this page**

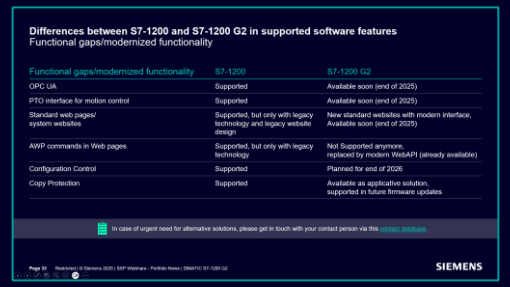

☐ **Convert the project manually by following the steps described on this page**

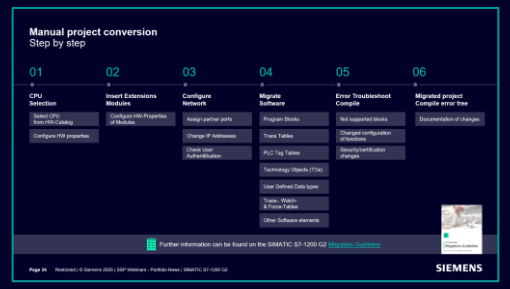

For project preparation und software upgrade see also SIMATIC S7-1200 G2 Migration Guideline

B | Download and install the Migration Tool for TIA Portal (TIA Add-In)

☐ **Perform automatic software compatibility check & migration:**

- The tool performs automatic project migration of hardware and/or software elements with detailed migration reports
- Once the migration tool has been successfully executed, some manual steps may still need to be performed, depending on the project content



The SIMATIC S7-1200 G2 migration tool consists of

1. **Migration Checker** (checks hardware/software compatibility)
2. **Migration Tool** (performs automatic hardware/software migration)

SIMATIC S7-1200 G2 Migration Tool

- Lists recommendations for the migration of S7-1200
- Performs automatic project migration of hardware and software elements
- Generates detailed log-files with issues and recommendations

The download for the tool and further information, including explanatory videos and the detailed migration guideline can be found on SiePortal.

SIEMENS

Differences between S7-1200 and S7-1200 G2 in supported software features
Functional gaps/modernized functionality

Functional gaps/modernized functionality	S7-1200	S7-1200 G2
OPC UA	Supported	Available
PTO interface for motion control	Supported	Available
Standard web pages/ system websites	Supported, but only with legacy technology and legacy website design	New standard websites with modern interface
AWP commands in Web pages	Supported, but only with legacy technology	Not Supported anymore, replaced by modern WebAPI
Configuration Control	Supported	Planned for end of 2026
Copy Protection	Supported	Planned for end of 2026

In case of urgent need for alternative solutions, please get in touch with your contact person via this contact database.

SIEMENS

Manual project conversion
Step by step

01 CPU Selection

- Select CPU from HW-Catalog
- Configure HW properties

02 Insert Extensions Modules

- Configure HW-Properties of Modules

03 Configure Network

- Assign partner ports
- Change IP Addresses
- Check security settings

04 Migrate Software

- Program Blocks
- Trace Tables
- PLC Tag Tables
- Technology Objects (TOs)
- User Defined Data types
- Trace-, Watch- & Force-Tables
- Other Software elements

05 Error Troubleshoot Compile

- Not supported blocks
- Changed configuration of functions
- Security/certification changes

06 Migrated project Compile error free

- Documentation of changes

Further information can be found on the SIMATIC S7-1200 G2 Migration Guideline



SIEMENS

Step 3: Check Software Compatibility & Migration
Overview and advantages

SIMATIC S7-1200



Make sure that you have installed TIA Portal V20 (or higher), check the software functions you are using and migrate your project

- ☑ manually, or
- ☑ with the help of the SIMATIC S7-1200 G2 migration tool

before carrying out the final manual steps to complete the migration.

SIMATIC S7-1200 G2



Your benefits:

- Modernized architecture in SIMATIC S7-1200 G2
- High software compatibility across the SIMATIC portfolio
- Improved scalability with enhanced motion control and simulation functions
- Common engineering libraries for streamlined development

For software migration, it is advisable to always refer to the Migration Guideline.

For software functions that will be available at a later point of time, it is recommended to already prepare for migration accordingly up to this step.

In individual cases, technical workarounds are already available today. For urgent requests, please get in touch with your contact person via this contact database.

SIEMENS

Content

01 | Information about the Product Phase-out of SIMATIC S7-1200 and portfolio roadmap

02 | Why you should Migrate to SIMATIC S7-1200 G2

03 | Migrate to S7-1200 G2 in 3 Easy Steps

03.1 | Step 1: Check Installation

03.2 | Step 2: Check Hardware Availability

03.3 | Step 3: Check Software Compatibility & Migration

04 | Demo – SIMATIC S7-1200 G2 Migration Tool

Appendix

A01 | Overview CPU Migration

A02 | Migration Recommendation – from S7-1200 to S7-1200 G2

A03 | Order Information – SIMATIC S7-1200 G2 Components

A04 | Operating Temperature Comparison

SIEMENS

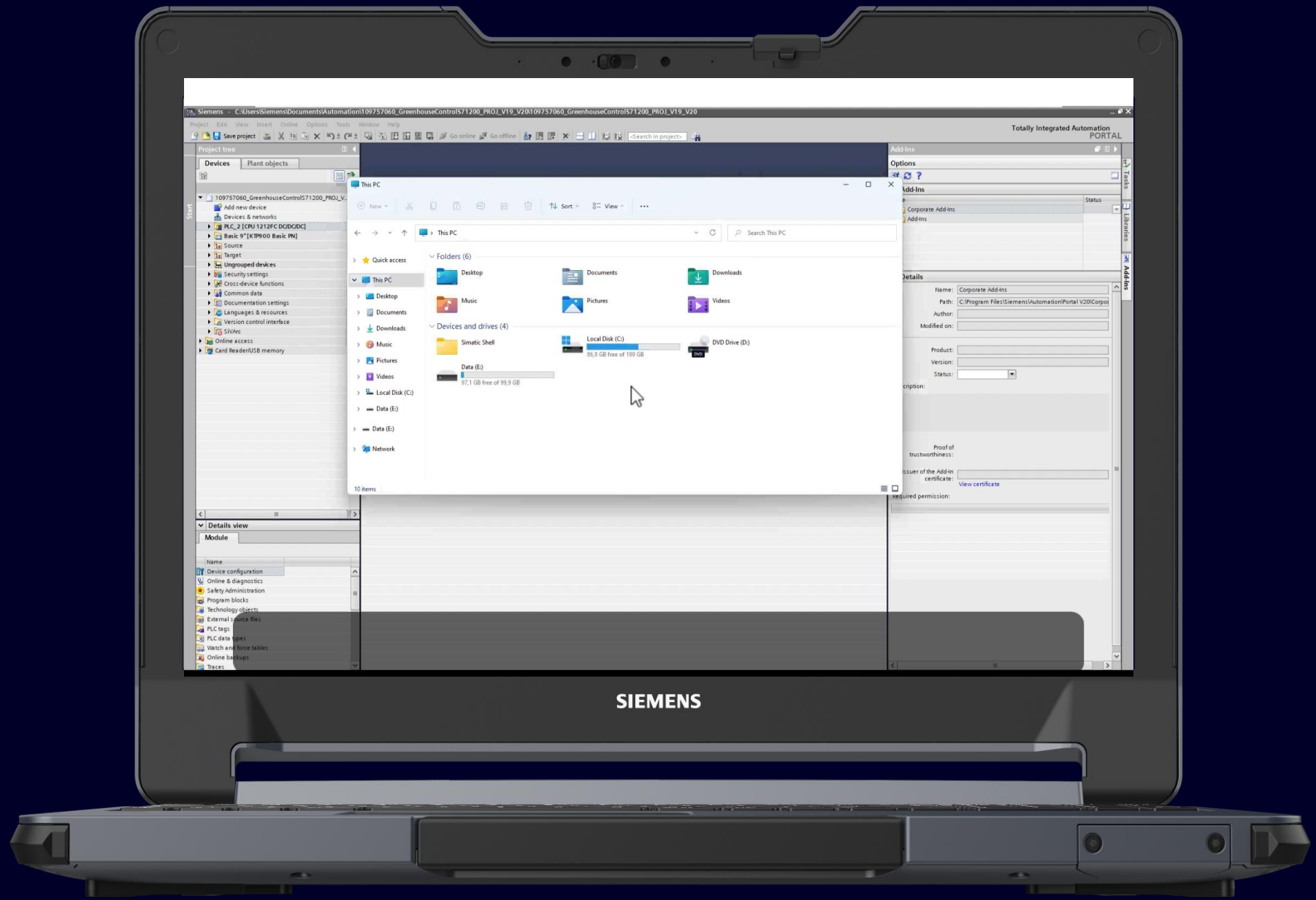
Totally Integrated Automation
PORTAL
Project tree
Devices
Plant objects
Add-Ins
Options
This PC
Folders (6)
Desktop
Documents
Downloads
Music
Pictures
Videos
Devices and drives (4)
Simatic Shell
Local Disk (C:)
86,8 GB free of 199 GB
DVD Drive (D:)
Data (E:)
97,1 GB free of 99,9 GB
Details view
Module
SIEMENS

SIEMENS

SIMATIC

S7-1200 G2

Migration overview

Appendix



Unrestricted © Siemens 2026 | SIMATIC S7-1200 G2 Migration overview

SIEMENS

Content

01 | Information about the Product Phase-out of SIMATIC S7-1200 and portfolio roadmap

02 | Why you should Migrate to SIMATIC S7-1200 G2

03 | Migrate to S7-1200 G2 in 3 Easy Steps

03.1 | Step 1: Check Installation

03.2 | Step 2: Check Hardware Availability

03.3 | Step 3: Check Software Compatibility & Migration

04 | Demo – SIMATIC S7-1200 G2 Migration Tool

Appendix

A01 | Overview CPU Migration

A02 | Migration Recommendation – from S7-1200 to S7-1200 G2

A03 | Order Information – SIMATIC S7-1200 G2 Components

A04 | Operating Temperature Comparison

SIEMENS

Migration option
SIMATIC S7-1200 to SIMATIC S7-1200 G2: CPU 1212

S7-1200

CPU Type	CPU 1211C	CPU 1212C	CPU 1212FC
Interfaces			
Program memory/data memory	75 kB	100 kb	150 kB
Bit performance (ns)	85	85	85
Integrated DI/DO	6/4	8/6	8/6
Integrated AI/AO	2/-	2/-	2/-
HSC	6	6	6
Width (mm)	90	90	90

S7-1200 G2

CPU 1212C	CPU 1212FC
	
150/500 kB	200/500 kB
37	37
8/6	8/6
Optional SB	Optional SB
8	8
70	70

SIMATIC S7-1200 G2: Installation Guideline

PROFINET/IE

SIEMENS

Migration option
SIMATIC S7-1200 to SIMATIC S7-1200 G2: CPU 1214

S7-1200

CPU Type	CPU 1214C	CPU 1214FC	CPU 1215C	CPU 1215FC	CPU 1217C
Interfaces					
Program memory/data memory	150 kB	200 kB	200 kB	250 kB	250 kB
Bit performance (ns)	85	85	85	85	85
Integrated DI/DO	14/10	14/10	14/10	14/10	14/10
Integrated AI/AO	2/-	2/-	2/2	2/2	2/2
HSC	6	6	6	6	6
Width (mm)	110	110	130	130	150

S7-1200 G2

CPU 1214C	CPU 1214FC
	
250/750 kB	300/750 kB
37	37
14/10	14/10
Optional SB	Optional SB
8	8
80	80

SIMATIC S7-1200 G2: Installation Guideline

PROFINET/IE

SIEMENS

Content

01 | Information about the Product Phase-out of SIMATIC S7-1200 and portfolio roadmap

02 | Why you should Migrate to SIMATIC S7-1200 G2

03 | Migrate to S7-1200 G2 in 3 Easy Steps

03.1 | Step 1: Check Installation

03.2 | Step 2: Check Hardware Availability

03.3 | Step 3: Check Software Compatibility & Migration

04 | Demo – SIMATIC S7-1200 G2 Migration Tool

Appendix

A01 | Overview CPU Migration

A02 | Migration Recommendation – from S7-1200 to S7-1200 G2

A03 | Order Information – SIMATIC S7-1200 G2 Components

A04 | Operating Temperature Comparison

SIEMENS

Power supply

S7-1200	
Designation	Order number
PM1207/1AC/DC24V/2.5A	6EP1332-1SH71



S7-1200 G2	
Order number	Designation
6EP3333-4SB00-3AX0	PM 1207/1AC/DC24V/5 A
6EP3333-4SC00-3AX0	PM 1207/1AC/DC24V/5 A (Ex)

Recommended Successor
Alternative Successor

Unrestricted © Siemens 2026 | SIMATIC S7-1200 G2 Migration overview

CPU modules „small“



S7-1200	
Designation	Order number
CPU 1211C, DC/DC/DC, 6DI/4DO/2AI	6ES7211-1AE40-0XB0
CPU 1211C, AC/DC/Relays, 6DI/4DO/2AI	6ES7211-1BE40-0XB0
CPU 1211C, DC/DC/Relays, 6DI/4DO/2AI	6ES7211-1HE40-0XB0
CPU 1212C, DC/DC/DC, 8DI/6DO/2AI	6ES7212-1AE40-0XB0
CPU 1212C, AC/DC/Relays, 8DI/6DO/2AI	6ES7212-1BE40-0XB0
CPU 1212C, DC/DC/Relays, 8DI/6DO/2AI	6ES7212-1HE40-0XB0

S7-1200 G2	
Order number	Designation
6ES7212-1AG50-0XB0	CPU 1212C, DC/DC/DC, 8DI/6DO
6ES7212-1BG50-0XB0	CPU 1212C, AC/DC/Relays, 8DI/6DO
6ES7212-1HG50-0XB0	CPU 1212C, DC/DC/Relays, 8DI/6DO

SIMATIC S7-1200: CPU 1211C - Wiring diagrams
CPU 1212C - Wiring diagrams

SIMATIC S7-1200 G2: CPU 1212C - Wiring diagrams

Recommended Successor
Alternative Successor

Unrestricted © Siemens 2026 | SIMATIC S7-1200 G2 Migration overview

SIEMENS

CPU modules „large“



S7-1200	
Designation	Order number
CPU 1214C, DC/DC/DC, 14DI/10DO/2AI	6ES7214-1AG40-0XB0
CPU 1214C, AC/DC/Relays, 14DI/10DO/2AI	6ES7214-1BG40-0XB0
CPU 1214C, DC/DC/Relays, 14DI/10DO/2AI	6ES7214-1HG40-0XB0
CPU 1215C, DC/DC/DC, 14DI/10DO/2AI/2AO	6ES7215-1AG40-0XB0
CPU 1215C, AC/DC/Relays, 14DI/10DO/2AI/2AO	6ES7215-1BG40-0XB0
CPU 1215C, DC/DC/Relays, 14DI/10DO/2AI/2AO	6ES7215-1HG40-0XB0
CPU 1217C, DC/DC/DC, 14DI/10DO/2AI/2AO	6ES7217-1AG40-0XB0

S7-1200 G2	
Order number	Designation
6ES7214-1AH50-0XB0	CPU 1214C, DC/DC/DC, 14DI/10DO
6ES7214-1BH50-0XB0	CPU 1214C, AC/DC/Relays, 14DI/10DO
6ES7214-1HH50-0XB0	CPU 1214C, DC/DC/Relays, 14DI/10DO

SIMATIC S7-1200: CPU 1214C - Wiring diagrams
CPU 1215C - Wiring diagrams
CPU 1217C - Wiring diagrams

SIMATIC S7-1200 G2: CPU 1214C - Wiring diagrams

Recommended Successor
Alternative Successor

Unrestricted © Siemens 2026 | SIMATIC S7-1200 G2 Migration overview

SIEMENS

CPU modules „fail-safe“



S7-1200	
Designation	Order number
CPU 1212FC, DC/DC/DC, 8DI/6DO/2AI	6ES7212-1AF40-0XB0
CPU 1212FC, DC/DC/Relays, 8DI/6DO/2AI	6ES7212-1HF40-0XB0
CPU 1214FC, DC/DC/DC, 14DI/10DO/2AI	6ES7214-1AF40-0XB0
CPU 1214FC, DC/DC/Relays, 14DI/10DO/2AI	6ES7214-1HF40-0XB0
CPU 1215FC, DC/DC/DC, 14DI/10DO/2AI/2AO	6ES7215-1AF40-0XB0
CPU 1215C, DC/DC/Relays, 14DI/10DO/2AI/2AO	6ES7215-1HF40-0XB0

S7-1200 G2	
Order number	Designation
6ES7212-1AF50-0XB0	CPU 1212FC, DC/DC/DC, 8DI/6DO
6ES7212-1HF50-0XB0	CPU 1212FC, DC/DC/Relays, 8DI/6DO
6ES7214-1AF50-0XB0	CPU 1214FC, DC/DC/DC, 14DI/10DO
6ES7214-1HF50-0XB0	CPU 1214FC, DC/DC/Relays, 14DI/10DO

SIMATIC S7-1200: CPU 1214FC - Wiring diagrams
CPU 1215FC - Wiring diagrams

SIMATIC S7-1200 G2: CPU 1212FC - Wiring diagrams
CPU 1214FC - Wiring diagrams

Recommended Successor
Alternative Successor

Unrestricted © Siemens 2026 | SIMATIC S7-1200 G2 Migration overview

SIEMENS

Digital signal boards



S7-1200	
Designation	Order number
SB 1221, 4 DI 24VDC	6ES7221-3BD30-0XB0
SB 1221, 4 DI 5VDC	6ES7221-3AD30-0XB0
SB1222, 4 DO 24VDC	6ES7222-1BD30-0XB0
SB1222, 4 DQ 5VDC	6ES7222-1AD30-0XB0
SB1223, 2 DI/2 DO 24VDC	6ES7223-0BD30-0XB0
SB 1223, 2 DI/2 DO 24VDC	6ES7223-3BD30-0XB0
SB 1223, 2 DI/2 DO 5VDC	6ES7223-3AD30-0XB0

S7-1200 G2	
Order number	Designation
6ES7221-3BF50-0XB0	SB 1221, 8 DI 24VDC
6ES7222-1BF50-0XB0	SB 1222, 8 DO 24VDC
6ES7223-7AF50-0XB0	SB 1223 4 DI / 4 DO 5VDC
6ES7223-7BF50-0XB0	SB 1223 4 DI / 4 DO 24VDC

Recommended Successor
Alternative Successor

Unrestricted © Siemens 2026 | SIMATIC S7-1200 G2 Migration overview

SIEMENS

Analog signal boards / battery board



S7-1200	
Designation	Order number
Signal Board SB 1231, 1 AI	6ES7231-4HA30-0XB0
Signal Board SB 1232, 1 AO	6ES7232-4HA30-0XB0
Signal Board SB 1231 RTD, 1 AI RTD	6ES7231-5PA30-0XB0
Signal Board SB 1231 TC, 1 AI TC	6ES7231-5QA30-0XB0

S7-1200 G2	
Order number	Designation
6ES7231-4HD50-0XB0	Signal Board SB 1231, 4 AI
6ES7232-4HD50-0XB0	Signal Board SB 1232, 4 AO
6ES7233-4HD50-0XB0	Signal Board SB 1233, 2 AI /2 AO
6ES7231-5PB50-0XB0	Signal Board SB 1231 RTD, 2 AI RTD
6ES7231-5QD50-0XB0	Signal Board SB 1231 TC, 4 AI TC



Battery Board BB 1297	6ES7297-0AX30-0XA0

6ES7297-4AX50-0XA0	Battery Board BB 1297

Recommended Successor
Alternative Successor

Unrestricted © Siemens 2026 | SIMATIC S7-1200 G2 Migration overview

SIEMENS

Digital signal modules
Digital input, digital output



S7-1200	
Designation	Order number
Digital input SM 1221, 8 DI, 24V DC	6ES7221-1BF32-0XB0
Digital input SM 1221, 16 DI, 24V DC	6ES7221-1BH32-0XB0
Digital output SM 1222, 8 DO, Changeover	6ES7222-1XF32-0XB0
Digital output SM1222, 16 DO, Relays	6ES7222-1HH32-0XB0
Digital output SM1222, 8 DO, 24V DC	6ES7222-1BF32-0XB0
Digital output SM1222, 16 DO, 24V DC	6ES7222-1BH32-0XB0

S7-1200 G2	
Order number	Designation
6ES7221-1BH50-0XB0	Digital input SM 1221, 16 DI, 24V DC
6ES7222-5HH50-0XB0	Digital output SM1222, 16 DO, Relays
6ES7222-5BH50-0XB0	Digital output SM1222, 16 DO, 24V DC

Recommended Successor
Alternative Successor

Unrestricted © Siemens 2026 | SIMATIC S7-1200 G2 Migration overview

SIEMENS

Digital signal modules
Digital input / output (incl. fail-safe)



S7-1200		S7-1200 G2	
Designation	Order number	Order number	Designation
Digital I/O SM 1223, 8DI/8DO, 24V DC/RLY	6ES7223-1PH32-0XB0	6ES7223-5PH50-0XB0	Digital I/O SM 1223, 8DI/8DO, 24V DC/RLY
Digital I/O SM 1223, 8DI/8DO 24VDC	6ES7223-1BH32-0XB0	6ES7223-5BH50-0XB0	Digital I/O SM 1223, 8DI/8DO 24VDC
Digital I/O SM 1223, 16DI/16DO	6ES7223-1BL32-0XB0	6ES7223-5BL50-0XB0	Digital I/O SM 1223, 16DI 24VDC / 16DO 24VDC
Digital I/O SM 1223, 16DI/16DO sink	6ES7223-1BL32-1XB0	6ES7223-5BL50-1XB0	Digital I/O SM 1223, 16DI 24VDC / 16DO 24VDC sink
Digital I/O SM 1223, 16DI/16DO Relay	6ES7223-1PL32-0XB0	6ES7223-5PL50-0XB0	Digital I/O SM 1223, 16DI 24VDC / 16DO Relay
Digital input SM 1226, F-DI 16X 24 V DC	6ES7226-6BA32-0XB0	6ES7226-6ME50-0XB0	Digital I/O SM1226, F-DI 4/F-DQ 2/DI 2
Digital output SM 1226, F-DQ 4x 24 V DC 2A	6ES7226-6DA32-0XB0		



Recommended Successor
Alternative Successor

Unrestricted © Siemens 2026 | SIMATIC S7-1200 G2 Migration overview

SIEMENS

Analog signal modules



S7-1200	
Designation	Order number
Analog input SM 1231, 4 AI	6ES7231-4HD32-0XB0
Analog input SM 1231, 8 AI	6ES7231-4HF32-0XB0
Analog output SM 1232, 2 AO	6ES7232-4HB32-0XB0
Analog output SM 1232, 4 AO	6ES7232-4HD32-0XB0
Analog I/O SM 1234, 4 AI/2 AO	6ES7234-4HE32-0XB0
Analog input SM 1231 RTD, 4 AI	6ES7231-5PD32-0XB0
Analog input SM 1231 RTD, 8 AI	6ES7231-5PF32-0XB0
Analog input SM 1231 TC, 4 AI	6ES7231-5QD32-0XB0
Analog input SM 1231 TC, 8 AI	6ES7231-5QF32-0XB0

S7-1200 G2	
Designation	Order number
6ES7231-4HF50-0XB0	Analog input SM 1231, 8 AI
6ES7232-4HF50-0XB0	Analog output SM 1232, 8 AO
6ES7233-4HF50-0XB0	Analog I/O SM 1234, 4 AI/4 AO
6ES7231-5PD50-0XB0	Analog input SM 1231 RTD, AI 4x RTD
6ES7231-5QF50-0XB0	Analog input SM 1231 TC, AI 8x TC

Recommended Successor
Alternative Successor

Unrestricted © Siemens 2026 | SIMATIC S7-1200 G2 Migration overview

SIEMENS

Communication boards / modules
Communication processors



S7-1200	
Designation	Order number
Communication Board CB 1241, RS485	6ES7241-1CH30-1XB0
Communication Module CM 1241, RS232	6ES7241-1AH32-0XB0
Communication Module CM 1241, RS422/485	6ES7241-1CH32-0XB0
Compact Switch Module CSM 1277	6GK7277-1AA10-0AA0

S7-1200 G2	
Designation	Order number
6ES7241-1CA50-0XB0	Communication Board CB 1241, RS485
6ES7241-1EA50-0XB0	Communication Module CM 1241, RS232/422/485
6GK7277-1AA50-0AA0	Compact Switch Module CSM 1277



Communication Processor CP 1243-1	6GK7243-1BX30-0XE0

6GK7243-1BX50-0XE0	Communication Processor CP 1243-1 (Ethernet, DNP3)

Recommended Successor
Alternative Successor

Unrestricted © Siemens 2026 | SIMATIC S7-1200 G2 Migration overview

SIEMENS

Content

01 | Information about the Product Phase-out of SIMATIC S7-1200 and portfolio roadmap

02 | Why you should Migrate to SIMATIC S7-1200 G2

03 | Migrate to S7-1200 G2 in 3 Easy Steps

03.1 | Step 1: Check Installation

03.2 | Step 2: Check Hardware Availability

03.3 | Step 3: Check Software Compatibility & Migration

04 | Demo – SIMATIC S7-1200 G2 Migration Tool

Appendix

A01 | Overview CPU Migration

A02 | Migration Recommendation – from S7-1200 to S7-1200 G2

A03 | Order Information – SIMATIC S7-1200 G2 Components

A04 | Operating Temperature Comparison

SIEMENS

SIMATIC S7-1200 G2
Available CPUs

CPU models		Order number
CPU 1212C	CPU 1212C AC/DC/RLY	6ES7212-1BG50-0XB0
	CPU 1212C DC/DC/DC	6ES7212-1AG50-0XB0
	CPU 1212C DC/DC/RLY	6ES7212-1HG50-0XB0
CPU 1214C	CPU 1214C AC/DC/RLY	6ES7214-1BH50-0XB0
	CPU 1214C DC/DC/DC	6ES7214-1AH50-0XB0
	CPU 1214C DC/DC/RLY	6ES7214-1HH50-0XB0



Fail-safe CPU models		Order number
CPU 1212FC	CPU 1212FC DC/DC/DC	6ES7212-1AF50-0XB0
	CPU 1212FC DC/DC/RLY	6ES7212-1HF50-0XB0
CPU 1214FC	CPU 1214FC DC/DC/DC	6ES7214-1AF50-0XB0
	CPU 1214FC DC/DC/RLY	6ES7214-1HF50-0XB0



SIEMENS

SIMATIC S7-1200 G2
Available inputs and outputs

Signal modules		Order number
Digital Input	SM 1221 16 x 24 V DC Input	6ES7221-1BH50-0XB0
Digital Output	SM 1222 16 x 24 V DC Output	6ES7222-5BH50-0XB0
	SM 1222 16 x RLY Output	6ES7222-5HH50-0XB0
Digital Input / Output	SM 1223 8 x 24 V DC Input/ 8 x 24 V DC Output	6ES7223-5BH50-0XB0
	SM 1223 8 x 24 V DC Input/ 8 x RLY Output	6ES7223-5PH50-0XB0
	SM 1223 16 x 24 V DC Input / 16 x 24 V DC Output	6ES7223-5BL50-0XB0
	SM 1223 16 x 24 V DC Input / 16 x 24 V DC Sink	6ES7223-5BL50-1XB0
	SM 1223 16 x 24 V DC Input / 16 x 24 V DC Relay	6ES7223-5PL50-0XB0
Analog Input	SM 1231 8 x Analog Input	6ES7231-4HF50-0XB0
Analog Output	SM 1232 8 x Analog Output	6ES7232-4HF50-0XB0
Analog Input / Output	SM 1233 4 x Analog Input/ 4 x Analog Output	6ES7233-4HF50-0XB0
Analog Input	SM 1231 4x Analog Input RTD	6ES7231-5PD50-0XB0
Analog Input	SM 1231 8x Analog Input TC	6ES7231-5QF50-0XB0
Failsafe Input / Output	SM1226, F-DI 4/F-DQ 2/DI 2	6ES7226-6ME50-0XB0





SIEMENS

SIMATIC S7-1200 G2
Available inputs and outputs

Signal boards		Order number
Digital Input	SB 1221 100kHz 8 x 24 V DC Input	6ES7221-3BF50-0XB0
Digital Output	SB 1222 100kHz 8 x 24 V DC Output	6ES7222-5BF50-0XB0
Digital Input / Output	SB 1223 100kHz 4 x 24 V DC Input/ 100kHz 4 x 24 V DC Output	6ES7223-7BF50-0XB0
	SB 1223 200kHz 4 x 5 V DC Input/ 200kHz 4 x 5 V DC Output	6ES7223-7AF50-0XB0
Analog Input	SB 1231 4 x Analog Input	6ES7231-4HD50-0XB0
Analog Output	SB 1232 4 x Analog Output	6ES7232-4HD50-0XB0
Analog Input / Output	SB 1233 2 x Analog Input/ 2 x Analog Output	6ES7233-4HD50-0XB0
Analog Input RTD	SB 1231 2 x Analog Input RTD	6ES7231-5PB50-0XB0
Analog Input TC	SB 1231 4 x Analog Input TC	6ES7231-5QD50-0XB0
Battery Board	BB 1297	6ES7297-4AX50-0XA0



SIEMENS

SIMATIC S7-1200 G2
Available communication modules

Communication modules / processors

Communication modules / processors		Order number
CB 1241	Communication Board, RS485	6ES7241-1CA50-0XB0
CM 1241	Communication Module, RS232/422/485	6ES7241-1EA50-0XB0
CP 1243-1	Communication Processor, Ethernet / DNP3	6GK7243-1BX50-0XE0



Compact Switch Module

Compact Switch Module		Order number
CSM 1277	Compact Switch Module	6GK7277-1AA50-0AA0



SIEMENS

SIMATIC S7-1200 G2
Available power supply / programming software

Power supply

Power supply		Order number
Power Supply	PM 1207, S7-1200 G2 with EX/ ATEX certification	6EP3333-4SC00-3AX0
	PM 1207, S7-1200 G2 without EX/ ATEX certification	6EP3333-4SB00-3AX0



Programming software

SIMATIC software		Order number
Programming Software	STEP 7 Basic V21	6ES7822-0AE25-0YA5
	STEP 7 Professional V21	6ES7822-1AE25-0YA5

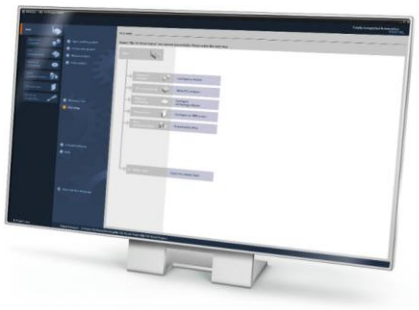

TIA Portal

SIEMENS

Content

01 | Information about the Product Phase-out of SIMATIC S7-1200 and portfolio roadmap

02 | Why you should Migrate to SIMATIC S7-1200 G2

03 | Migrate to S7-1200 G2 in 3 Easy Steps

03.1 | Step 1: Check Installation

03.2 | Step 2: Check Hardware Availability

03.3 | Step 3: Check Software Compatibility & Migration

04 | Demo – SIMATIC S7-1200 G2 Migration Tool

Appendix

A01 | Overview CPU Migration

A02 | Migration Recommendation – from S7-1200 to S7-1200 G2

A03 | Order Information – SIMATIC S7-1200 G2 Components

A04 | Operating Temperature Comparison

SIEMENS

Operating Temperature Horizontal. All Q Active.



55 deg C



40 deg C

Operating Temperature Horizontal. Alternate Q Active.



60 deg C



60 deg C

*Relay outputs must be alternate

**DC outputs can be derated

SIEMENS

Operating Temperature Vertical. All Q Active.



45 deg C



40 deg C

*only DC/DC/DC
Relay not possible

Operating Temperature Vertical. Alternate Q Active.



50 deg C



50 deg C

*Relay outputs must be alternate

**DC outputs can be derated

SIEMENS

Example

For a S7-1200 G2 CPU 1212C DC/DC/DC in a vertical position, operation can be done at up to 50 degrees C if the following conditions are met:

1. Maximum of 500mA expansion module supply is used of the 1000mA available (5vDC)
2. Maximum of 150mA sensor supply is used of the available 300mA (24vDC)
3. Maximum of 250mA used of the 0.5A available for output signaling (1A of the 2A possible for relay outputs).
4. Only alternate inputs and/or outputs are switched.

If any of the above points is exceeded, then you are limited to 40 degrees C in a vertical position.

	G1	G2	Difference	Notes
Horizontal (All IO)	**50**	**40**	**-10**	**Derating applies to IO switching on G1 but includes further parameters on G2. Can be 55 deg depending upon module.**
Horizontal (Alternate IO)	**60**	**60**	**0**	**Derating applies to IO switching on G1 but includes further parameters on G2. Can be 55 deg depending upon module.**
Vertical (All IO)	**45**	**40**	**-5**	**G2 module dependant de-rating - G1 not applicable due to differing standards.**
Vertical (Alternate IO)	**50**	**50**	**0**	



Note: Always check the user manual under “General specifications and features” of the respective CPU

SIEMENS

Disclaimer

© Siemens 2026

Subject to changes and errors. The information given in this document only contains general descriptions and/or performance features which may not always specifically reflect those described, or which may undergo modification in the course of further development of the products. The requested performance features are binding only when they are expressly agreed upon in the concluded contract.

All product designations may be trademarks or other rights of Siemens AG, its affiliated companies or other companies whose use by third parties for their own purposes could violate the rights of the respective owner.